THE CITY OF
SAN MARCOS

ELECTRIC UTILITIES
UNDERGROUND INSTALLATION SPECIFICATIONS

Effective Date: October 1, 2010

TABLE OF CONTENTS

1. CONTACTS: CITY OF SAN MARCOS
2. PUBLIC SERVICES-ELECTRIC UTILITY SERVICE AREA BOUNDARY
3 & 4. URD SPECS: OWNER/CONTRACTOR FURNISHED, INSTALLED AND MAINTAINED MATERIALS
5. STREET LIGHTING; WITHIN SAN MARCOS CITY LIMITS
6. URD CONDUIT PHASING LAYOUT
7. METER LOOP, TEMPORARY CONSTRUCTION
8. METER LOOP, CLEARANCES
9. METER LOOP, 1 TELEPHONE PHASE, 1 METER (CUSTOMER FURNISHED)
10. METER LOOP, 1 PHASE, 2 METERS (CUSTOMER FURNISHED)
11. RISER, 1 PHASE, 3" CONDUIT
12. RISER, 3 PHASE, 3" CONDUIT
13. RISER, 3 PHASE, 4" CONDUIT
14. RISER, 3 PHASE, 3" or 4" CONDUIT; METAL POLE
15. CROSSING SMEU URD, BY OTHER UTILITIES
16. URD, 1 PHASE, 25 - 167 KVA XFMR
17. URD, 1 PHASE, 25 - 167 KVA XFMR, CT METERED
18. URD, 3 PHASE, 75 -112.5 KVA XFMR
19. URD, 3 PHASE, 225 – 300 KVA XFMR
20. URD, 3 PHASE, 500 KVA XFMR
21. URD, 3 PHASE, 500 KVA FEED THRU XFMR
22. URD, 3 PHASE, 750 – 1500 KVA XFMR
23. URD, I PHASE, ENCLOSURE PAD
24. URD, 1 PHASE, ENCLOSURE PAD & 25 – 167 KVA XFMR
25. URD, 1 PHASE, ENCLOSURE PAD (SIDE MOUNT) & 25 – 167 KVA XFMR
26. URD, 3 PHASE, 72" ENCLOSURE, (3ea.) 3" CONDUIT
27. URD, 3 PHASE, 72" ENCLOSURE, (4ea.) 3" CONDUIT
28. URD, 3 PHASE ENCLOSURE & I PHASE XFMR
29. PADMOUNT ENCLOSURES CLEARANCES
30. URD, 1 PHASE, XFMR & CUSTOMER FURNISHED METER PEDESTAL
31. URD, CUSTOMER'S METER PEDESTAL & PAD SPECS.
32. URD SMEU XFMR & OTHER UTILITIES CLEARANCES
33. URD XFMR, CT METERING SPECS.
34. URD, CUSTOMER'S JUNCTION BOX SPECS.
35. STREET LIGHT, BASE MOUNT SPECS.
36. STREET LIGHT, STEEL POLE SPECS.
37. STREET LIGHT, Antique (HADCO)
38. APPENDIX

CITY OF SAN MARCOS

Telephone Contacts

ELECTRIC UTILITIES	
Wade Hudson	512-393-8314
(Electrical Engineering Technician)	
Rumaldo Rodriguez	512-393-8335
(Electrical Engineering Technician)	
Megan Willis	512-393-8307
(Electrical Engineering Technician)	
Lou White	512-393-8304
(Senior Electrical Engineer)	
Ronnie LaCaze	512-393-8306
(Electrical Distribution Manager)	
ELECTRIC UTILITIES	512-393-8300
24-Hour Emergency Line	512-393-8313
UTILITY BILLING	512-393-8383
PERMIT CENTER (Permits & Building Inspections)	512-393-8230
CAPITAL IMPROVEMENTS	512-393-8130
TRANSPORTATION	512-393-8036
24-Hour Emergency Line	512-393-8036
SOLID WASTE	512-393-8026
WATER/WASTEWATER	512-393-8010
24-Hour Emergency Line	512-393-8010
CITY-MAIN SWITCHBOARD	512-393-8000

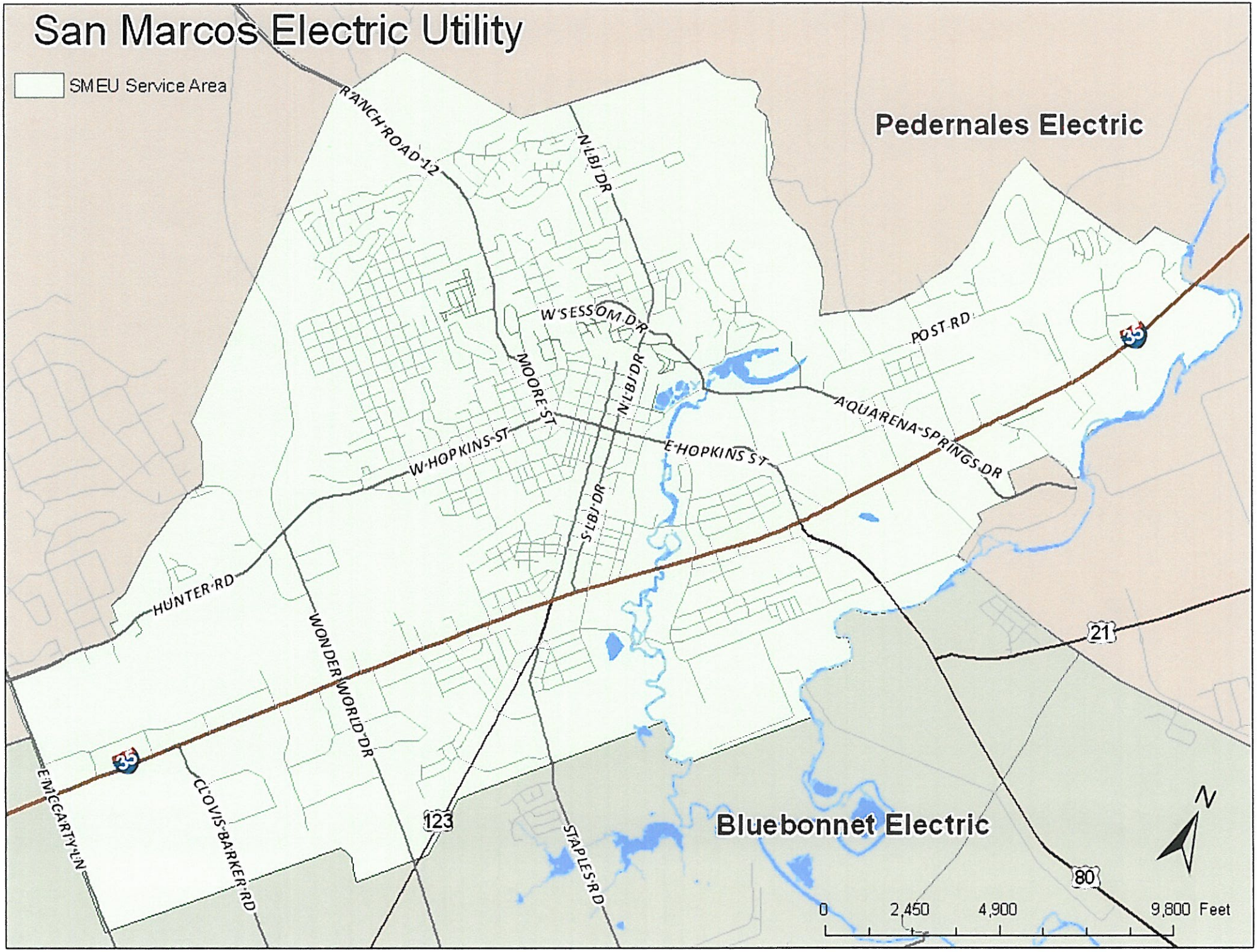
San Marcos Electric Utility
SMEU Service Area
Pedernales Electric
Bluebonnet Electric
RANCH ROAD 12
N LBJ DR
W SESSOM DR
MOORE ST
N LBJ DR
W HOPKINS ST
E HOPKINS ST
POST RD
AQUARENA SPRINGS DR
S LBJ DR
HUNTER RD
WONDERWORLD DR
CLOVIS BARKER RD
E MCCARTY LN
STAPLES RD
35
21
123
80
N
0
2,450
4,900
9,800 Feet

San Marcos Electric Utilities URD Specifications

A. Inspections: Schedule on site inspections with electrical engineering technician prior to pouring concrete and/or backfills.

B. Transformers: An electric transformer cost recovery fee must be paid for new or upgraded residential, commercial, industrial, or institutional electric service. The electric transformer cost recovery fee shall be set at the purchase price paid by the San Marcos Electric Utility (SMEU) for each transformer. The fee will be waived if a developer furnishes, at its own expense, transformers that meet SMEU's specifications. SMEU will become the owner of the transformer at the time of installation. Transformer sizing will be determined by SMEU staff or a representative acting on SMEU's behalf.

C. Pedestal; Meter: SMEU furnished; pedestal cost recovery fee must be paid for new or upgraded installations. Customer installed and maintained.

D. Owner/Contractor furnished and installed materials.

1. Concrete Pads: Concrete shall be a 1:2:4 mixture, minimum strength of 3,000 P.S.I. Steel reinforcement shall be #3 rebar on 12" spacing to stop 1" from sides and openings.

   Depth: Per specific pad specs (10" or 12")
   10" of which 5" shall be above final landscaped grade
   12" of which 6" shall be above final landscaped grade
   SMEU inspection required prior to pouring concrete.

2. Concrete Feed Thru Transformer Pads: All feed thru transformer pads to be designed by SMEU personnel at time of request.

3. Primary Pull Boxes: Required on primary runs over 300'

4. Conduit: 3" Schedule 40 (see conduit 90's)

5. Conduit Elbows: 3" Schedule 80, 36" radius, concrete encased

6. Ground Rods: 5/8" x 8' steel, copper clad

7. Pulling Cord: Mule Tape (3000 Ibs)

8. URD Secondary: All URD transformer secondary conduit, tap pedestals and wiring shall be customer furnished, installed and maintained to applicable City of San Marcos Codes.

9. Streetlights: URD infrastructure (Antique light fixtures, conduit, junction boxes, pole/arm and wiring to light fixture) shall be customer furnished and installed to SMEU materials specifications. SMEU to furnish & install standard light fixture and maintain accepted lighting system. Lighting shall be inspected and operational prior to SMEU acceptance. (See City Ordinance: Chapter7/Article4/Division1/Section 7.4.1.4u _Specific Street Standards)

10. Trench: 48" minimum depth; Place 6" of sand on bottom; pipe; 6" of sand on top of pipe; select backfill (no rocks, etc.); 3" wide red metallic warning tape on single phase lines and 6" wide red metallic warning tape on three phase lines (CAUTION-ELECTRIC LINE BURIED BELOW) 18" from top of trench; and cover with select backfill (no rocks, etc.)

11. Backfill: Clean; rock-free; Prior SMEU inspection required.

12. Road Crossing: 60" depth; Flowable red fill shall be used the entire length of crossing to stop 6" below final road grade; topped with 3" wide red metallic warning tape on single phase lines and 6" wide red metallic warning tape on three phase lines (CAUTION-ELECTRIC LINE BURIED BELOW).

13. Utility Crossing: Underground utilities crossing SMEU URD shall be 18" minimum above SMEU URD with a red concrete cover 6" deep and extending 5' from each side of utility and red warning tape at its crossing over SMEU URD. (See drawing #11)

Revised July, 2010

Street Lighting within San Marcos City Limits:

1. All street lighting requests shall be in a written form and include responsible customer name, billing and physical address, electric utilities account number, and active telephone contact number.

2. Requests in areas served by Authority Having Jurisdiction (*AHJ) other than San Marcos Electric Utilities (SMEU) and infrastructure (poles/transformers/underground service) is not in place; installation of infrastructure shall be at SMEU's discretion and customer's responsibility for all cost associated with providing and maintenance of service.

3. Requests in areas served by AHJ other than SMEU and existing overhead infrastructure do not require upgrades; Street lighting provided per SMEU specifications only (see #6).

4. Requests in areas served by AHJ other than SMEU and existing overhead infrastructure require upgrades; installation of additional infrastructure shall be at SMEU's discretion; customer shall be responsibility for all cost associated with providing and maintenance of service.

5. Requests in areas served by AHJ other than the SMEU and having existing underground infrastructure; street lighting shall be at SMEU's discretion; customer shall be responsible for all cost associated with providing and maintenance of service.

6. Developments by AHJ's within city limits shall install all street lightning pole(s) and fixture(s) to SMEU specifications:

    A. Streetlights shall be installed by developer at all intersections and at the end of cul-de-sacs, and shall have no greater distance than 600 feet between them within or abutting the subdivision. (See City Ordinance: Chapter7/Article4/Division1/Section7.4.1.4u_Streetlights)

    B. Antique lighting shall meet and have prior SMEU approval before installation. Owner/sub-divider shall incur all cost associated with installation and maintenance of all infrastructure not adhering to SMEU specifications.

    C. SMEU shall coordinate all street lightning infrastructures with AHJ Utilities Providers within City of San Marcos Limits.

    D. Electric utilities provider shall maintain all underground secondary. Installation of underground secondary shall be by the developer.

    * AHJ-Authority Having Jurisdiction; a local governing jurisdictional authority with defined geographical boundaries. (Pedernales and Bluebonnet Electric Cooperatives).

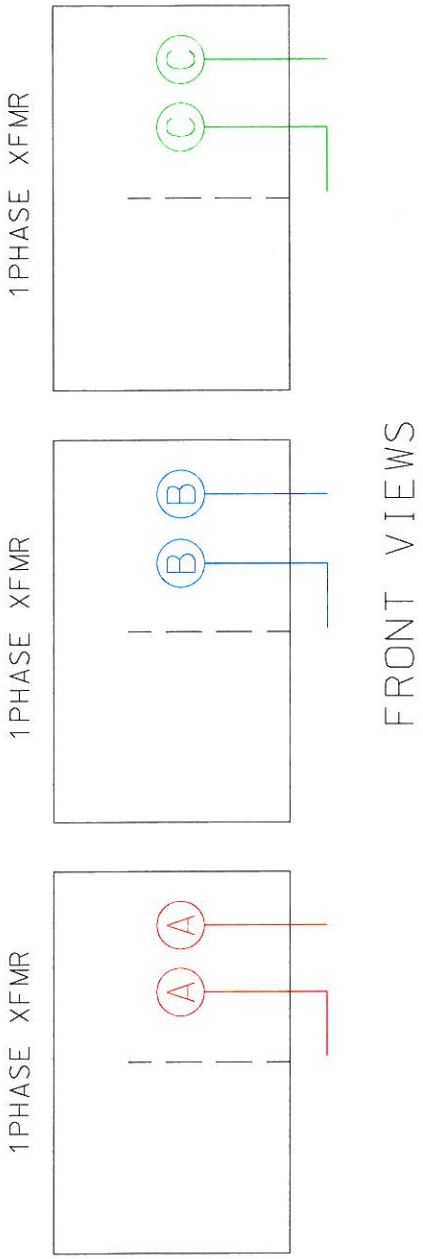

RISER LOCATION & CONDUIT ARRANGEMENT MARKED & ASSIGNED BY SMEU.

SMEU TO ASSIGN ALL URD XFMR PHASING; MARKED & VERIFIED AT BOTH ENDS.

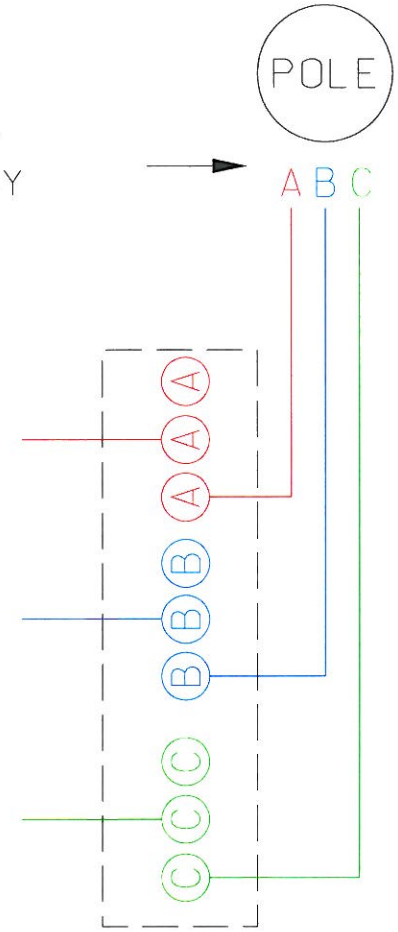

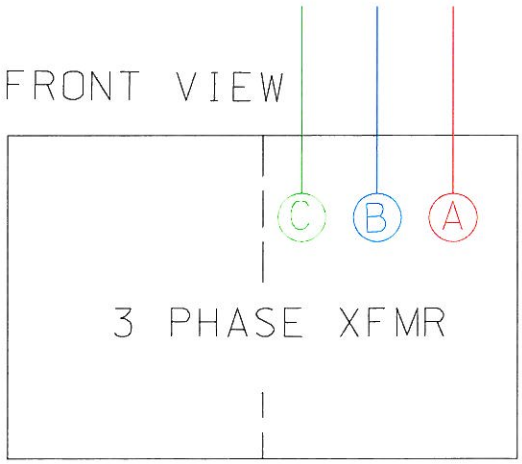

THE CITY OF SAN MARCOS	Electric Utility 1040 St. Hwy. 123 San Marcos, TX 78666 512-393-8300	URD CONDUIT PHASING LAYOUT		
		ISSUED 7/1/09	SCALE NTS	DRAWING NUMBER 6

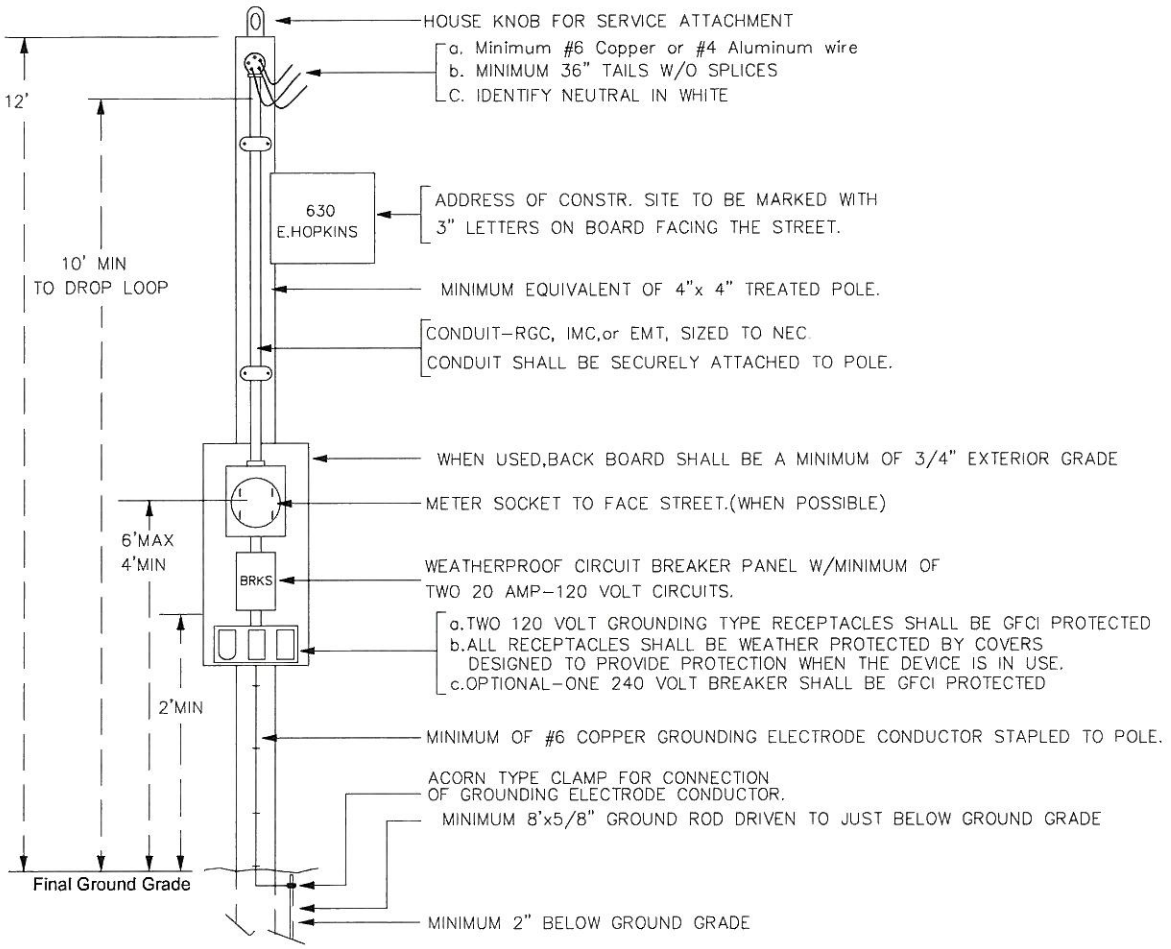

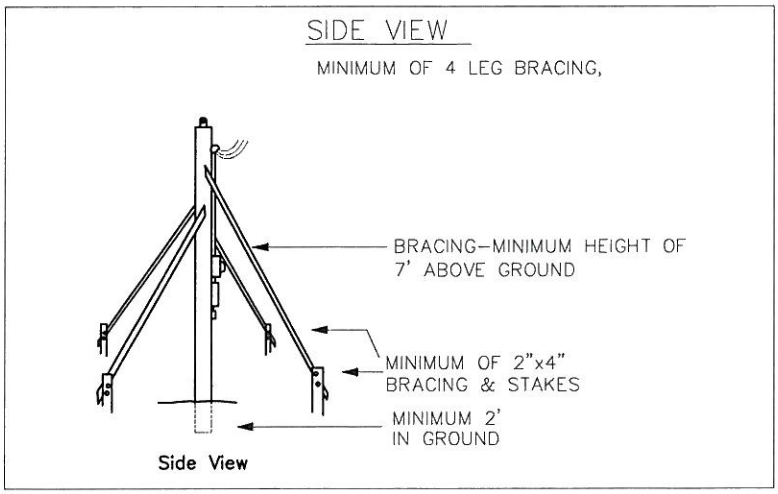

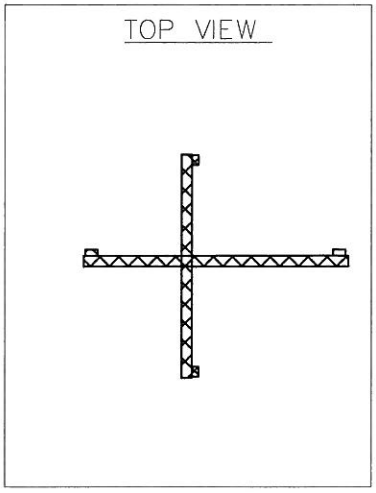

THE CITY OF SAN MARCOS	Electric Utility 1040 St. Hwy. 123 San Marcos, TX 78666 512-393-8300	TEMPORARY CONSTRUCTION LOOP		
		ISSUED 8/1/10	SCALE NTS	DRAWING NUMBER 7

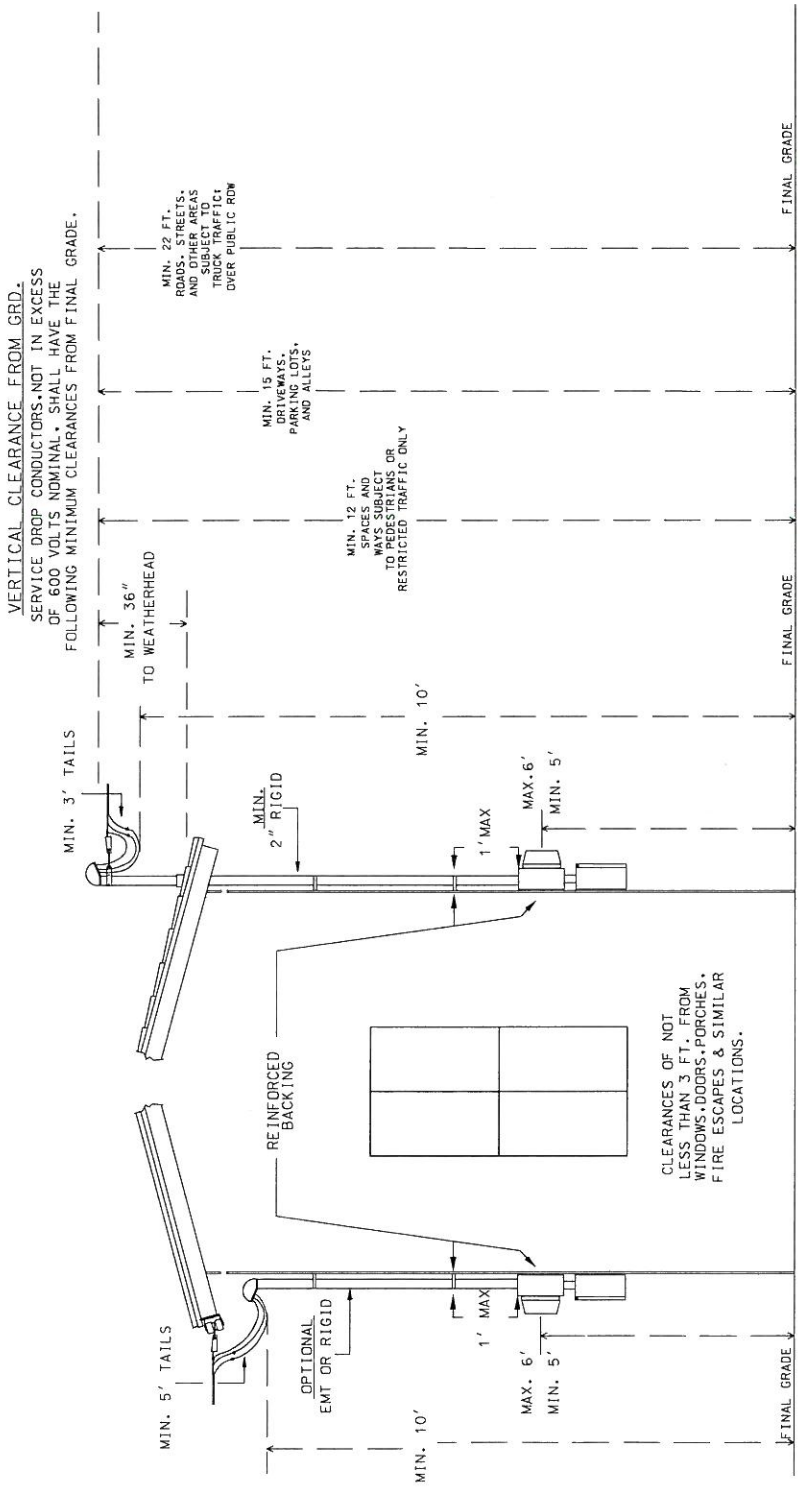

THE CITY OF SAN MARCOS	Electric Utility 1040 St. Hwy. 123 San Marcos, TX 78666 512-393-8300	METER LOOP CLEARANCES		
		ISSUED 7/1/10	SCALE NTS	DRAWING NUMBER 8

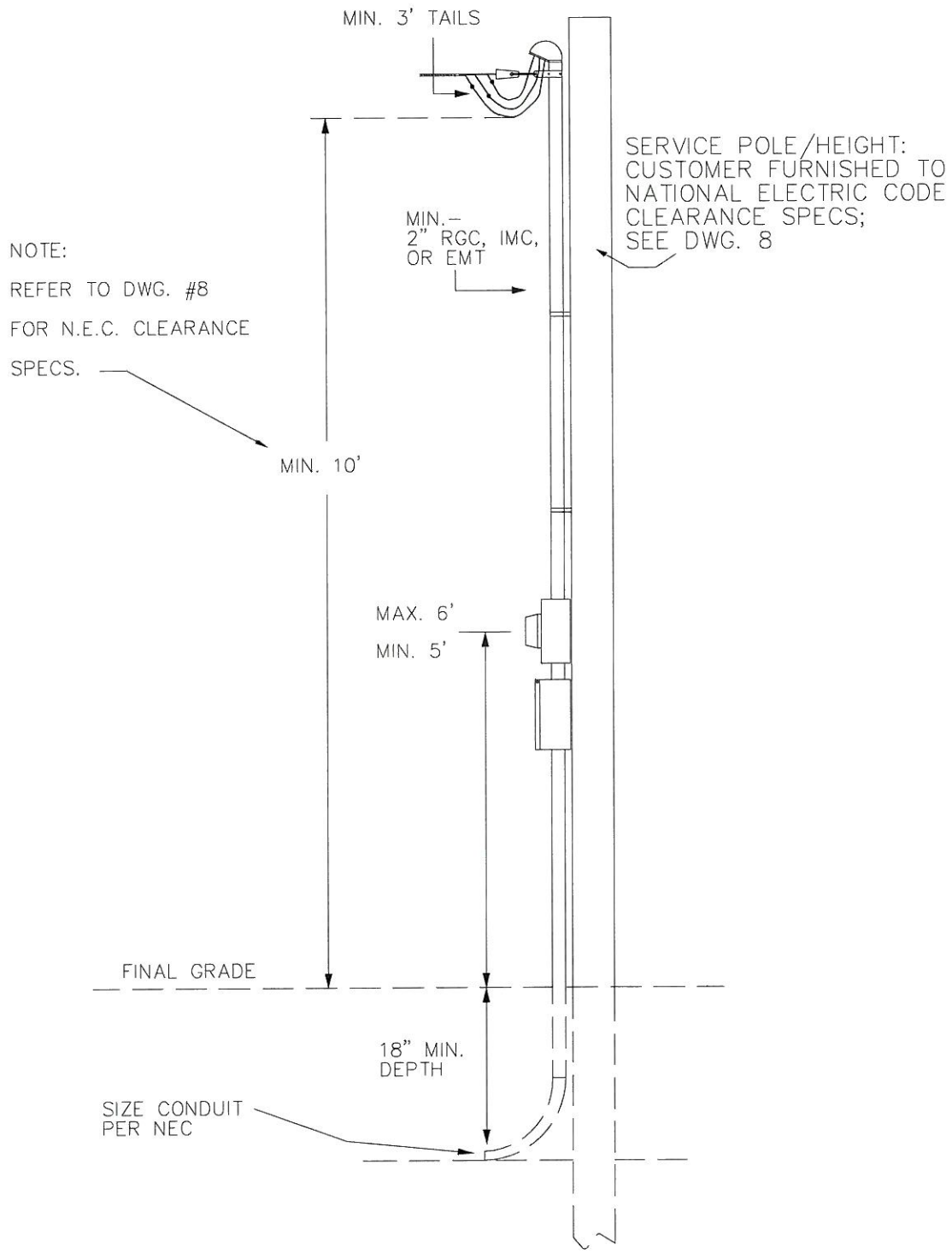

THE CITY OF SAN MARCOS	Electric Utility 1040 St. Hwy. 123 San Marcos, TX 78666 512-393-8300	SERVICE POLE, RISER, & WEATHERHEAD (CUSTOMER FURNISHED)		
		ISSUED 8/1/10	SCALE NTS	DRAWING NUMBER 9

30' SERV. POLE (CUSTOMER FURNISHED)

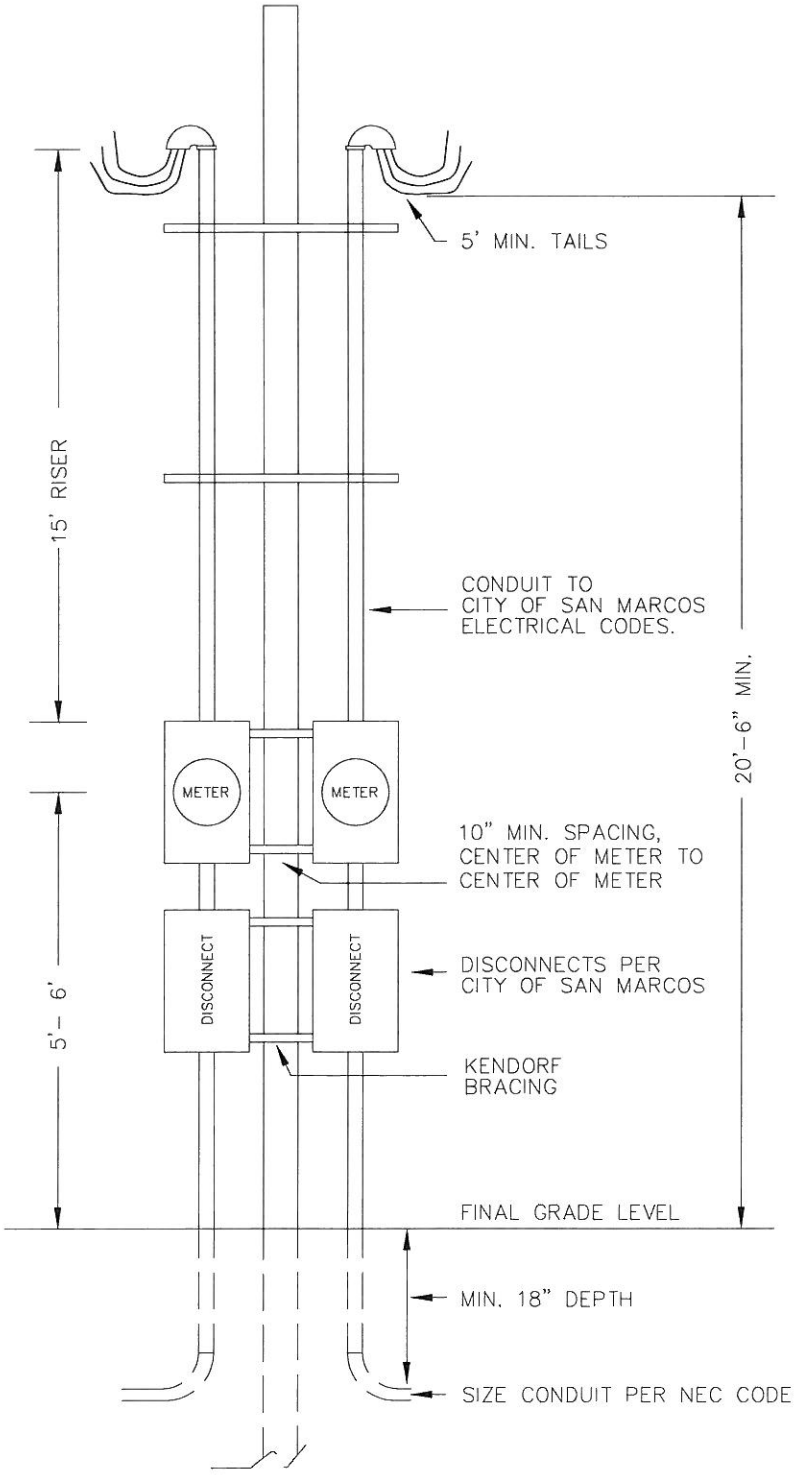

(ALL CUSTOMER FURNISHED,INSTALLED & MAINTAINED)

THE CITY OF SAN MARCOS	Electric Utility 1040 St. Hwy. 123 San Marcos, TX 78666 512-393-8300	SERVICE POLE, RISERS, WEATHERHEADS, & METERS		
		ISSUED 8/1/09	SCALE NTS	DRAWING NUMBER 10

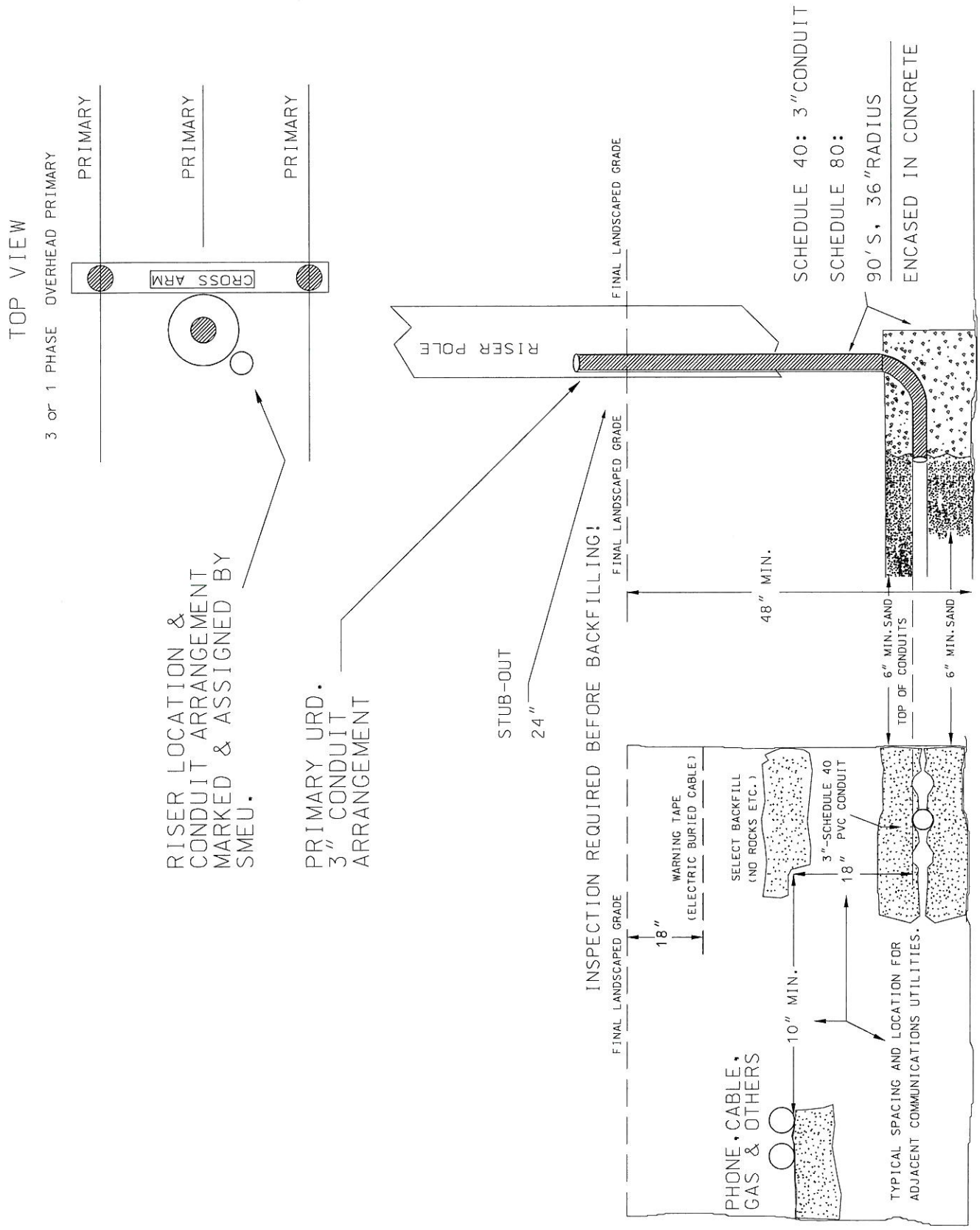

THE CITY OF SAN MARCOS	Electric Utility 1040 St. Hwy. 123 San Marcos, TX 78666 512-393-8300	1P PRI. URD RISER W/3" CONDUIT; 2 TRENCHES		
		ISSUED 7/1/10	SCALE NTS	DRAWING NUMBER 11

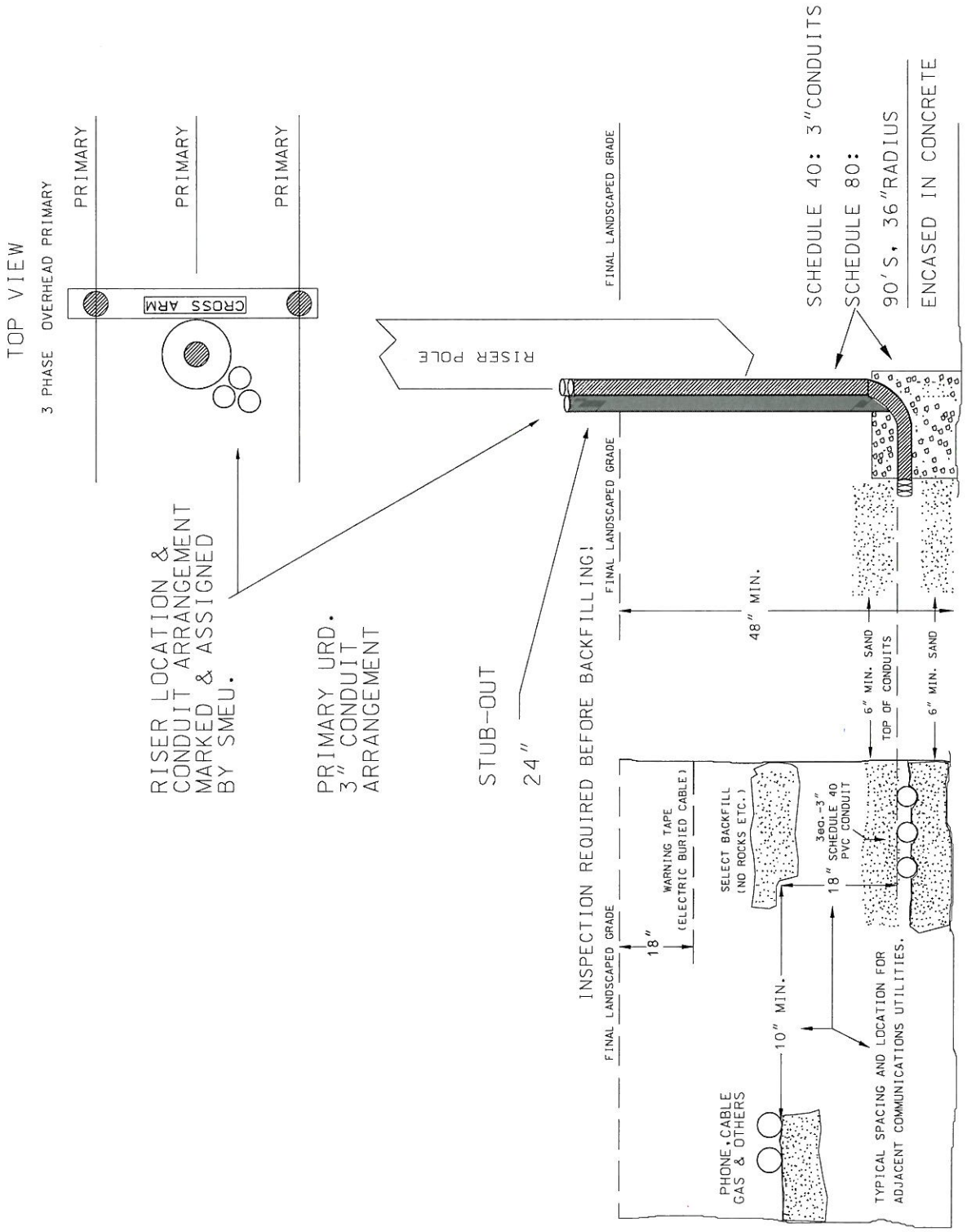

THE CITY OF SAN MARCOS	Electric Utility 1040 St. Hwy. 123 San Marcos, TX 78666 512-393-8300	3P PRI. URD RISER W/3" CONDUIT; 2 TRENCHES		
		ISSUED 7/1/10	SCALE NTS	DRAWING NUMBER 12

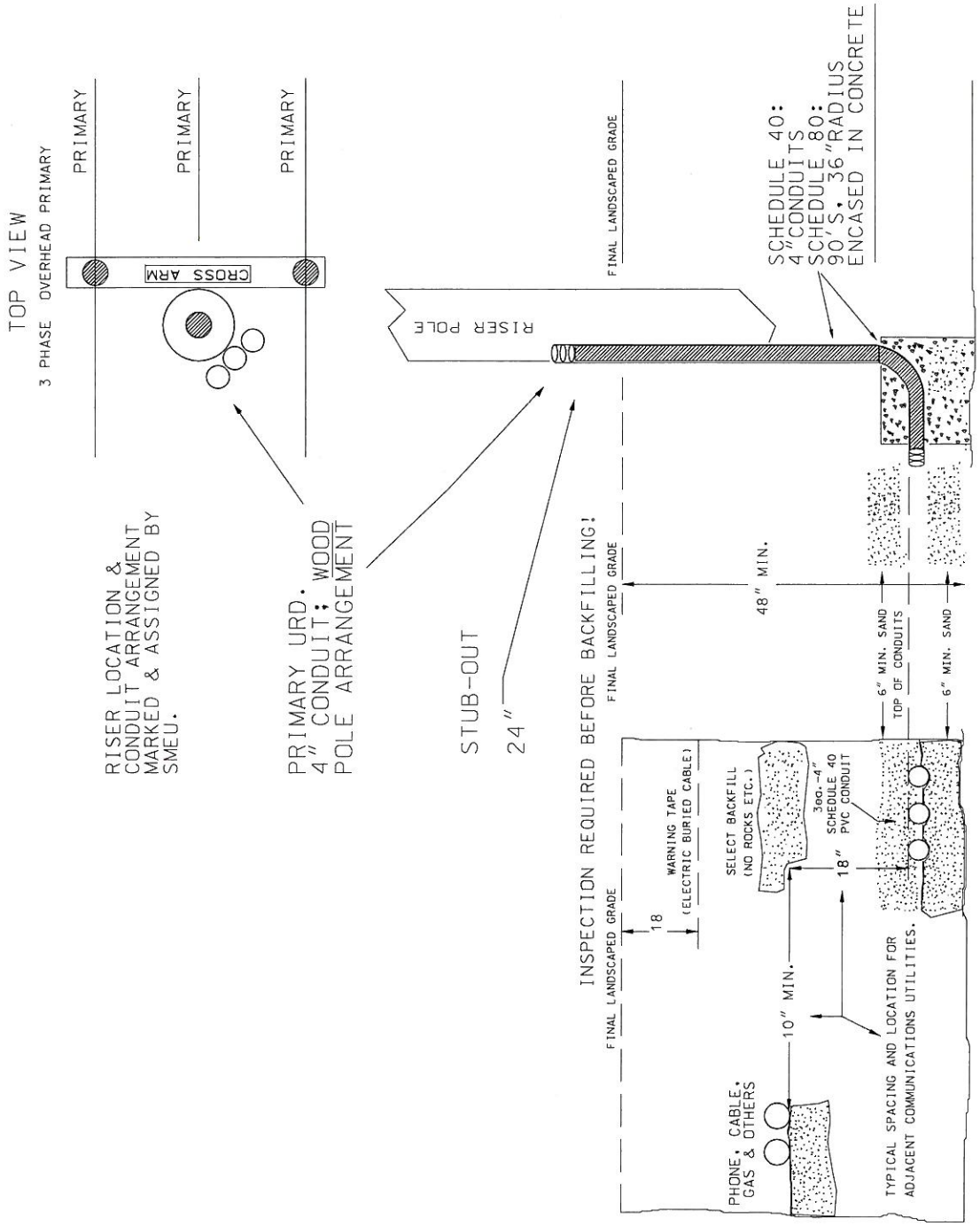

THE CITY OF SAN MARCOS

Electric Utility
1040 St. Hwy. 123
San Marcos, TX 78666
512-393-8300

3P PRI. URD RISER W/4" CONDUITS ON WOOD POLE

ISSUED	SCALE	DRAWING NUMBER
7/1/09	NTS	13

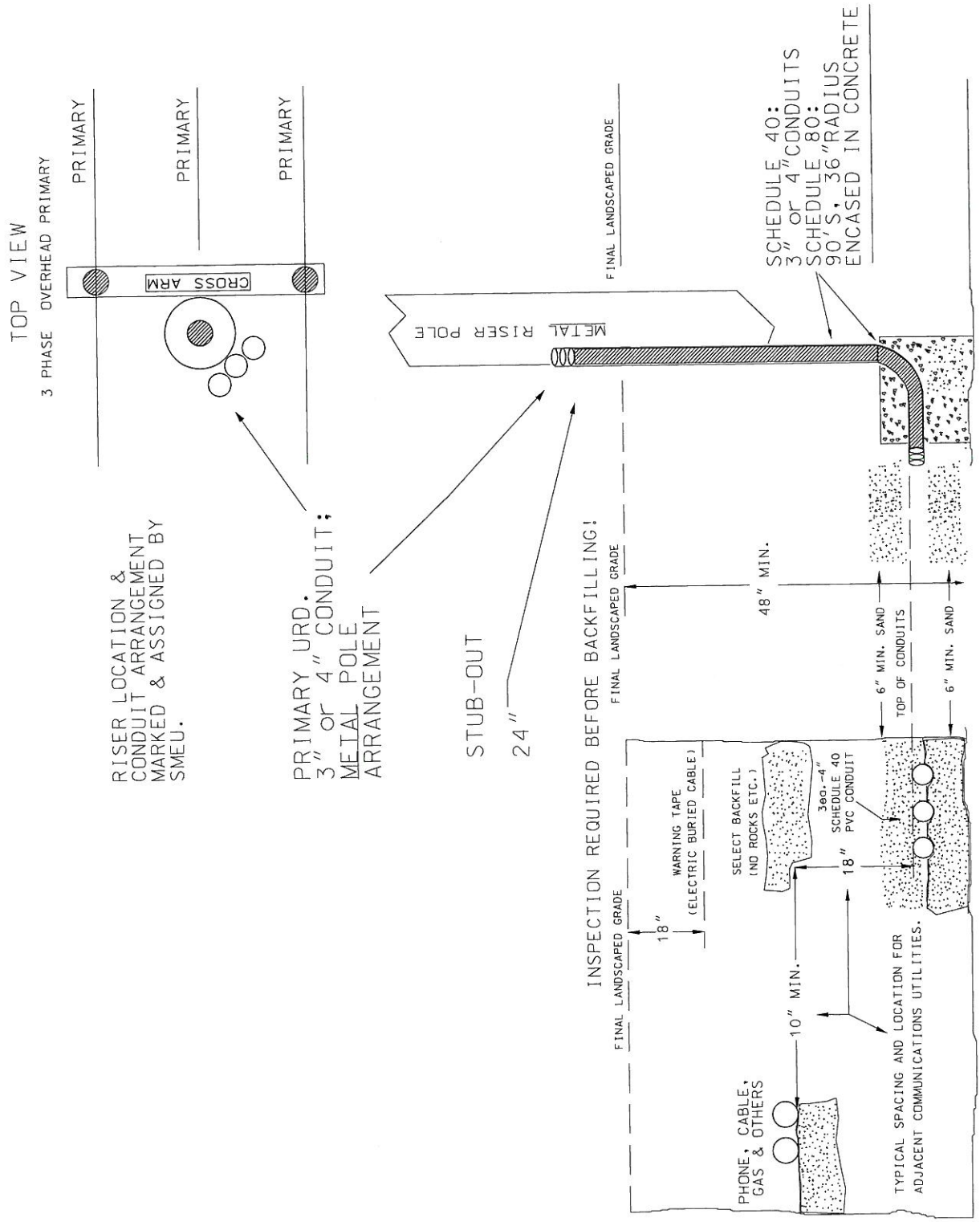

THE CITY OF SAN MARCOS	Electric Utility 1040 St. Hwy. 123 San Marcos, TX 78666 512-393-8300	3P PRI. URD RISER W/3 OR 4" CONDUITS ON METAL POLE		
		ISSUED 7/1/10	SCALE NTS	DRAWING NUMBER 14

INSPECTION REQUIRED BEFORE BACKFILLING

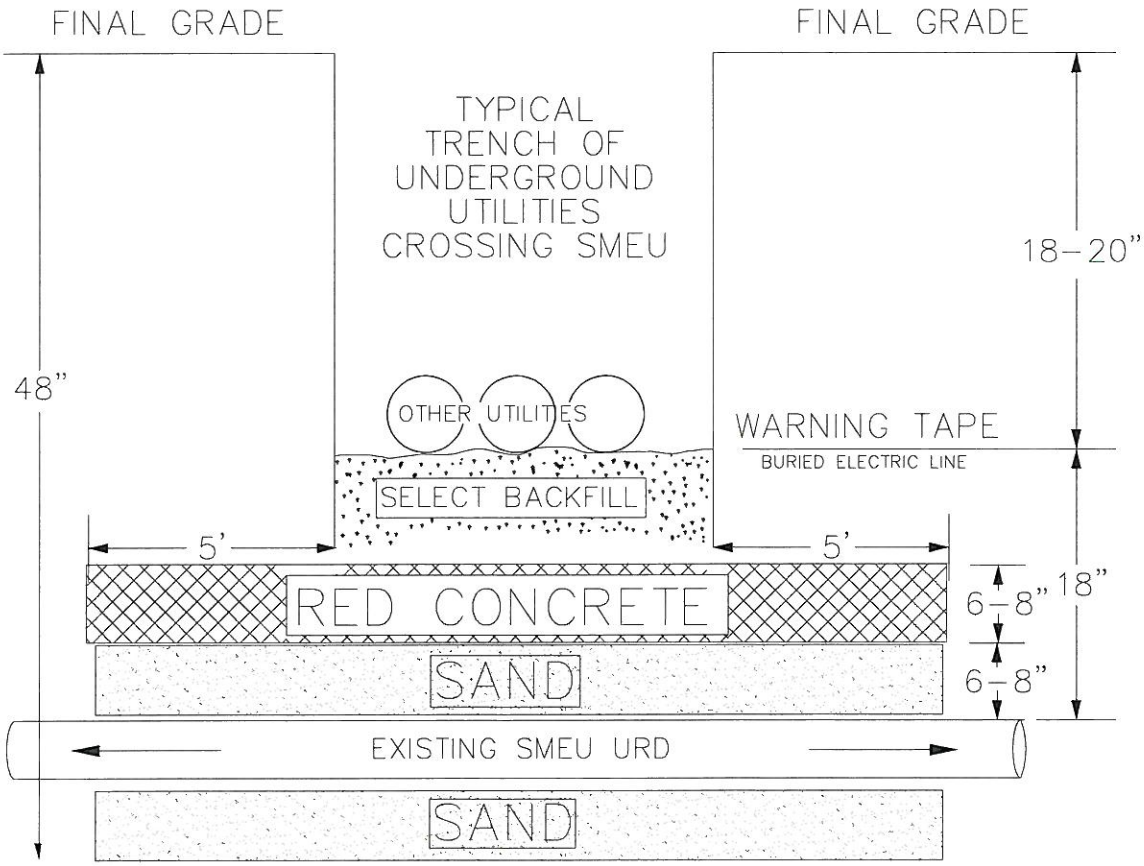

THE CITY OF SAN MARCOS	Electric Utility 1040 St. Hwy. 123 San Marcos, TX 78666 512-393-8300	UTILITIES CROSSING SMEU URD		
		ISSUED 8/1/10	SCALE NTS	DRAWING NUMBER 15

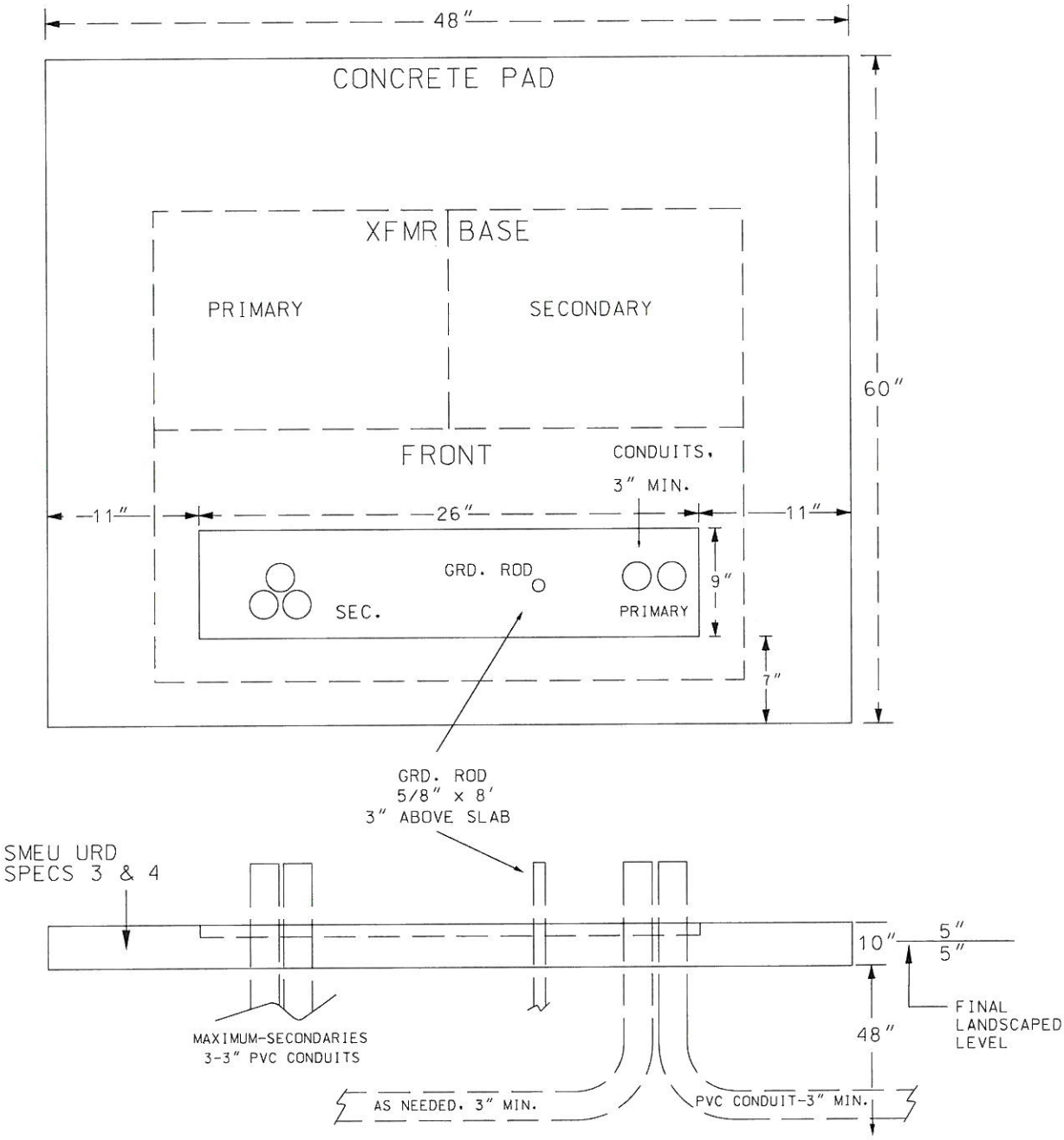

SCHEDULE 40 - 3" PVC CONDUIT

SCHEDULE 80 - PVC 90's, 36" RADIUS, CONCRETE ENCASED

THE CITY OF SAN MARCOS	Electric Utility 1040 St. Hwy. 123 San Marcos, TX 78666 512-393-8300	PAD MOUNT, 1 PHASE, 25 TO 167 KVA XFMRS		
		ISSUED 7/1/10	SCALE NTS	DRAWING NUMBER 16

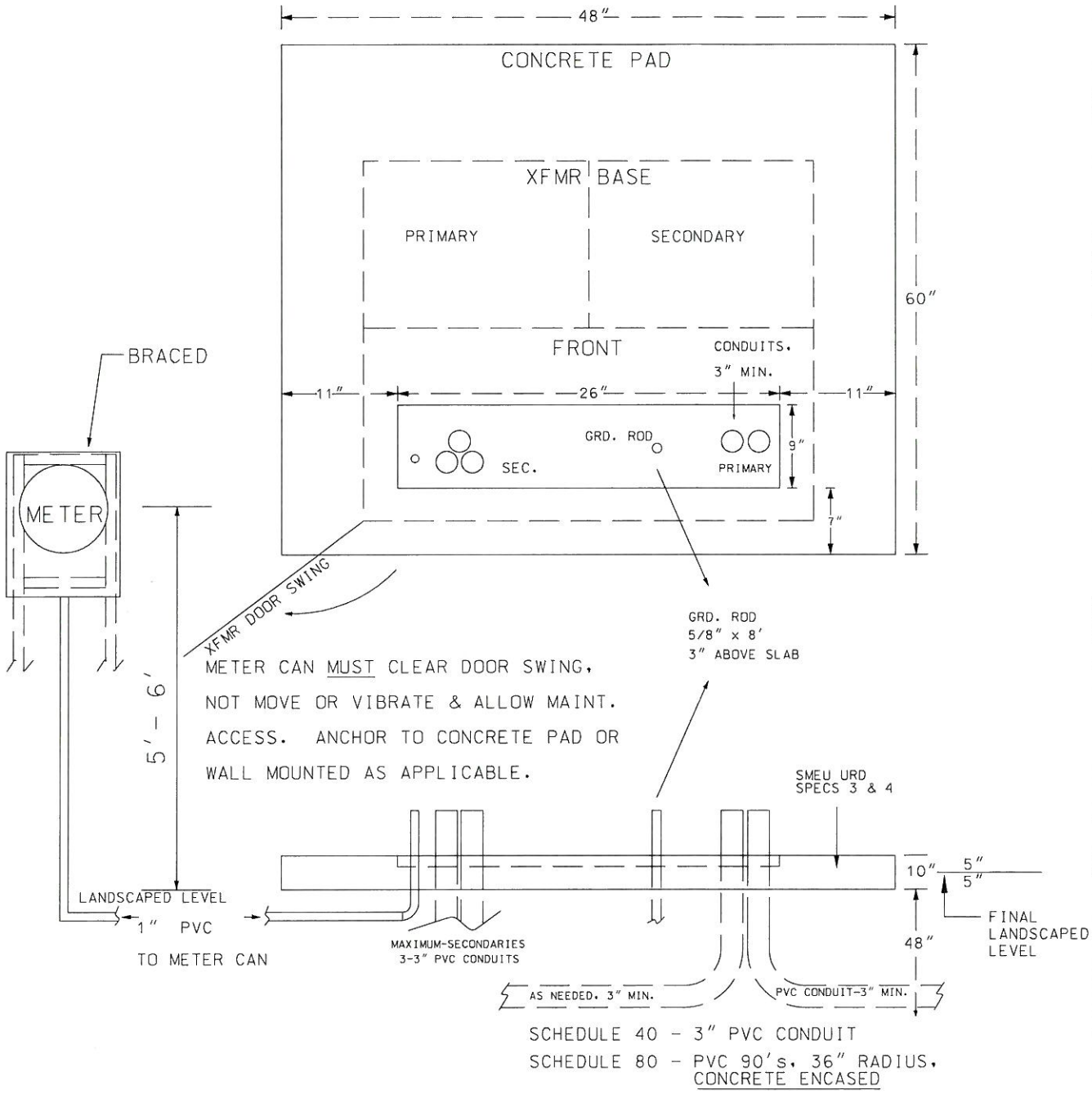

THE CITY OF SAN MARCOS	Electric Utility 1040 St. Hwy. 123 San Marcos, TX 78666 512-393-8300	PAD MOUNT, 1 PHASE, 25 TO 167 KVA XFMRS CT METERED		
		ISSUED 7/1/10	SCALE NTS	DRAWING NUMBER 17

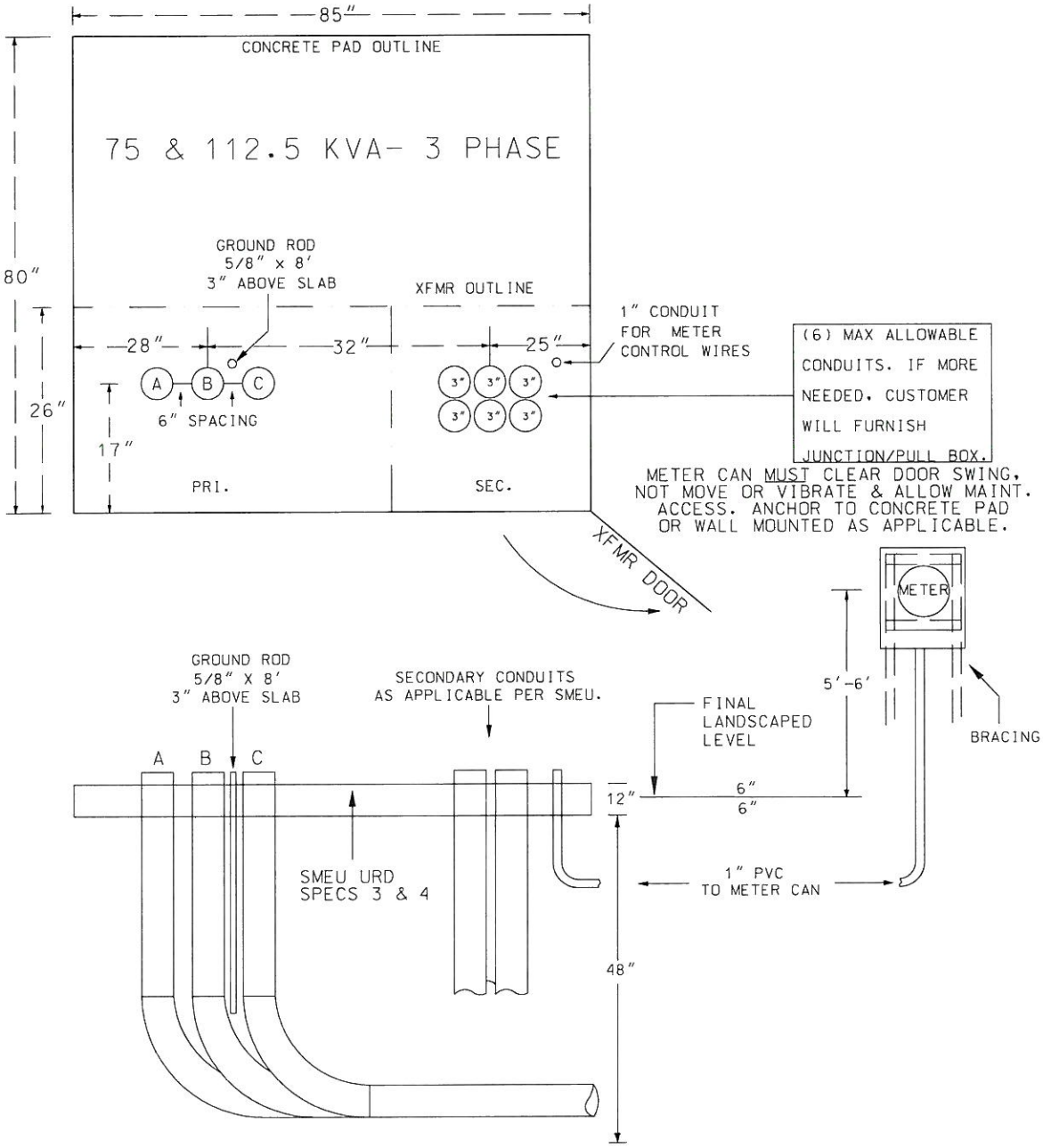

SCHEDULE 40 - 3" PVC CONDUIT

SCHEDULE 80 - PVC 90's, 36" RADIUS, CONCRETE ENCASED

THE CITY OF SAN MARCOS	Electric Utility 1040 St. Hwy. 123 San Marcos, TX 78666 512-393-8300	PAD MOUNT, 3 PHASE, 75 TO 112.5 KVA XFMRS		
		ISSUED 7/1/10	SCALE NTS	DRAWING NUMBER 18

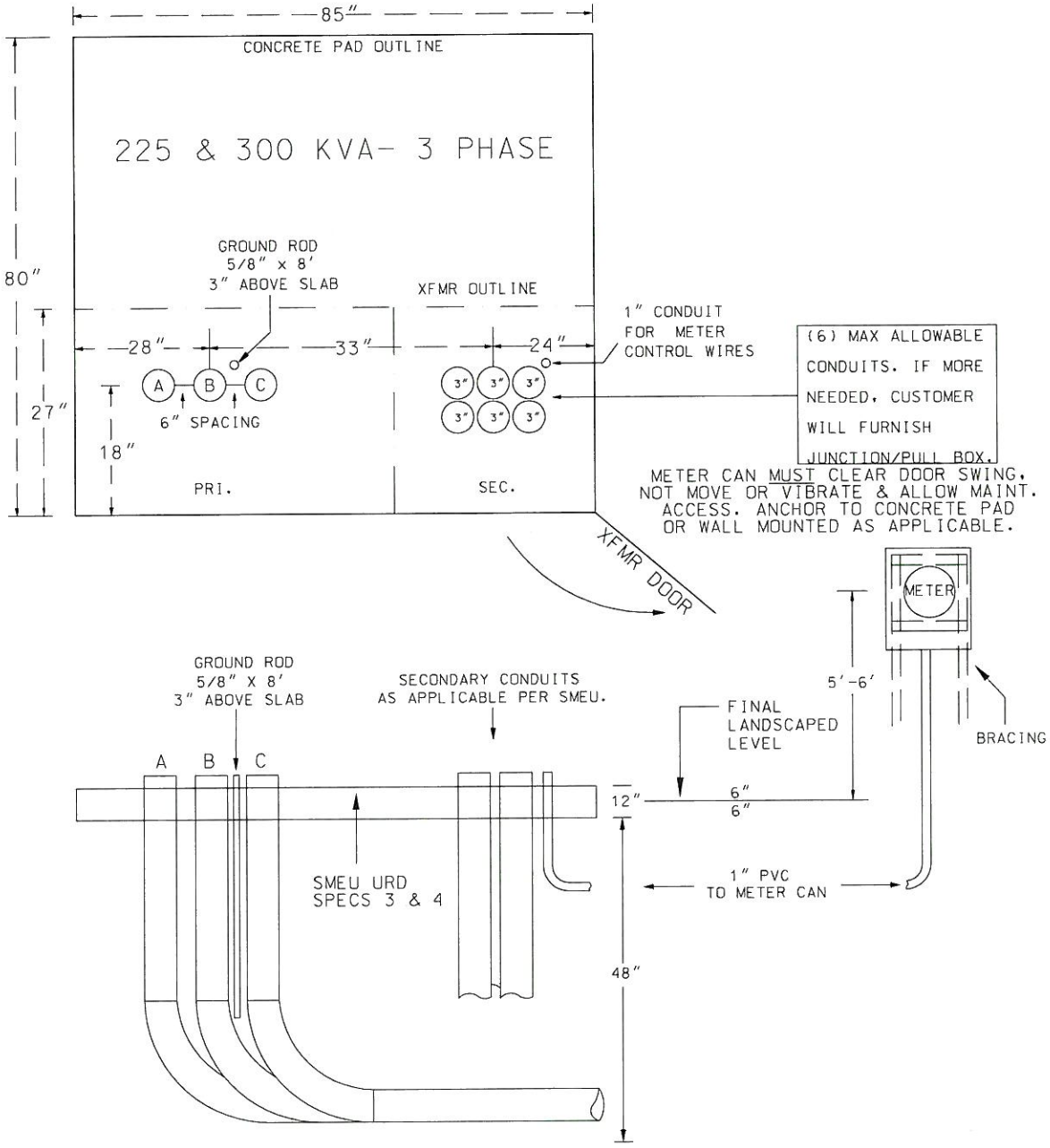

SCHEDULE 40 - 3" PVC CONDUIT

SCHEDULE 80 - PVC 90's, 36" RADIUS, CONCRETE ENCASED

THE CITY OF SAN MARCOS	Electric Utility 1040 St. Hwy. 123 San Marcos, TX 78666 512-393-8300	PAD MOUNT, 3 PHASE, 225 TO 300 KVA XFMRS		
		ISSUED 7/1/10	SCALE NTS	DRAWING NUMBER 19

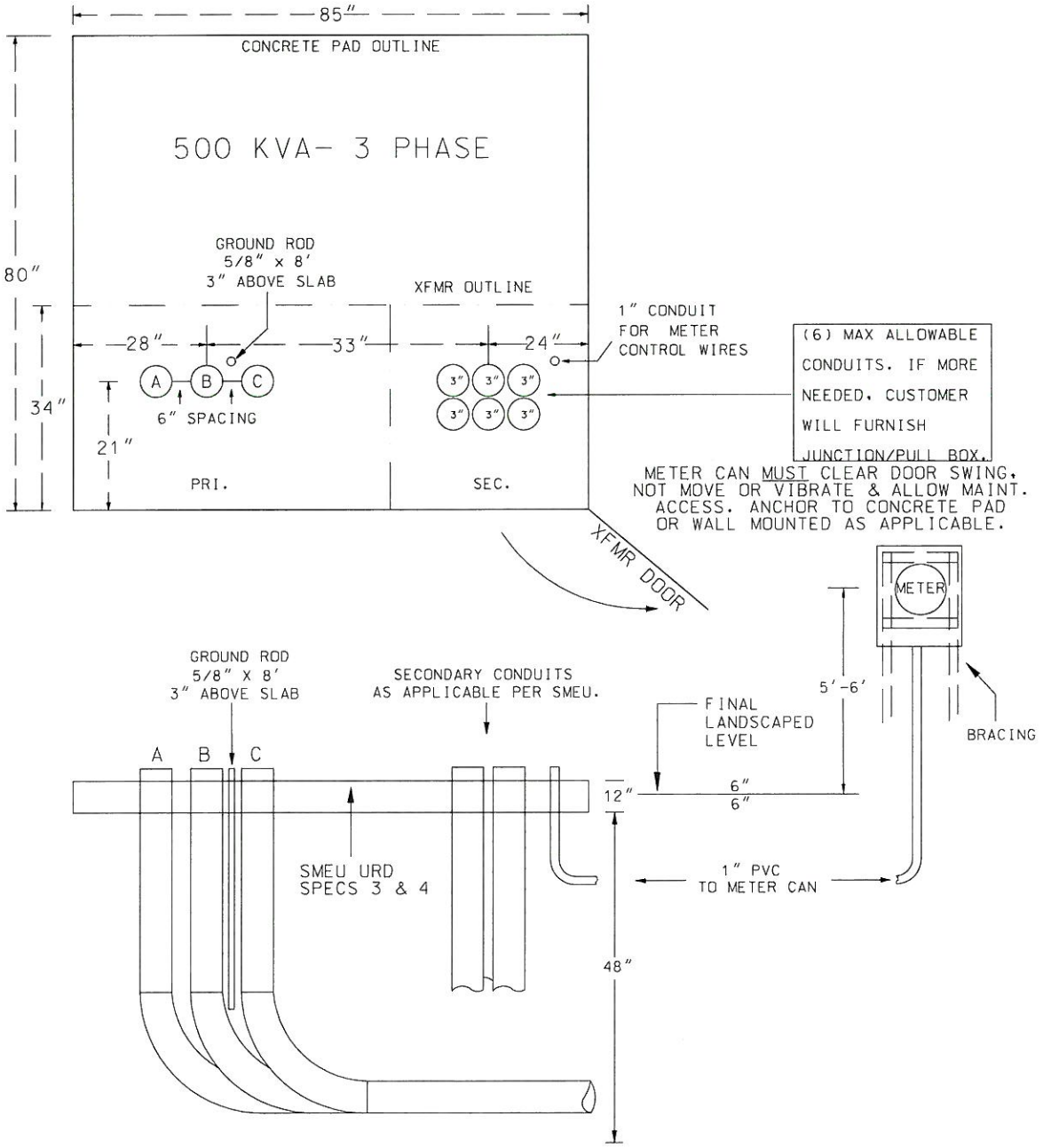

SCHEDULE 40 - 3" PVC CONDUIT

SCHEDULE 80 - PVC 90's, 36" RADIUS, CONCRETE ENCASED

THE CITY OF SAN MARCOS	Electric Utility 1040 St. Hwy. 123 San Marcos, TX 78666 512-393-8300	PAD MOUNT, 3 PHASE, 500 KVA XFMR		
		ISSUED 7/1/10	SCALE NTS	DRAWING NUMBER 20

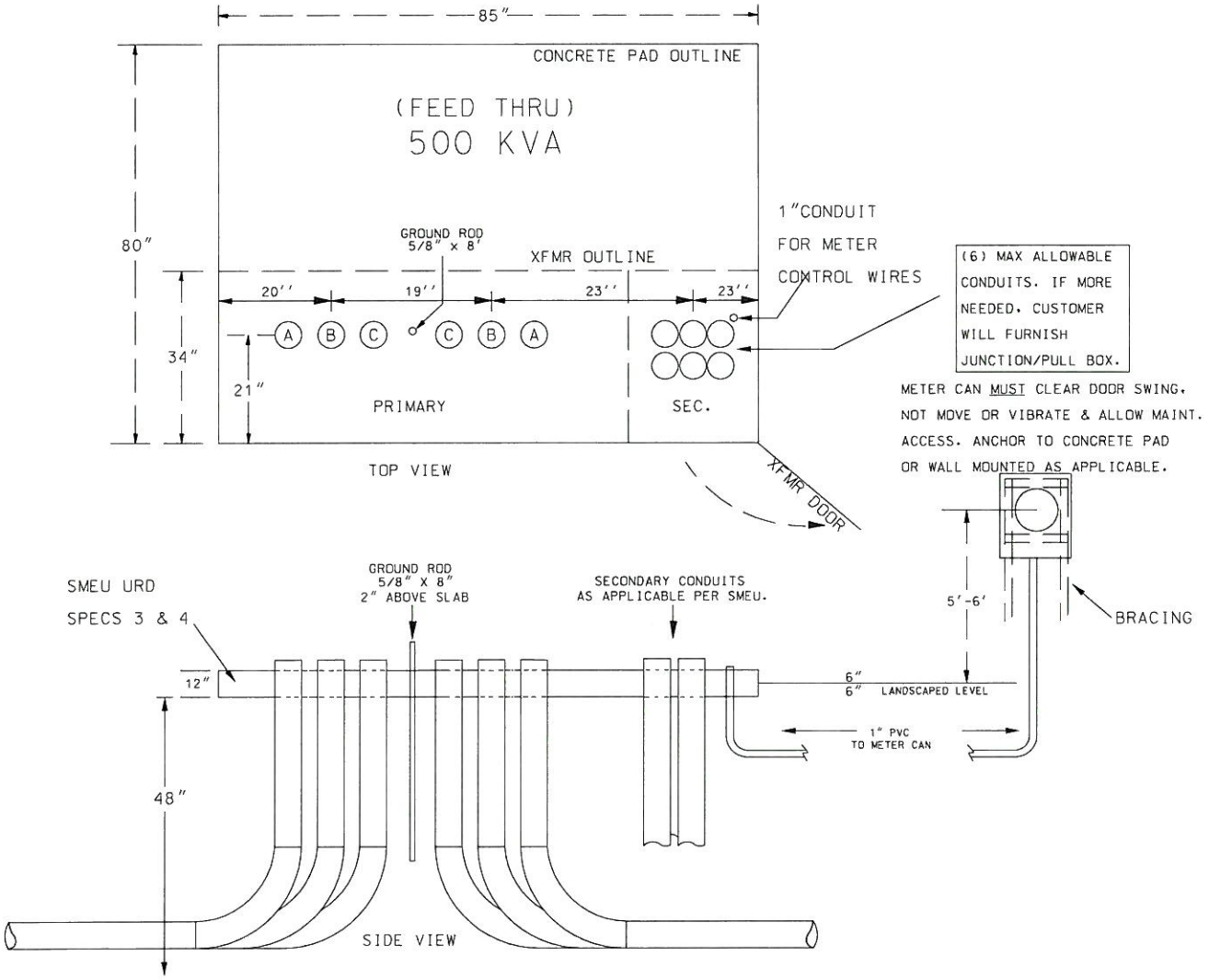

SCHEDULE 40 - 3" PVC CONDUIT

SCHEDULE 80 - PVC 90'S. 36"RADIUS

CONCRETE ENCASED

NOTE: ALL FEED THRU TRANSFORMER PADS TO BE DESIGNED BY SMEU PERSONNEL AT TIME OF REQUEST.

THE CITY OF SAN MARCOS	Electric Utility 1040 St. Hwy. 123 San Marcos, TX 78666 512-393-8300	3P 500KVA-FEED THRU SYSTEM		
		ISSUED 7/1/10	SCALE NTS	DRAWING NUMBER 21

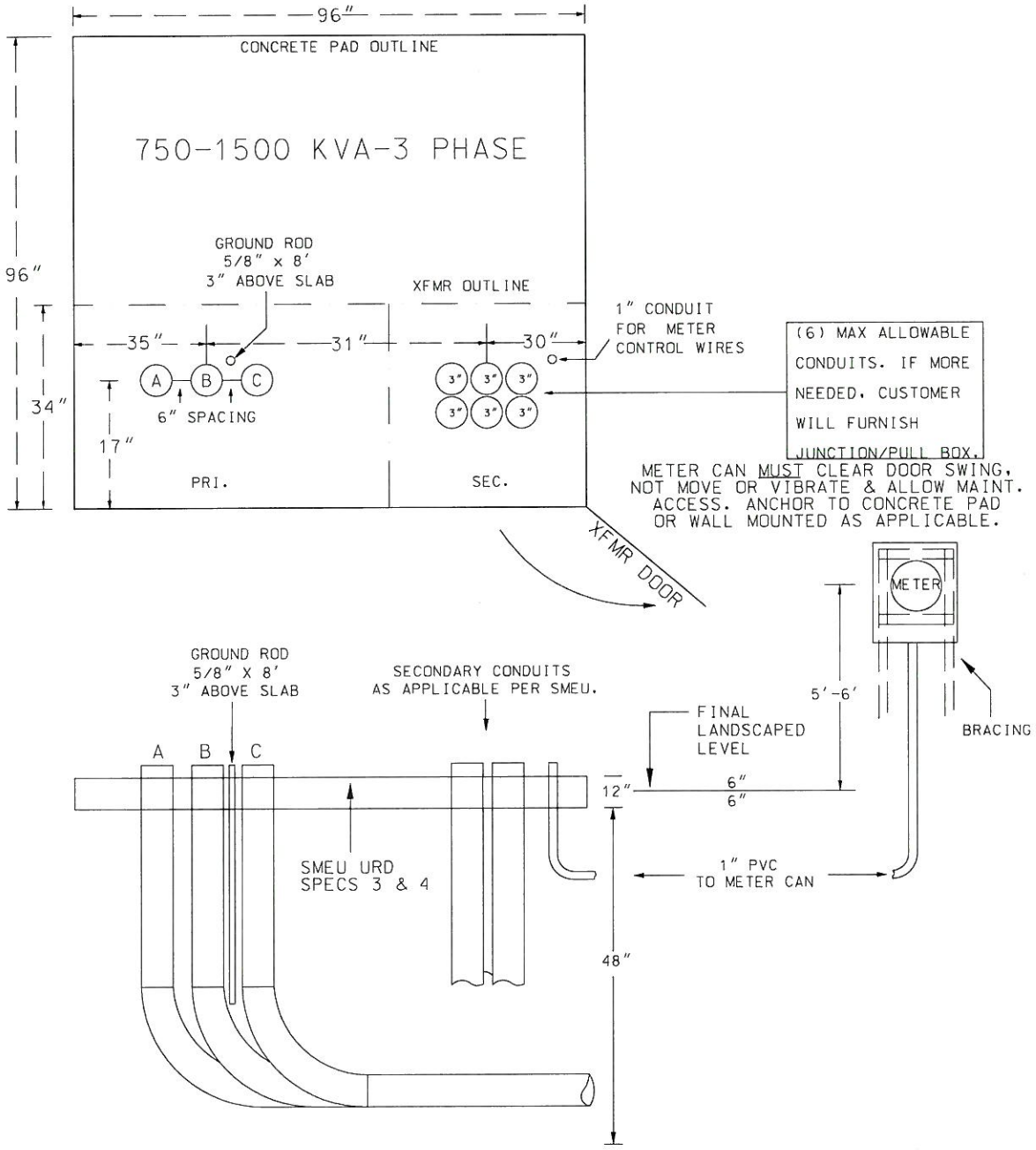

SCHEDULE 40 - 3″ PVC CONDUIT

SCHEDULE 80 - PVC 90′s, 36″ RADIUS, CONCRETE ENCASED

THE CITY OF SAN MARCOS	Electric Utility 1040 St. Hwy. 123 San Marcos, TX 78666 512-393-8300	PAD MOUNT, 3 PHASE, 750-1500 KVA XFMRS		
		ISSUED 7/1/10	SCALE NTS	DRAWING NUMBER 22

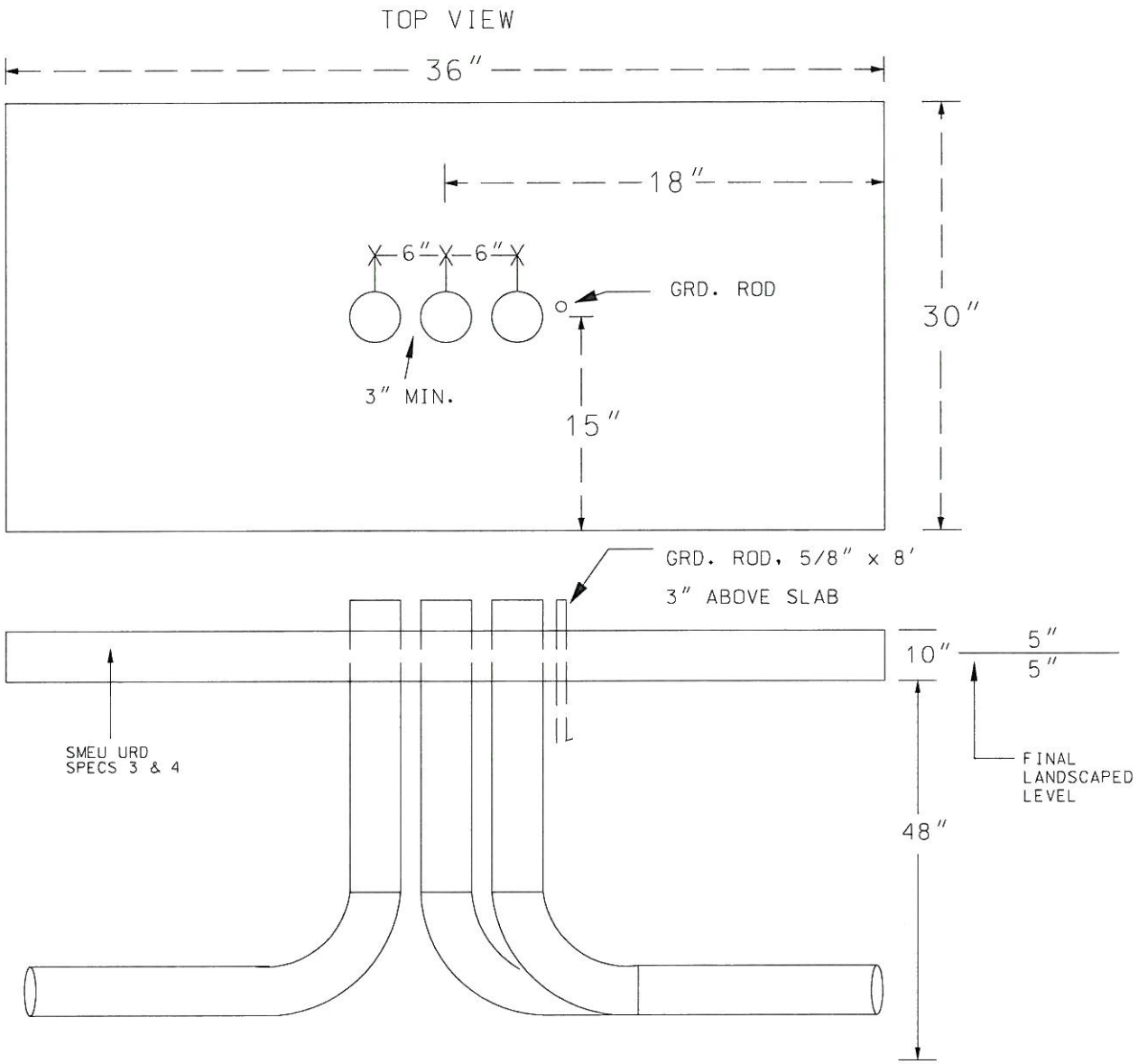

SCHEDULE 40 - 3" PVC CONDUIT

SCHEDULE 80 - PVC 90's, 36" RADIUS, CONCRETE ENCASED

THE CITY OF SAN MARCOS	Electric Utility 1040 St. Hwy. 123 San Marcos, TX 78666 512-393-8300	1 PHASE ENCLOSURE PAD		
		ISSUED 7/1/10	SCALE NTS	DRAWING NUMBER 23

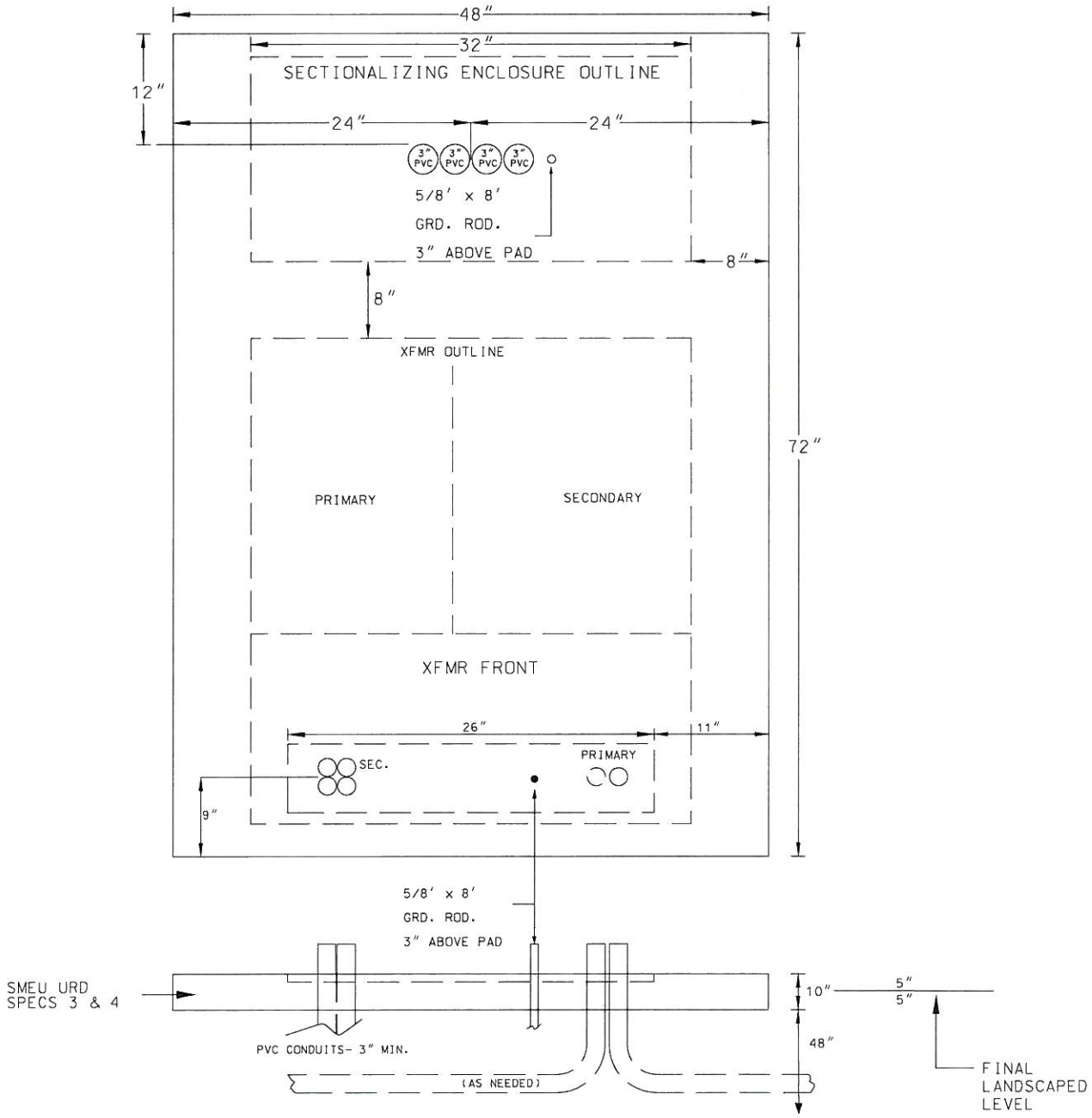

SCHEDULE 40 - 3" PVC CONDUIT

SCHEDULE 80 - PVC 90's, 36" RADIUS, CONCRETE ENCASED

THE CITY OF SAN MARCOS	Electric Utility 1040 St. Hwy. 123 San Marcos, TX 78666 512-393-8300	1 PHASE ENCLOSURE PAD & 25-167 KVA XFMR COMBO. PAD		
		ISSUED 7/1/10	SCALE NTS	DRAWING NUMBER 24

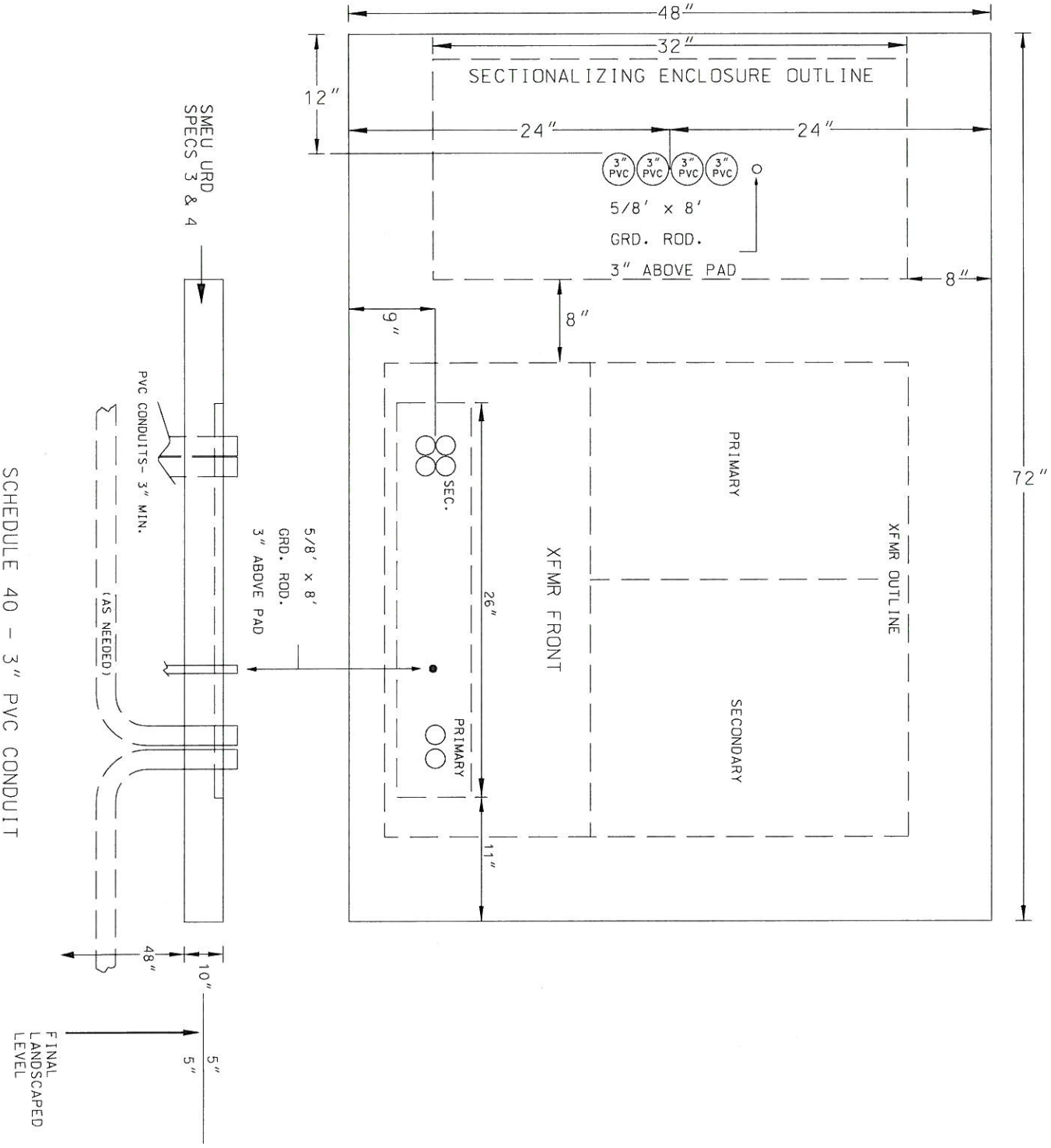

THE CITY OF SAN MARCOS

Electric Utility
1040 St. Hwy. 123
San Marcos, TX 78666
512-393-8300

1 PHASE ENCLOSURE PAD &
SIDEWAY 25-167 KVA XFMR PAD

ISSUED	SCALE	DRAWING NUMBER
7/1/10	NTS	25

TOP VIEW

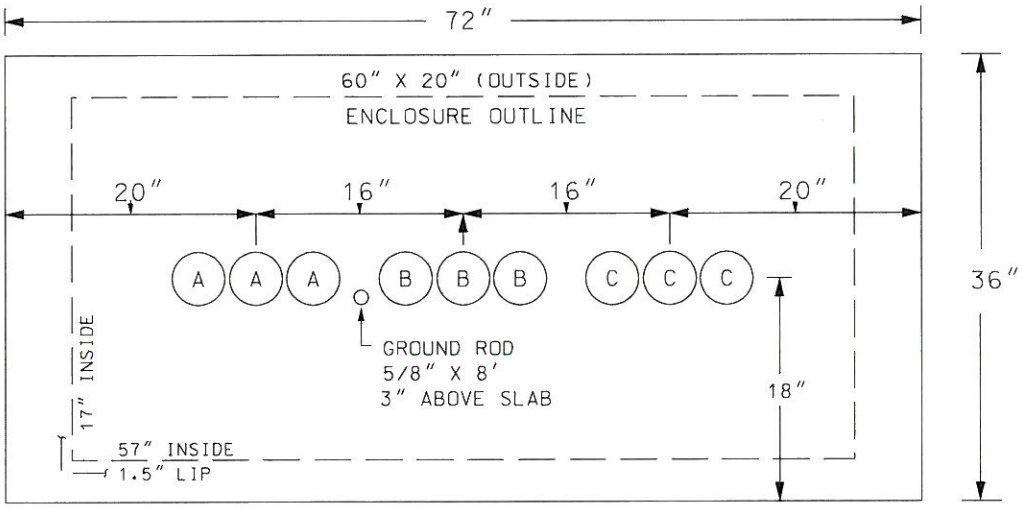

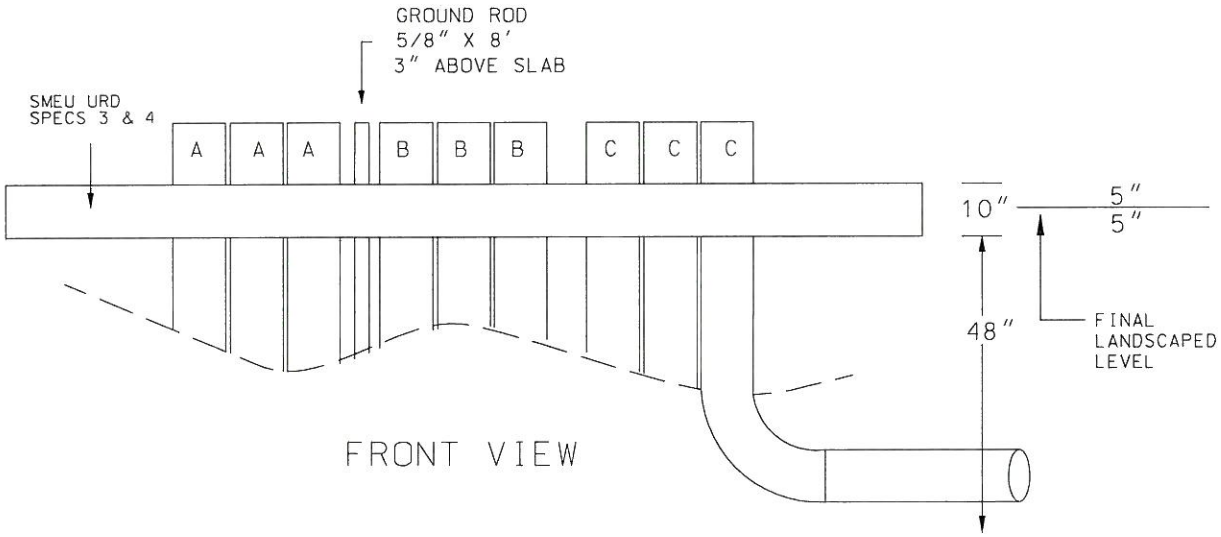

FRONT VIEW

SCHEDULE 40 - 3" PVC CONDUIT

SCHEDULE 80 - PVC 90's, 36" RADIUS, CONCRETE ENCASED

THE CITY OF SAN MARCOS	Electric Utility 1040 St. Hwy. 123 San Marcos, TX 78666 512-393-8300	3 PHASE-72" ENCLOSURE-(3) 3" PVC		
		ISSUED 7/1/10	SCALE NTS	DRAWING NUMBER 26

TOP VIEW

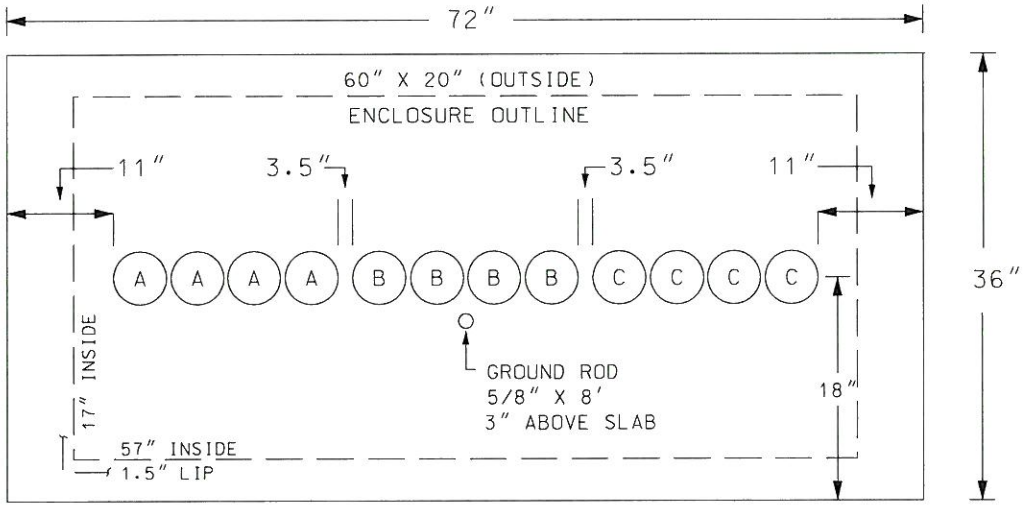

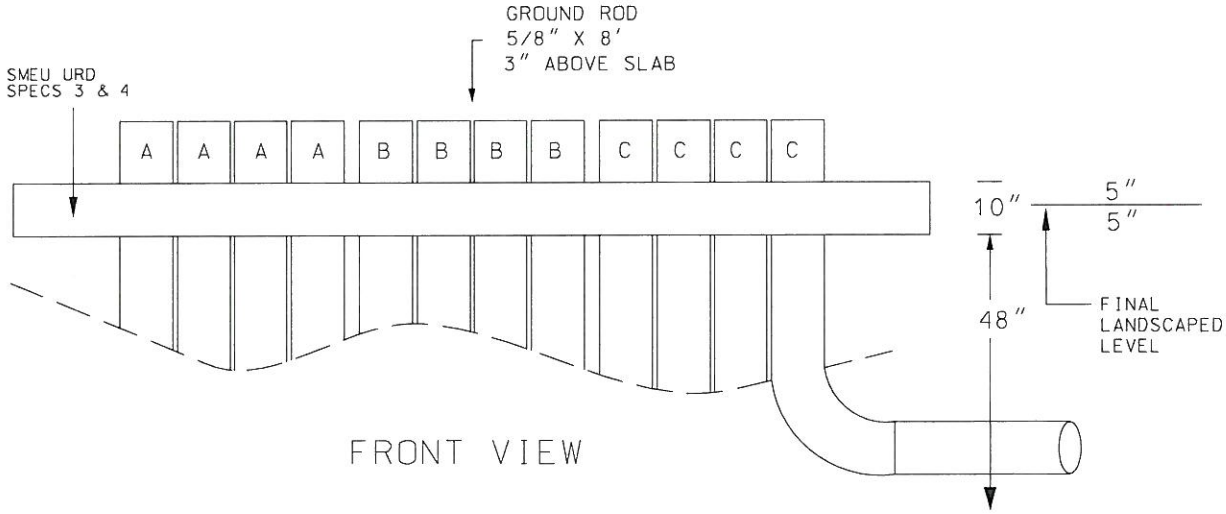

FRONT VIEW

SCHEDULE 40 - 3" PVC CONDUIT

SCHEDULE 80 - PVC 90's, 36" RADIUS, CONCRETE ENCASED

THE CITY OF SAN MARCOS	Electric Utility 1040 St. Hwy. 123 San Marcos, TX 78666 512-393-8300	3 PHASE-72" ENCLOSURE-(4) 3" PVC		
		ISSUED 7/1/10	SCALE NTS	DRAWING NUMBER 27

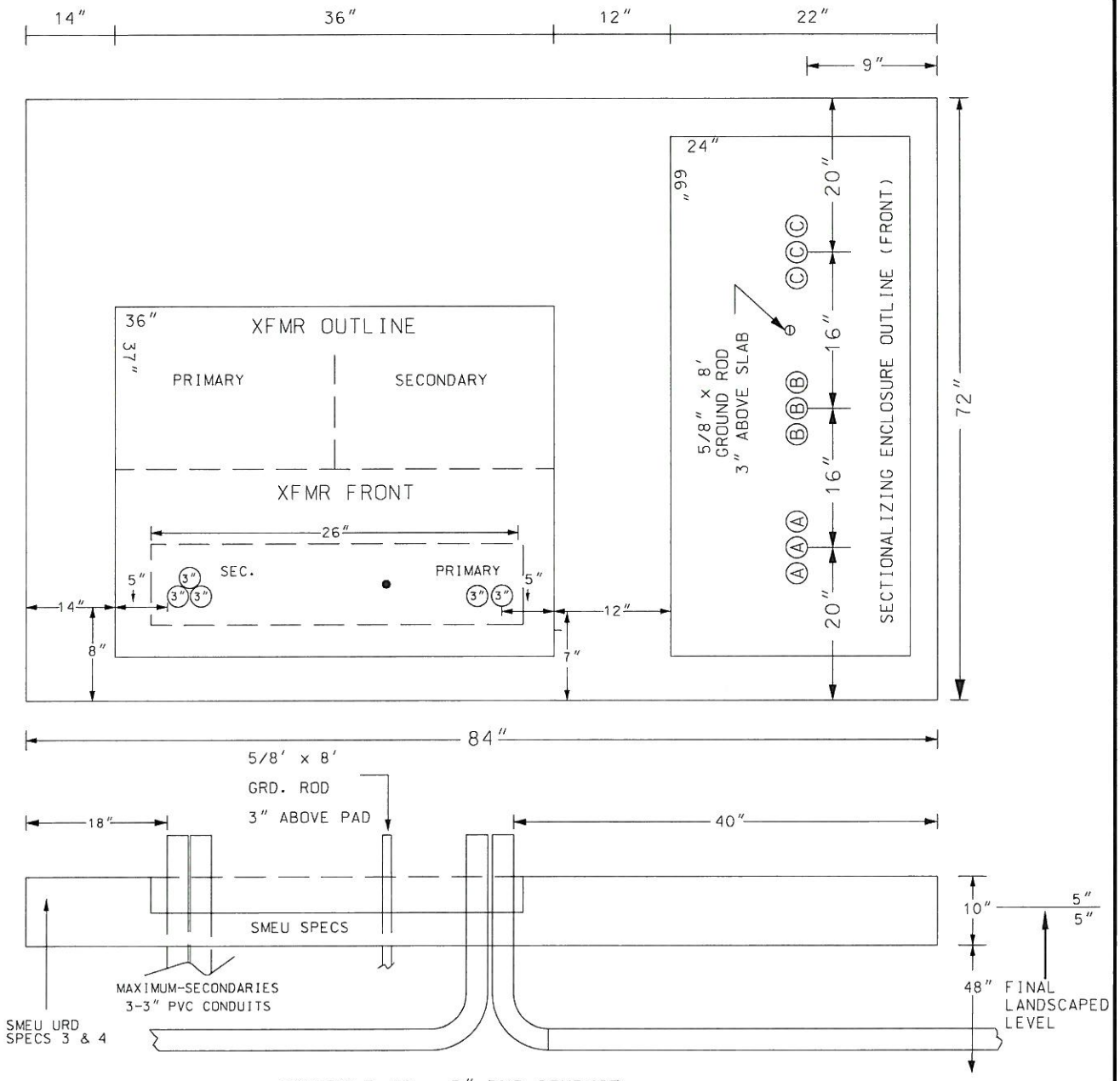

SCHEDULE 40 - 3" PVC CONDUIT

SCHEDULE 80 - PVC 90's, 36" RADIUS, CONCRETE ENCASED

THE CITY OF SAN MARCOS	Electric Utility 1040 St. Hwy. 123 San Marcos, TX 78666 512-393-8300	3 PHASE ENCLOSURE & 1P XFMR, 72" COMBINATION PAD		
		ISSUED 7/1/10	SCALE NTS	DRAWING NUMBER 28

This specification shall be used only in conjunction with the SMEU Underground Installation Specifications and may not reflect all requirements of a specific installation.

Top View

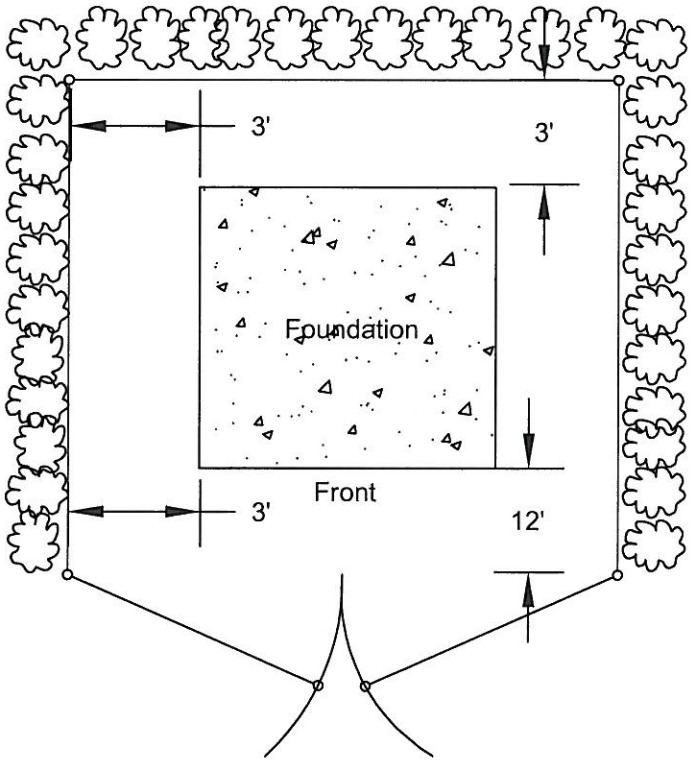

Transformer location must be accessible at all times. Clearance around SMEU equipment to any barrier shall be 3' minimum on sides and back; 12' minimum in front.

Any installation that would enclose any metering/disconnect assemble within the barrier shall be approved by SMEU.

Barrier can be vegetation, chain link, wood, concrete block, or appropriate material. Fencing/gate material shall be designed to allow for adequate air circulation around equipment and is subject to SMEU approval.

Side View

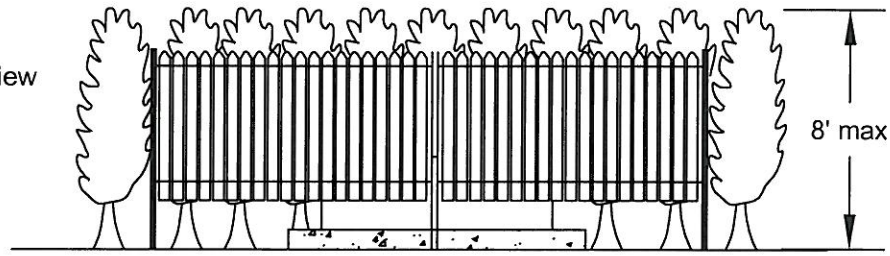

Electrical Engineering
1040 St. Hwy. 123
San Marcos, TX 78666
512-393-8300

PADMOUNT ENCLOSURES CLEARANCES

ISSUED	SCALE	DRAWING NUMBER
7/1/10	NTS	29

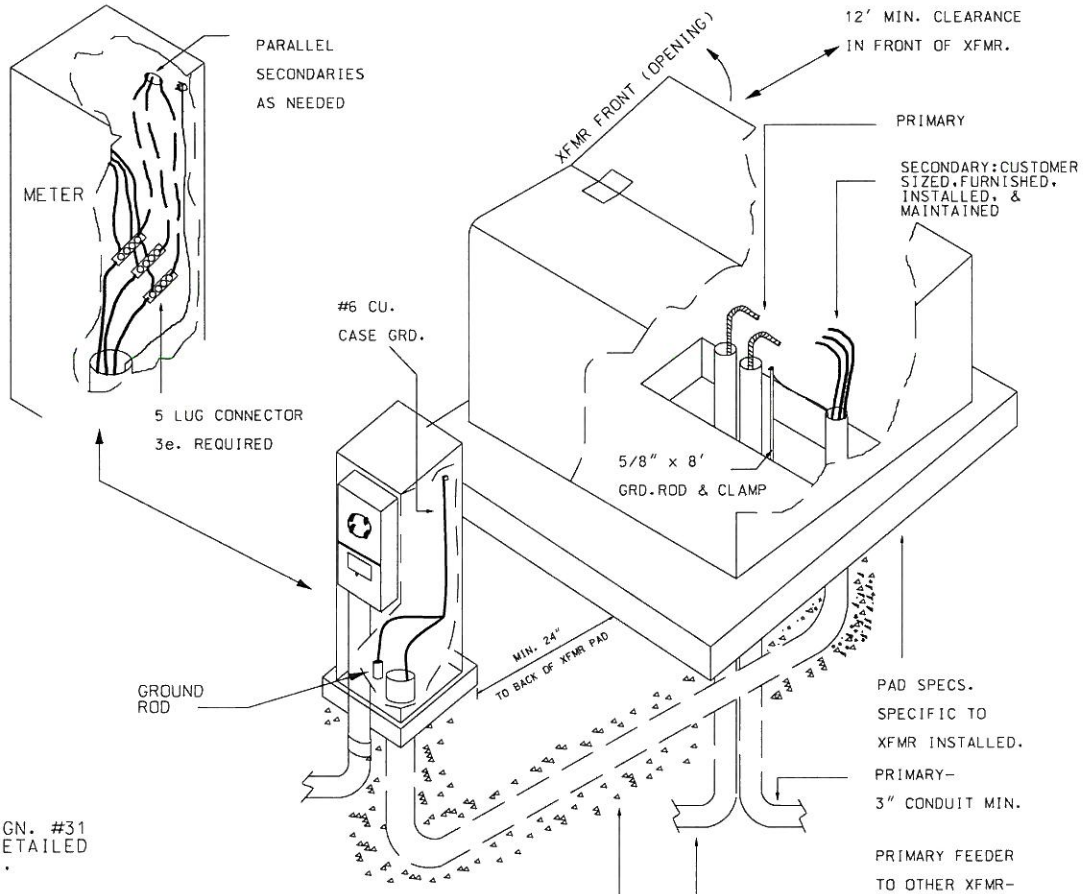

SEE DGN. #31
FOR DETAILED
SPECS.

ALL PVC-SCHEDULE 40, 36" RADIUS 90's
INSPECTION(S) REQUIRED @ EA. STAGE
OF CONSTRUCTION AND PRIOR TO BACK-FILL.

THE CITY OF SAN MARCOS	Electric Utility 1040 St. Hwy. 123 San Marcos, TX 78666 512-393-8300	1 PHASE URD XFMR & METER PEDESTAL PAD		
		ISSUED 7/1/10	SCALE NTS	DRAWING NUMBER 30

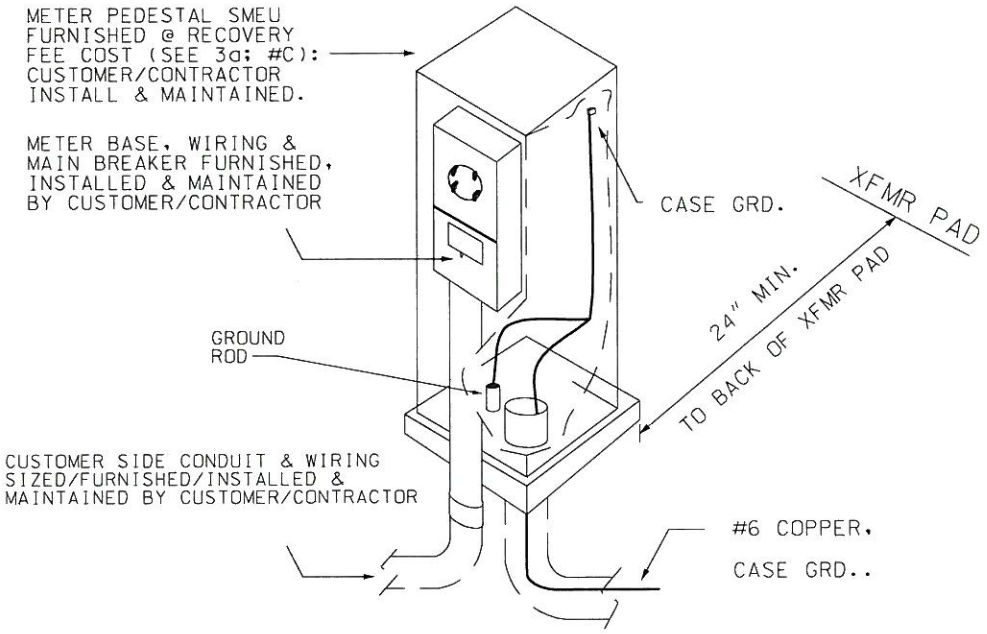

ALL MATERIALS FURNISHED & INSTALLED BY CUSTOMER/CONTRACTOR TO SMEU SPECS.

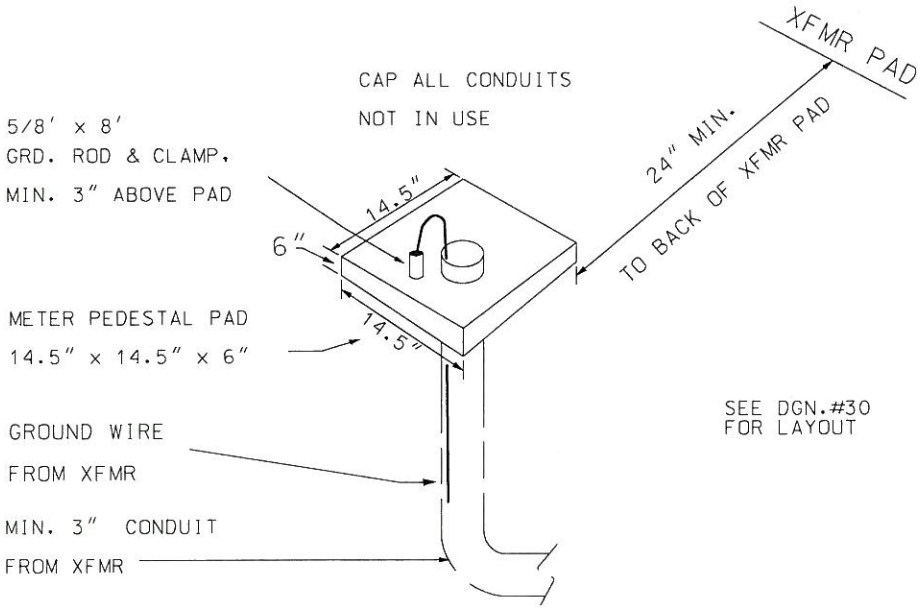

THE CITY OF SAN MARCOS	Electric Utility 1040 St. Hwy. 123 San Marcos, TX 78666 512-393-8300	1 PHASE METER PEDESTAL & PAD SPECS.		
		ISSUED 7/1/10	SCALE NTS	DRAWING NUMBER 31

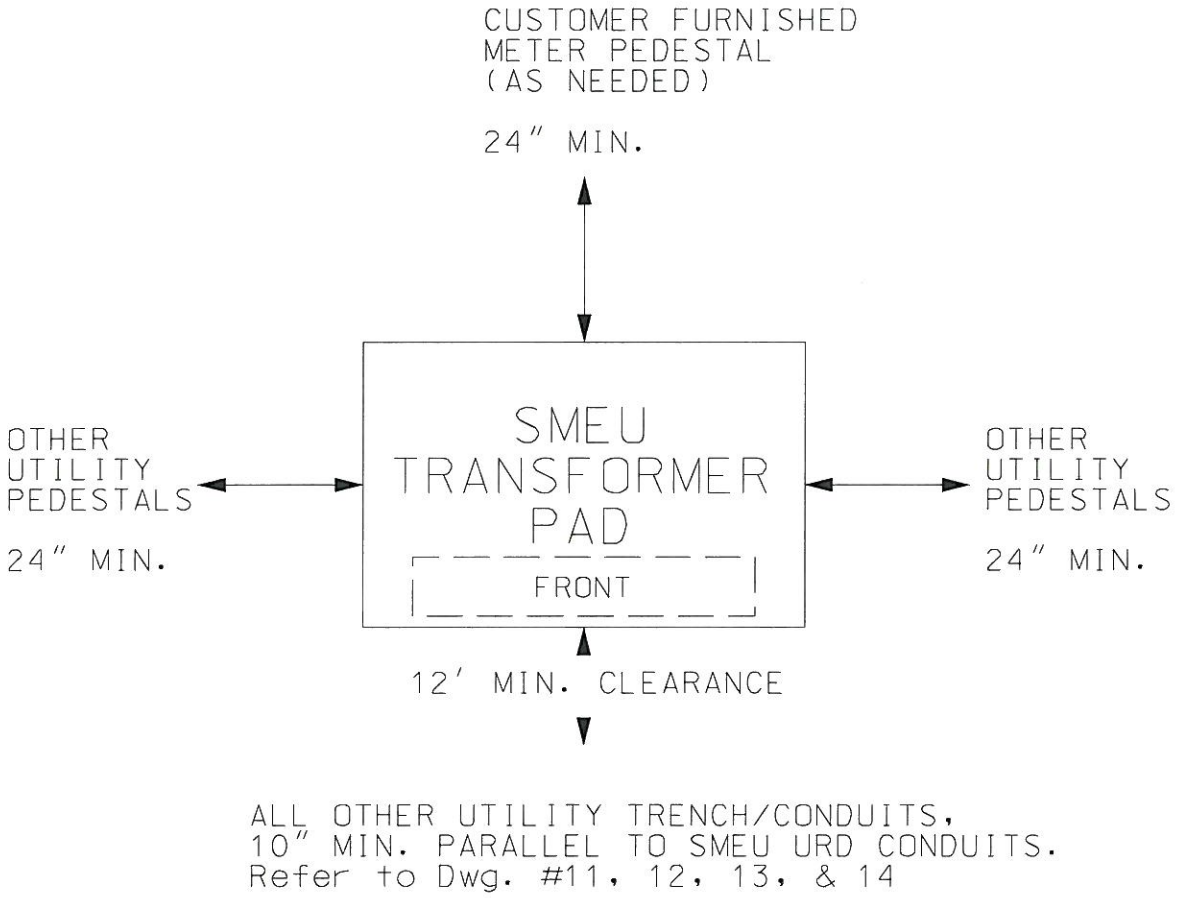

THE CITY OF SAN MARCOS	Electric Utility 1040 St. Hwy. 123 San Marcos, TX 78666 512-393-8300	OTHER URD UTILITY PEDESTAL CLEARANCE SPECS.		
		ISSUED 7/1/10	SCALE NTS	DRAWING NUMBER 32

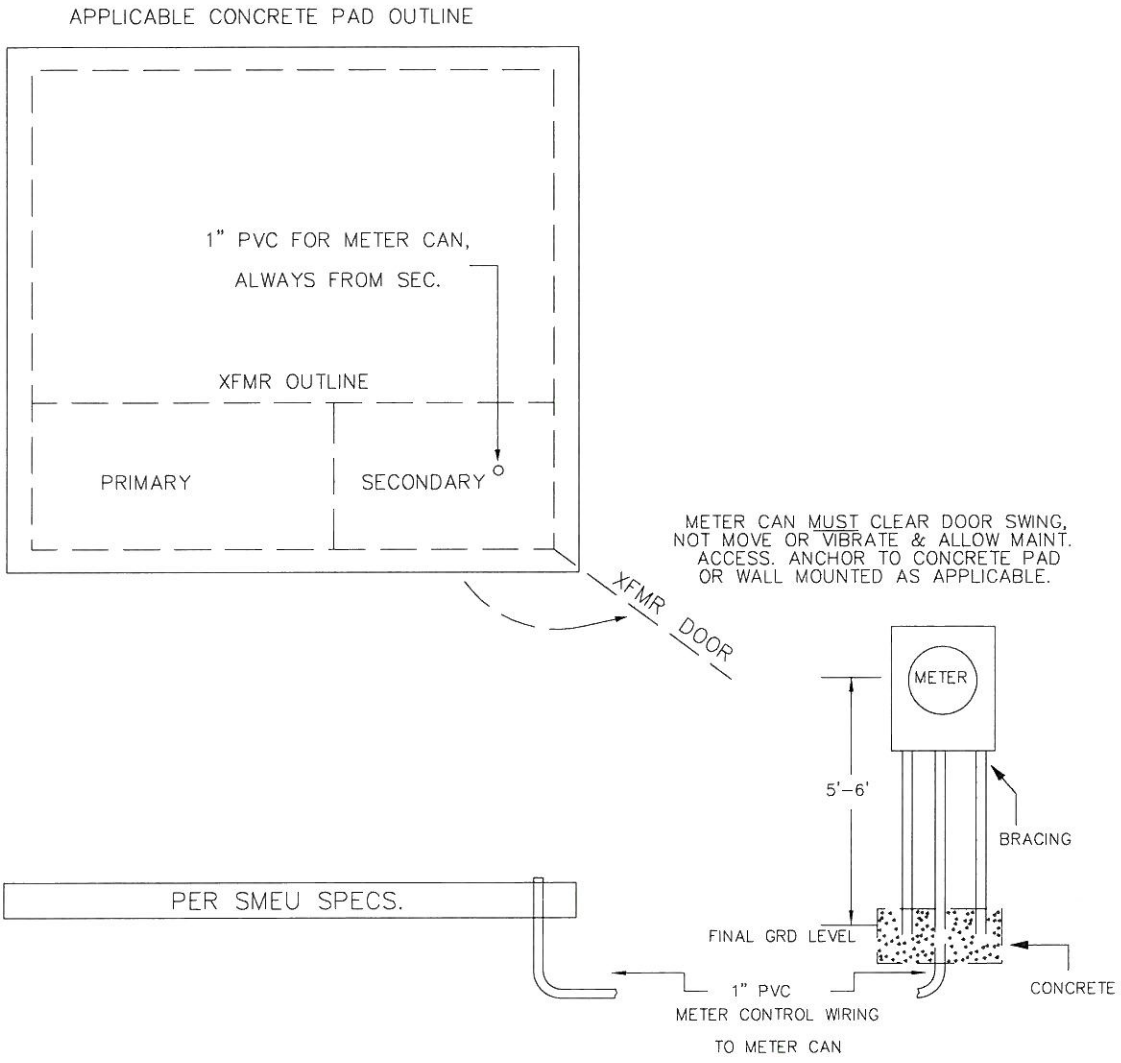

THE CITY OF SAN MARCOS	Electric Utility 1040 St. Hwy. 123 San Marcos, TX 78666 512-393-8300	CT METER-URD XFMR, CONDUIT, & METER SPECS.		
		ISSUED 7/1/09	SCALE NTS	DRAWING NUMBER 33

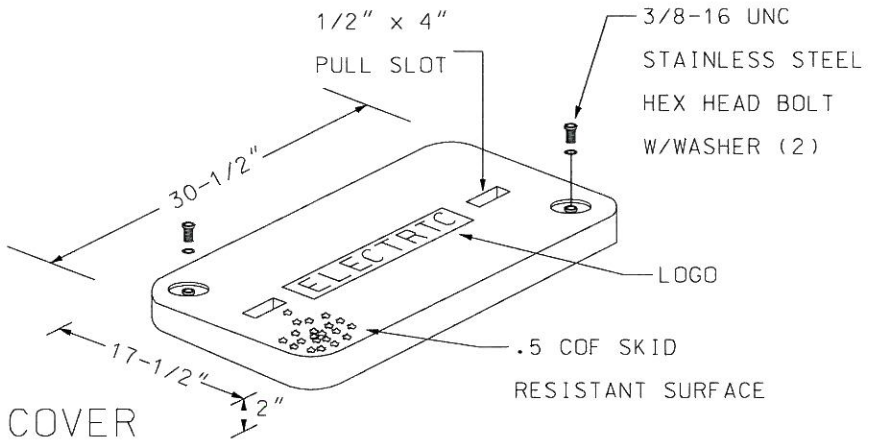

COVER

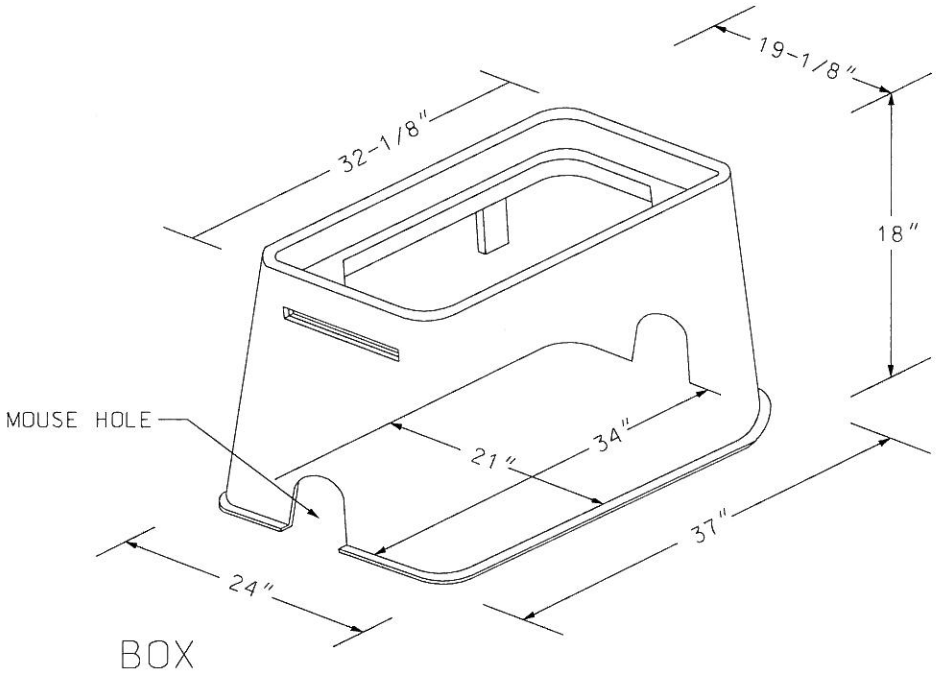

BOX

(QUAZITE) OR EQUIVALENT

THE CITY OF SAN MARCOS	Electric Utility 1040 St. Hwy. 123 San Marcos, TX 78666 512-393-8300	JUNCTION BOX, URD-CUSTOMER FURNISHED		
		ISSUED 7/1/09	SCALE NTS	DRAWING NUMBER 34

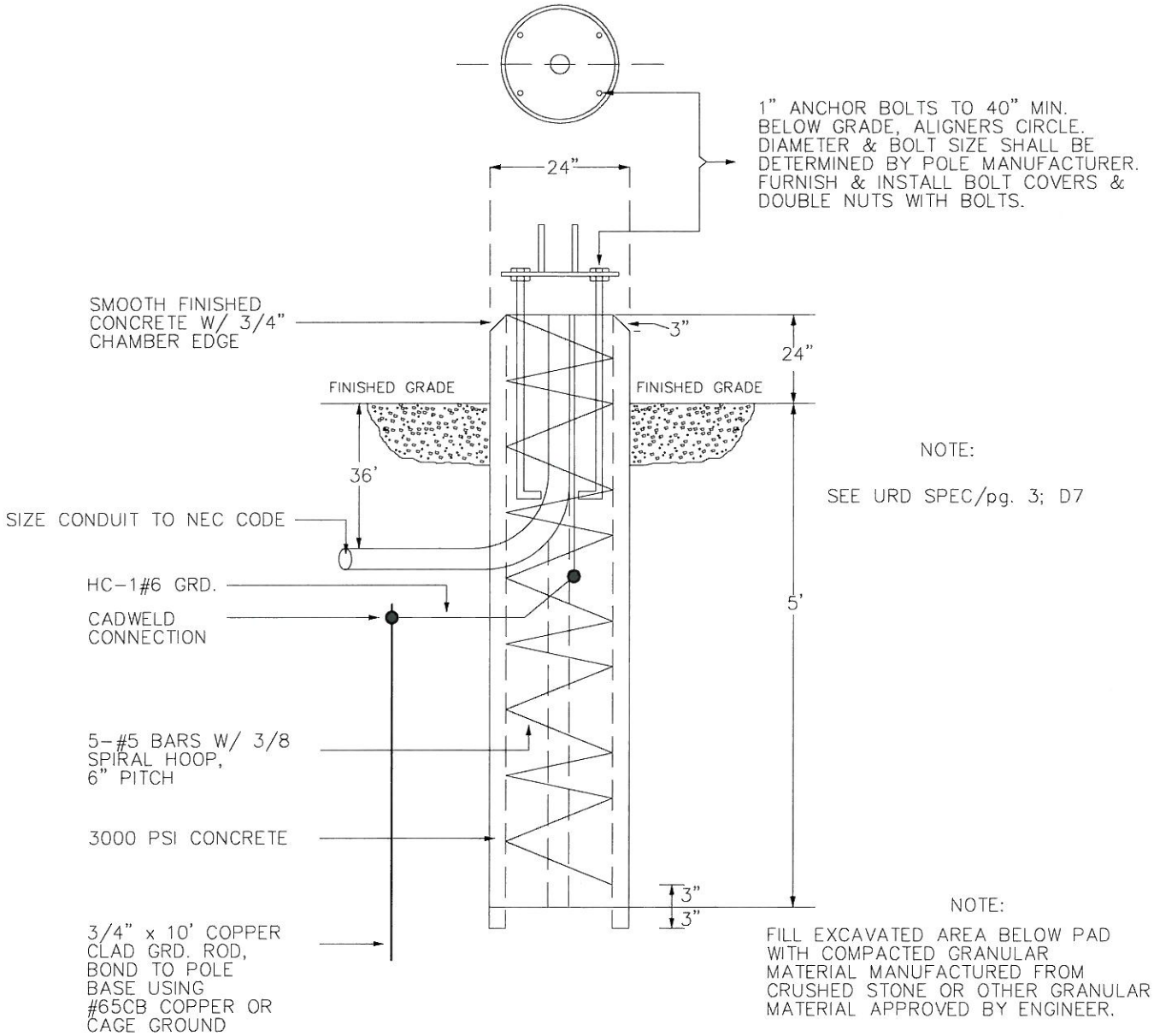

NOTE:

SEE URD SPEC/pg. 3; D7

NOTE:

FILL EXCAVATED AREA BELOW PAD WITH COMPACTED GRANULAR MATERIAL MANUFACTURED FROM CRUSHED STONE OR OTHER GRANULAR MATERIAL APPROVED BY ENGINEER.

THE CITY OF SAN MARCOS	Electric Utility 1040 St. Hwy. 123 San Marcos, TX 78666 512-393-8300	CONCRETE LIGHT STANDARD BASE		
		ISSUED 7/1/09	SCALE NTS	DRAWING NUMBER 35

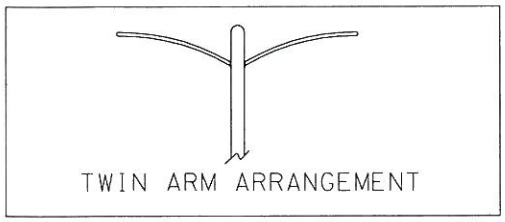

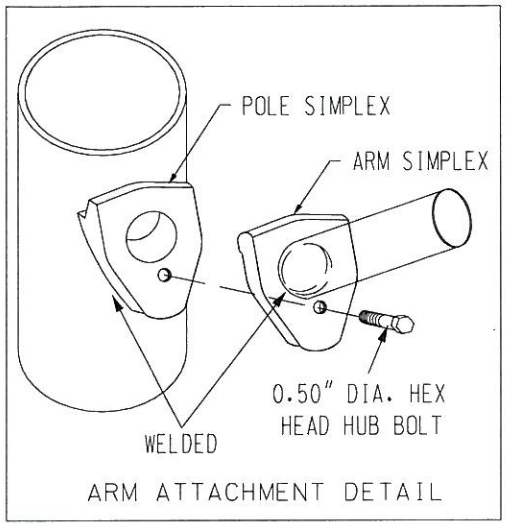

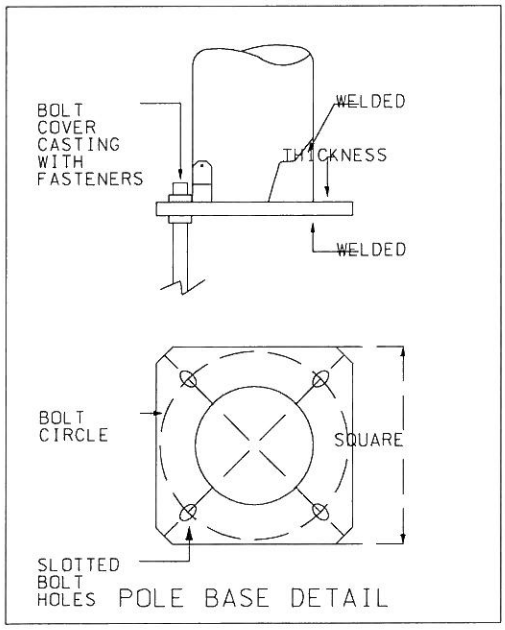

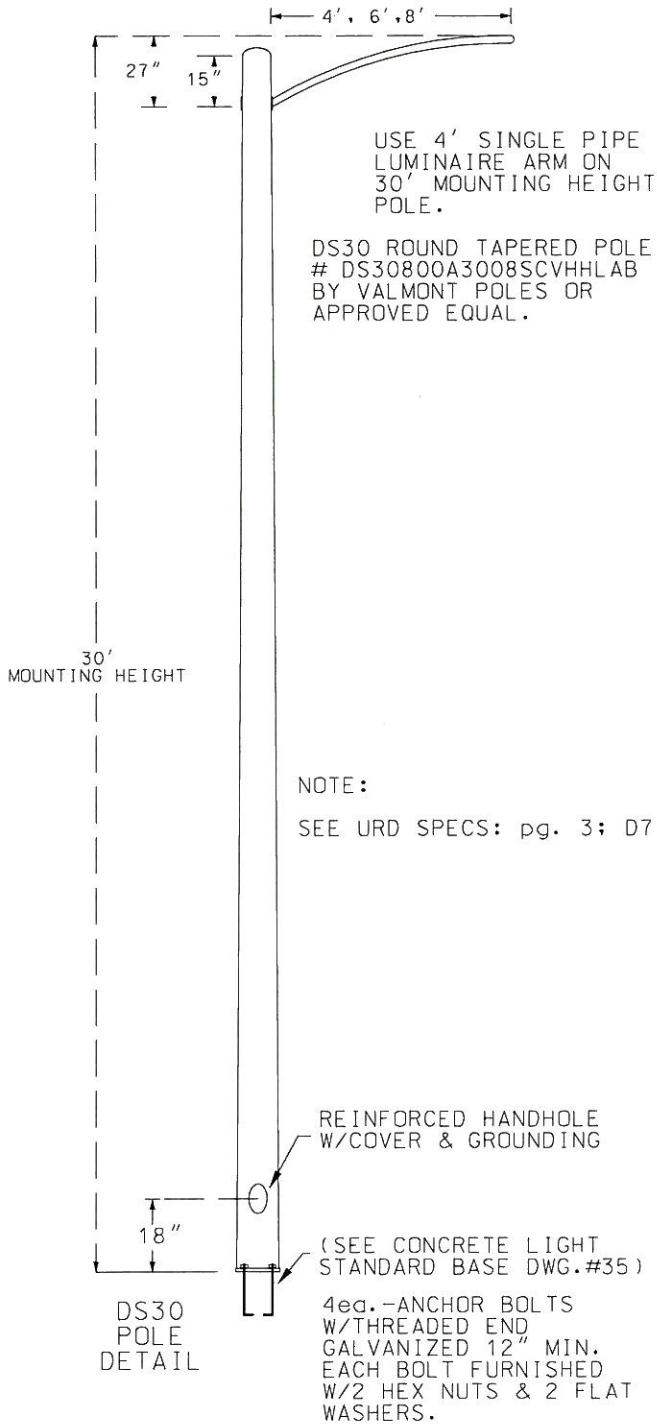

THE CITY OF SAN MARCOS	Electric Utility 1040 St. Hwy. 123 San Marcos, TX 78666 512-393-8300	DS30 ROUNDED TAPERED WITH PIPE LUMINAIRE ARM		
		ISSUED 7/1/09	SCALE NTS	DRAWING NUMBER 36

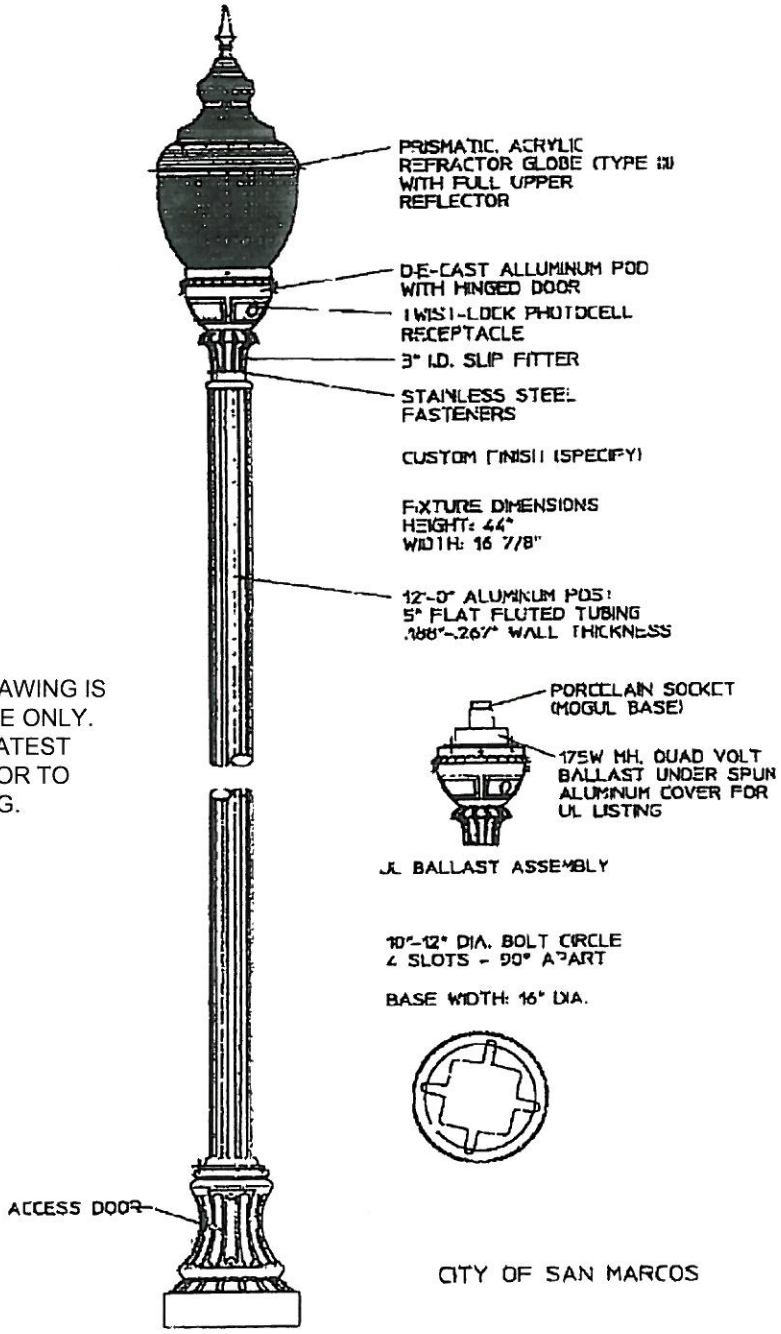

NOTICE: THIS DRAWING IS FOR REFERENCE ONLY. CHECK FOR LATEST REVISION PRIOR TO ORDERING.

S5995 BY HADCO or APPOVED EQUAL

THE CITY OF SAN MARCOS	Electric Utility 1040 St. Hwy. 123 San Marcos, TX 78666 512-393-8300	ANTIQUE LIGHT: SEE URD SPECS. PG. 3, D7 CUSTOMER FURNISHED & INSTALLED TO SMEU SPECS		
		ISSUED 7/1/09	SCALE NTS	DRAWING NUMBER 37

Appendix

METER SOCKET, PEDESTAL TYPE (S2468-LX)
MILBANK

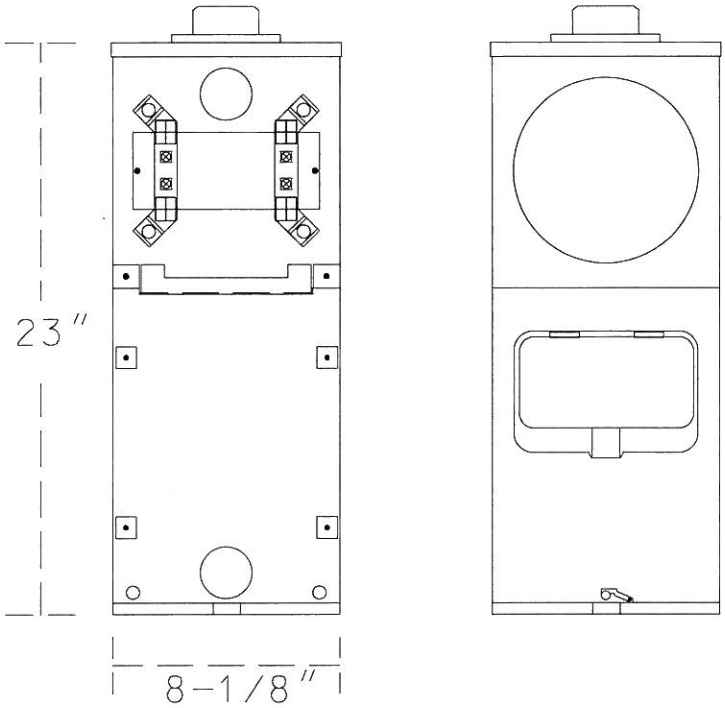

CUSTOMER FURNISHED, INSTALLED &
MAINTAINED TO SMEU SPECS

THE CITY OF SAN MARCOS	Electric Utility 1040 St. Hwy. 123 San Marcos, TX 78666 512-393-8300	200A METER SOCKET (URD PEDESTAL)		
		ISSUED 7/1/09	SCALE NTS	DRAWING NUMBER

REVISIONS JULY, 2010

1. Updates made to Table of Contents, Telephone Contacts, and Public Services-Electric Utility Service Area Boundary
2. Revised URD Specifications to show feed thru transformer pad information, revisions to trench depth, and revisions to width of caution tape for single phase versus three phase primary lines
3. Revised Temporary Construction Loop to reflect change from three to four braces
4. Revised Meter Loop Clearances to show correct clearance over public R.O.W. in the state of Texas and changed wording to match NEC clearance standards
5. Revised conduit in trench details to reflect change in trench depth
6. Revised Utilities Crossing to show installation of sand bedding and cover and to reflect change in trench depth
7. Revised pad specifications to reflect change in trench depth
8. Added additional specification to reflect Padmount Enclosures Clearances
9. Revised pedestal specifications to show minimum distance of 24" to back of transformer pad