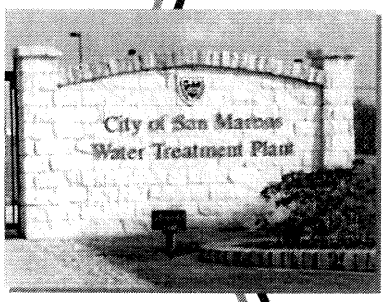

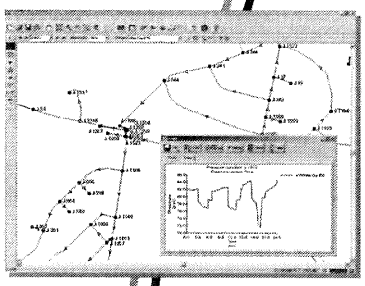

THE CITY OF SAN MARCOS

City of San Marcos Water Master Plan

STATE OF TEXAS
STEPHEN J. COONAN
65516
LICENSED PROFESSIONAL ENGINEER

THE SEAL APPEARING ON THIS DOCUMENT WAS AUTHORIZED BY STEPHEN J. COONAN, TEXAS P.E. NO. 65516, ON 9/10/03
(NOT VALID UNLESS SIGNED)

Volume 2

STATE OF TEXAS
CURTIS R. STEGER
87905
LICENSED PROFESSIONAL ENGINEER

THE SEAL APPEARING ON THIS DOCUMENT WAS AUTHORIZED BY CURTIS R. STEGER, TEXAS P.E. NO. 87905, ON 9/10/03
(NOT VALID UNLESS SIGNED)

September 2003

ALAN PLUMMER ASSOCIATES, INC.
ENVIRONMENTAL ENGINEERS - DESIGNERS - SCIENTISTS

600-0800

LIST OF APPENDICES

VOLUME II

APPENDIX A – Severn Trent Pipeline Services, Report on Pitometer Field Tests

APPENDIX B – Well and Pump Station Schematic Drawings

APPENDIX C – Campo TSZ Data

APPENDIX D – Project Related Technical Memoranda

APPENDIX E – Capital Improvements Program Project Input Forms

APPENDIX A

SEVERN TRENT PIPELINE SERVICES, REPORT ON PITOMETER FIELD TESTS

REPORT
ON
PITOMETER FIELD TESTS
SAN MARCOS, TEXAS
2002

Severn Trent Pipeline Services
Pitometer Water Services Group
Engineers
Chicago, IL

TABLE OF CONTENTS

	Page
Methods And Procedures	2
Task No. 1 - Verify Pump Performance	5
Task No. 2 - Conduct Field "C" Value Tests	21
Analysis Of Results	28
Task No. 3 - Static Calibration	31
Appendix	
Detailed Flow Hydrant Results	34
1101 Highway 80 - No. 7556	35
755 River Rd. - No. 7555	47
Aquarena Springs And Uhland - No. 6792	59
Carlson Cir. - No. 7557	71
Champions And Post - No. 7484	83
Cheatham And McGhehee - No. 7490	84
Chestnut And Walnut - No. 7488	97
Coffee And Posey - No. 7484	110
Comanche And Linsey - No. 6161	123
Craddock And Ranch Road 12 - No. 7157	136
Dixon And Belvin - No. 7550	149
Girard And Earle - No. 7552	162
Hopkins And Bobcat - No. 7158	175
Lago Vista And Crystal River Pkwy. - No. 7553	187
Lockwood And Magnolia - No. 7156	199
M. L. King And Mitchell - No. 7282	211
Southbound Access Road of IH35 - No. 7492	224
Schule And Camaro Way - Nol 7288	237
Summit Ridge And Stagecoach - No. 7488	250
West And Uhland - No. 7565	251

TABLES

No.		Page
2-1	Summary Of Hazen-Williams "C" Factor Test Results	27
2-2	Valves Operated	29
2-3	Map Errors	30
3-1	Pressure Datalogger Locations	32
3-2	Summary Of Flow Hydant Results	33

November, 2002

SEVERN TRENT SERVICES

Severn Trent Pipeline Services, Inc.
Pitometer Water Services
PO Box 6437
Kingwood, TX 77325

Telephone: 281 358 2828
Fax: 281 358 5670

Mr. Steve J. Coonan, P.E.
Alan Plummer Associates, Inc.
6300 La Calma, Suite 400
Austin, Texas 78752

Dear Sir:

In accordance with our agreement, we have completed field testing in the San Marcos water distribution system, and herewith submit our report. The work consisted of the following.

TASK NO. 1 - VERIFY PUMP PERFORMANCE

The head capacity and wire-to-water efficiency curves were determined, where feasible, at the Spring Lakes Pump Station, the Comanche Pump Station and the McCarty Oaks Well.

TASK NO. 2 - CONDUCT FIELD "C" VALUE TESTS

The Hazen-Williams coefficient was determined on a sampling of various sized mains in the distribution system.

TASK NO. 3 - STATIC CALIBRATION

Twenty pressure dataloggers were installed throughout the water distribution system. The dataloggers were recording while fire hydrants at ten different locations were opened and the flow measured.

Respectfuly submitted,

SEVERN TRENT PIPELINE SERVICES
PITOMETER WATER SERVICES GROUP

By: Thomas K. Bean
Thomas K. Bean, P.E.
District Manager

Local Focus, National Vision

METHODS AND PROCEDURES

The suction and discharge heads were recorded with a calibrated electronic pressure datalogger attached to the suction and discharge flanges of the pumps at the Comanche and Spring Lakes Pump Stations. At the McCarty Oaks Well the suction head for a vertical turbine pump pumping out of an acquifer is assumed to be zero. The distance water is lifted from the top of the water in the acquifer to the centerline of the discharge main is added to the discharge of the pump. Any necessary field corrections were made by resetting the zero on the datalogger before each test.

Velocity head is a component of the total dynamic head. It is especially critical on low lift pumps. The inlet velocity head for a vertical turbine pump pumping out of an acquifer is assumed to be zero. The inlet and outlet velocity heads at the Comanche and Spring Lakes Pump Stations were determined by the measured flow and the diameter of the pipe at the point where the inlet and discharge pressures are measured.

Flow rates were determined by measuring the velocity of the water in the pipe with a pitot tube type meter and by measuring the inside diameter of the pipe. Velocity measurements were made using Cole Pitometers, which are approved by the American Society of Mechanical Engineers. Statistical analysis of data obtained with these instruments has indicated a 95 percent confidence level tolerance of plus or minus 2 percent for flow rate measurements.

Local velocity was determined by using an electronic differential pressure transducer. The transducer determined the head differential between the tips of the Pitometer, one of which faced upstream in the pipe, the other downstream. The transducer is part of a device called the Pitometer Computer Recorder (PCR). The device is checked after each test by imposing a test head on the differential pressure transducer. This device has been tested by the Alden Research Laboratories and has been certified to be accurate to within 2 percent of actual flows. Local velocity was calculated from the following formula:

$$V = c\,[2 \times g \times h]^{0.5}$$

where:

V is velocity in feet per second;

c is an instrument coefficient;

g is 32.174 feet per second per second ; and,

h is the differential pressure in feet of water.

The instrument coefficient was determined from the formula below, which represents composite results for calibrations of numerous Pitometers conducted at Alden Research Laboratories:

$$C = 0.8905 - 0.027755 \times \log(v_i)$$

where v_i is the indicated velocity.

The velocity profile was measured by conducting a traverse, in which local velocities were measured at the center and at ten other locations on each diameter. Average velocity was determined using the tangential rule integration technique, in which average velocity is the arithmetic average of the local velocities at ten points, located on either side of the center as follows:

$$R(0.1)^{0.5}, R(0.3)^{0.5}, R(0.5)^{0.5}, R(0.7)^{0.5}, R(0.9)^{0.5}$$

where R is the radius of the pipe.

Average velocity and the velocity at the center of the pipe were used to calculate a velocity factor for the traverse, defined as the ratio of average velocity to center velocity. This factor remains nearly constant for the normal range of velocities.

The area of the pipe was calculated from the measured pipe diameter as determined by a pipe caliper and corrected for the obstruction of the Pitometer.

Flow rates were calculated from the following formula:

$$Q = V_C \times VF \times A \times CF$$

where:

Q is flow rate;

V_C is center velocity in feet per second;

VF is the velocity factor;

A is the pipe cross sectional area; and,

CF is a conversion factor of 448.831 gallons per minute (gpm) per cubic foot per second (cfs).

Calculations were also performed as a check on hydraulic horsepower of the pumps.

$$\text{Hydraulic horsepower} = 2.5278 \times 10^{-4} \times Q \times TDH$$

where:

2.5278 is a conversion constant;

Q is flow in gpm; and,

TDH is the rated total dynamic head in feet.

Where possible, the electric meter supplying electrical power to the pump motors was read during the pump tests in order to determine the wire-to-water efficiency of the pump motor combination.

The results of the various tests are presented in the following tables and charts.

TASK NO. 1 - VERIFY PUMP PERFORMANCE

COMANCHE PUMP STATION

PUMP NO. 1

JULY 10, 2002

Pump Data

Manufacturer	-	Crane Deming
Head	-	140 ft.
Speed	-	1,500 rpm
Discharge	-	1,200 gpm

Motor Data

Manufacturer	-	General Electric
Horsepower	-	60 hp
Voltage	-	460 volts
Speed	-	1,770 rpm

Test Data - Test No. 1

	Test Point No. 1	Test Point No. 2	Test Point No. 3	Test Point No. 4
Discharge - gpm	0	1,280	1,630	1,820
Discharge Head - ft.	217	194	179	169
Suction Head - ft.	55	53	53	51
Total Dynamic Head - ft.	162	141	126	118
Horsepower Out - hp	0	46	52	54

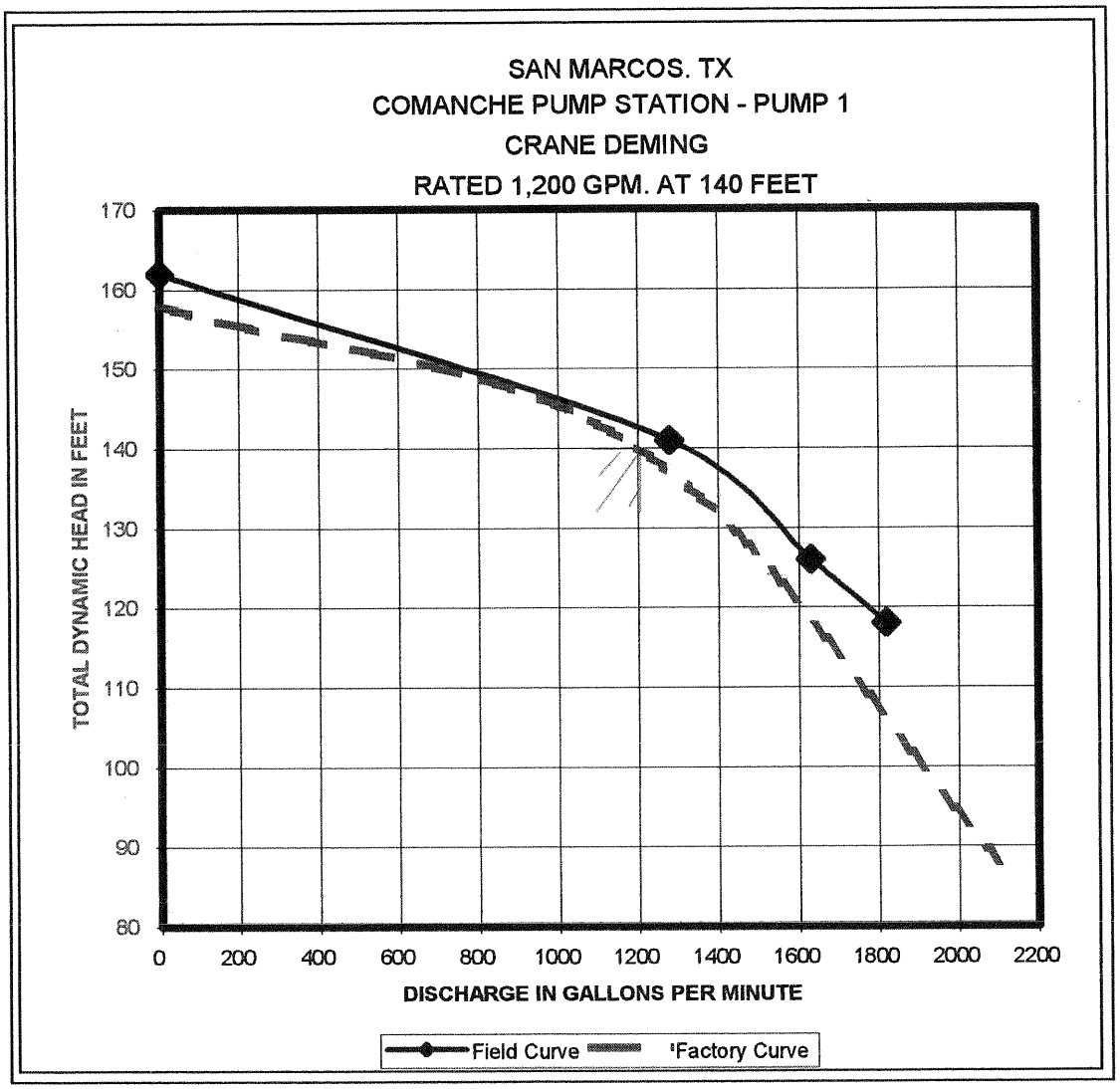
SAN MARCOS. TX
COMANCHE PUMP STATION - PUMP 1
CRANE DEMING
RATED 1,200 GPM. AT 140 FEET
TOTAL DYNAMIC HEAD IN FEET
170
160
150
140
130
120
110
100
90
80
0
200
400
600
800
1000
1200
1400
1600
1800
2000
2200
DISCHARGE IN GALLONS PER MINUTE
Field Curve
Factory Curve

COMANCHE PUMP STATION

PUMP NO. 2

JULY 10, 2002

Pump Data

Manufacturer	-	Crane Deming
Head	-	140 ft.
Speed	-	1,750 rpm
Discharge	-	600 gpm

Motor Data

Manufacturer	-	General Electric
Horsepower	-	30 hp
Voltage	-	460 volts
Speed	-	1,750 rpm

Test Data - Test No. 2

	Test Point No. 1	Test Point No. 2	Test Point No. 3	Test Point No. 4
Discharge - gpm	0	580	750	800
Discharge Head - ft.	242	224	187	162
Suction Head - ft.	58	55	53	48
Total Dynamic Head - ft.	184	169	134	114
Horsepower Out - hp	0	25	25	23

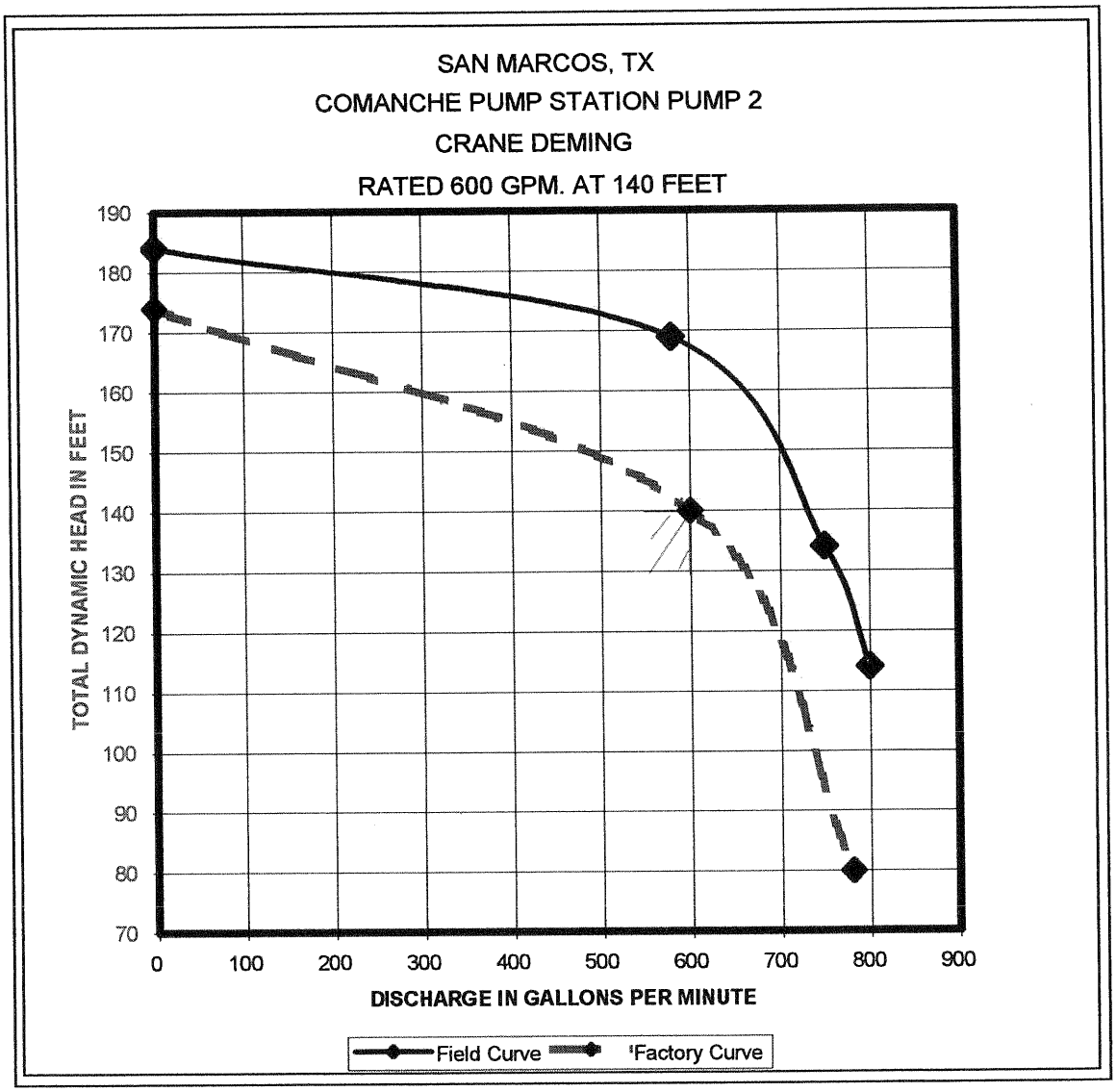
SAN MARCOS, TX
COMANCHE PUMP STATION PUMP 2
CRANE DEMING
RATED 600 GPM. AT 140 FEET
TOTAL DYNAMIC HEAD IN FEET
190
180
170
160
150
140
130
120
110
100
90
80
70
0
100
200
300
400
500
600
700
800
900
DISCHARGE IN GALLONS PER MINUTE
Field Curve
'Factory Curve

COMANCHE PUMP STATION

PUMP NO. 3

JULY 10, 2002

Pump Data

Manufacturer	-	Crane Deming
Head	-	140 ft.
Speed	-	1,800 rpm
Discharge	-	600 gpm

Motor Data

Manufacturer	-	General Electric
Horsepower	-	30 hp
Voltage	-	460 volts
Speed	-	1,750 rpm

Test Data - Test No. 3

	Test Point No. 1	Test Point No. 2	Test Point No. 3	Test Point No. 4
Discharge - gpm	0	500	650	850
Discharge Head - ft.	228	215	198	168
Suction Head - ft.	58	55	51	48
Total Dynamic Head - ft.	170	160	147	120
Horsepower Out - hp	0	20	24	26

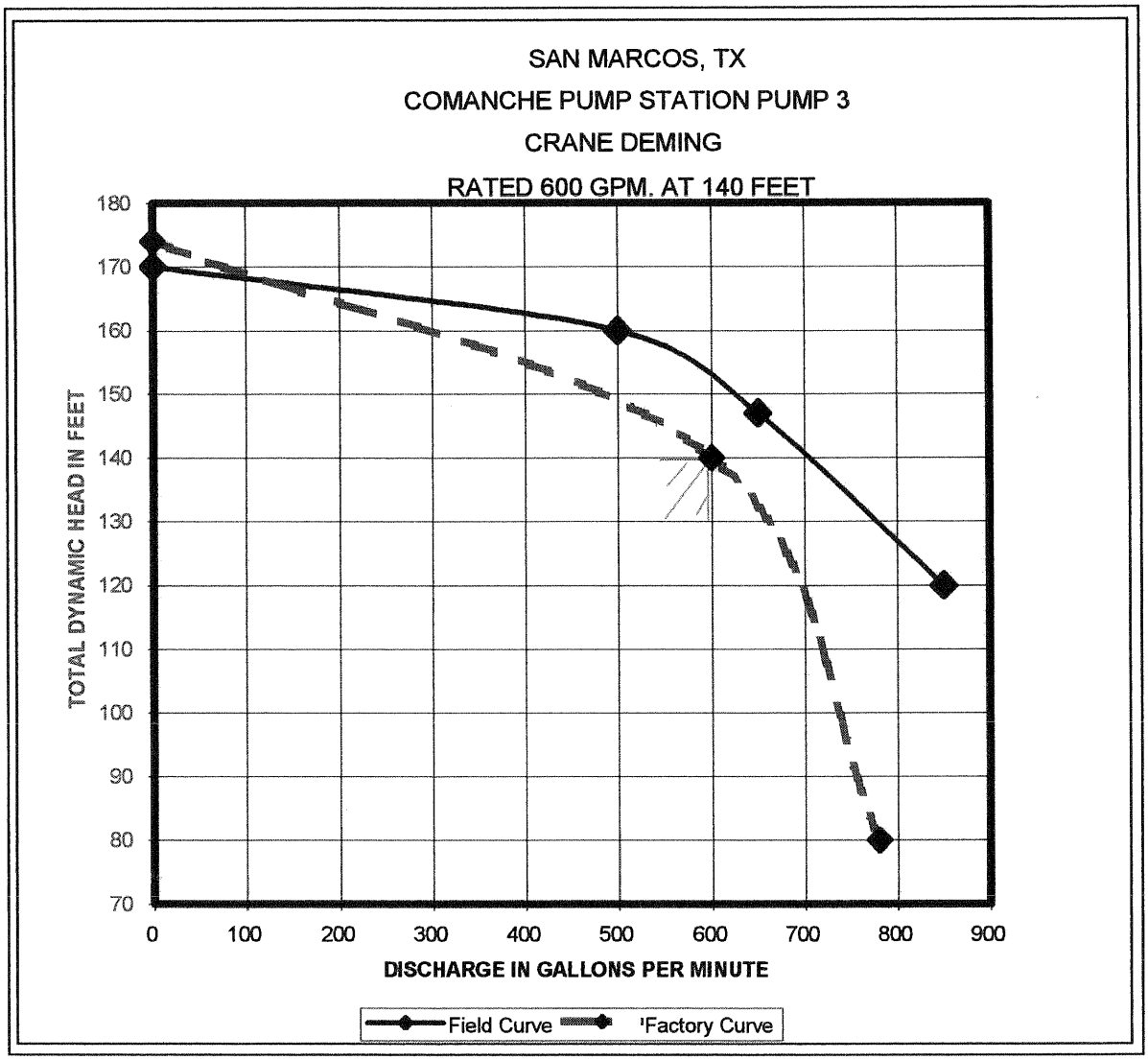
SAN MARCOS, TX
COMANCHE PUMP STATION PUMP 3
CRANE DEMING
RATED 600 GPM. AT 140 FEET
TOTAL DYNAMIC HEAD IN FEET
180
170
160
150
140
130
120
110
100
90
80
70
0
100
200
300
400
500
600
700
800
900
DISCHARGE IN GALLONS PER MINUTE
Field Curve
'Factory Curve

COMANCHE PUMP STATION

PUMP NO. 4

JULY 10, 2002

Pump Data

Manufacturer	-	Crane Deming
Head	-	140 ft.
Speed	-	1,800 rpm
Discharge	-	600 gpm

Motor Data

Manufacturer	-	Gould Electric
Horsepower	-	30 hp
Voltage	-	460 volts
Speed	-	1,750 rpm

Test Data - Test No. 4

	Test Point No. 1	Test Point No. 2	Test Point No. 3	Test Point No. 4
Discharge - gpm	0	600	760	840
Discharge Head - ft.	240	220	177	153
Suction Head - ft.	55	51	48	46
Total Dynamic Head - ft.	185	169	129	107
Horsepower Out - hp	0	26	25	23

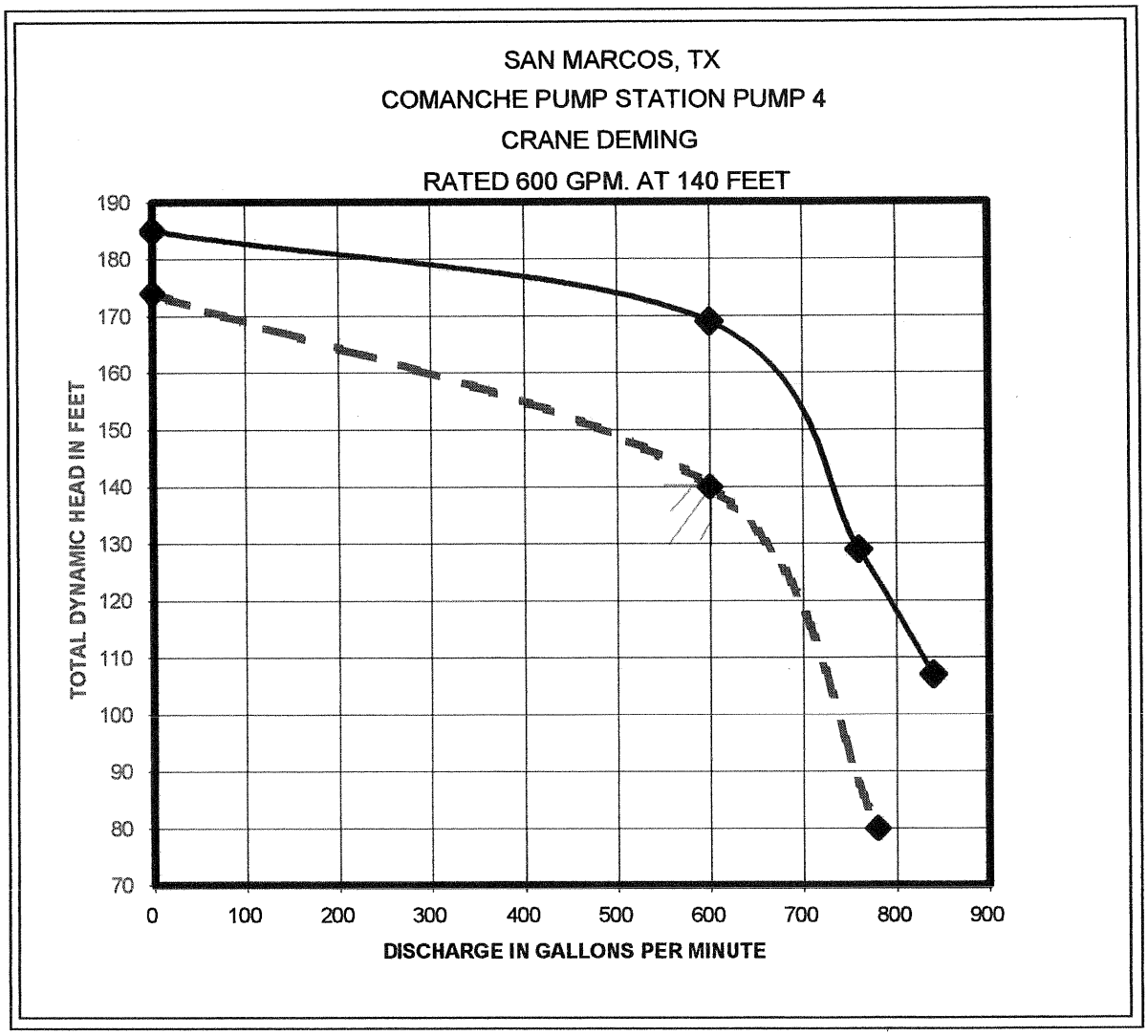
SAN MARCOS, TX
COMANCHE PUMP STATION PUMP 4
CRANE DEMING
RATED 600 GPM. AT 140 FEET
TOTAL DYNAMIC HEAD IN FEET
190
180
170
160
150
140
130
120
110
100
90
80
70
0
100
200
300
400
500
600
700
800
900
DISCHARGE IN GALLONS PER MINUTE

SPRING LAKE PUMP STATION

PUMP NO. 1

JULY 10, 2002

Pump Data

Manufacturer	-	Worthington
Head	-	210 feet
Speed	-	Not available
Discharge	-	1,200 gpm

Motor Data

Manufacturer	-	General Electric
Horsepower	-	125 hp
Voltage	-	460 volts
Speed	-	1,780 rpm

Test Data - Test No. 1

	Test Point No. 1	Test Point No. 2	Test Point No. 3	Test Point No. 4
Discharge - gpm	0	1,220	1,650	1,860
Discharge Head - ft.	309	291	267	252
Suction Head - ft.	62	62	62	62
Total Dynamic Head - ft.	247	229	205	190
Horsepower Out - hp	0	71	85	89
Horsepower In - hp	0	115	100	123
Wire-To-Water Efficiency	0.00	0.61	0.86	0.72

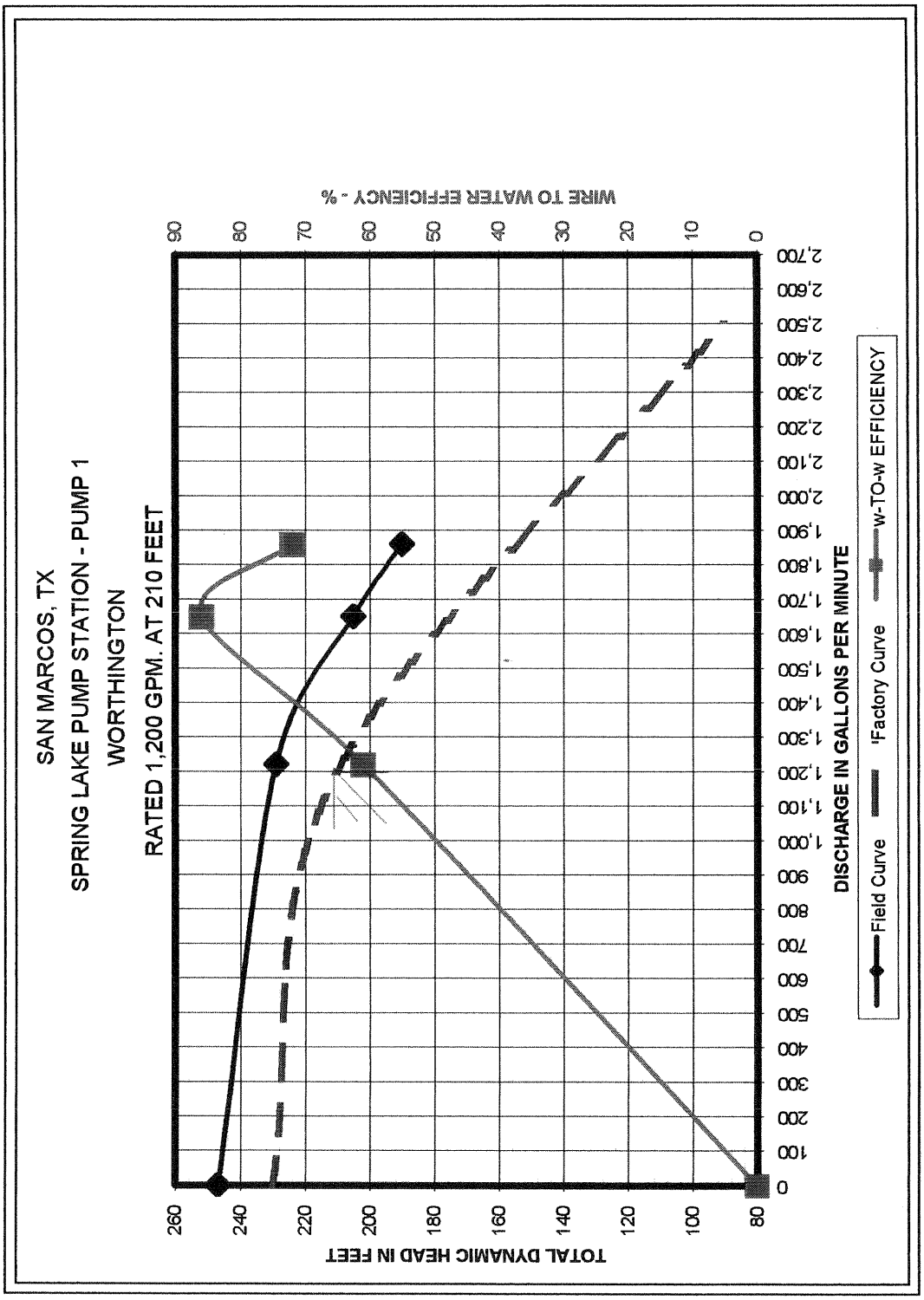
SAN MARCOS, TX
SPRING LAKE PUMP STATION - PUMP 1
WORTHINGTON
RATED 1,200 GPM. AT 210 FEET
TOTAL DYNAMIC HEAD IN FEET
260
240
220
200
180
160
140
120
100
80
WIRE TO WATER EFFICIENCY - %
90
80
70
60
50
40
30
20
10
0
DISCHARGE IN GALLONS PER MINUTE
0
100
200
300
400
500
600
700
800
900
1,000
1,100
1,200
1,300
1,400
1,500
1,600
1,700
1,800
1,900
2,000
2,100
2,200
2,300
2,400
2,500
2,600
2,700
Field Curve
'Factory Curve
w-TO-w EFFICIENCY

SPRING LAKE PUMP STATION

PUMP NO. 2

JULY 10, 2002

Pump Data

Manufacturer	-	Not available
Head	-	180 ft.
Speed	-	1,770 rpm
Discharge	-	2,200 gpm

Motor Data

Manufacturer	-	Not available
Horsepower	-	Not available
Voltage	-	460 volts
Speed	-	1,780 rpm

Test Data - Test No. 2

	Test Point No. 1	Test Point No. 2	Test Point No. 3	Test Point No. 4
Discharge - gpm	0	1,170	1,620	1,910
Discharge Head - ft.	275	262	250	240
Suction Head - ft.	62	60	62	60
Total Dynamic Head - ft.	213	202	188	180
Horsepower Out - hp	0	60	77	87
Horsepower In - hp	0	120	128	131
Wire-To-Water Efficiency	0.00	0.50	0.60	0.66

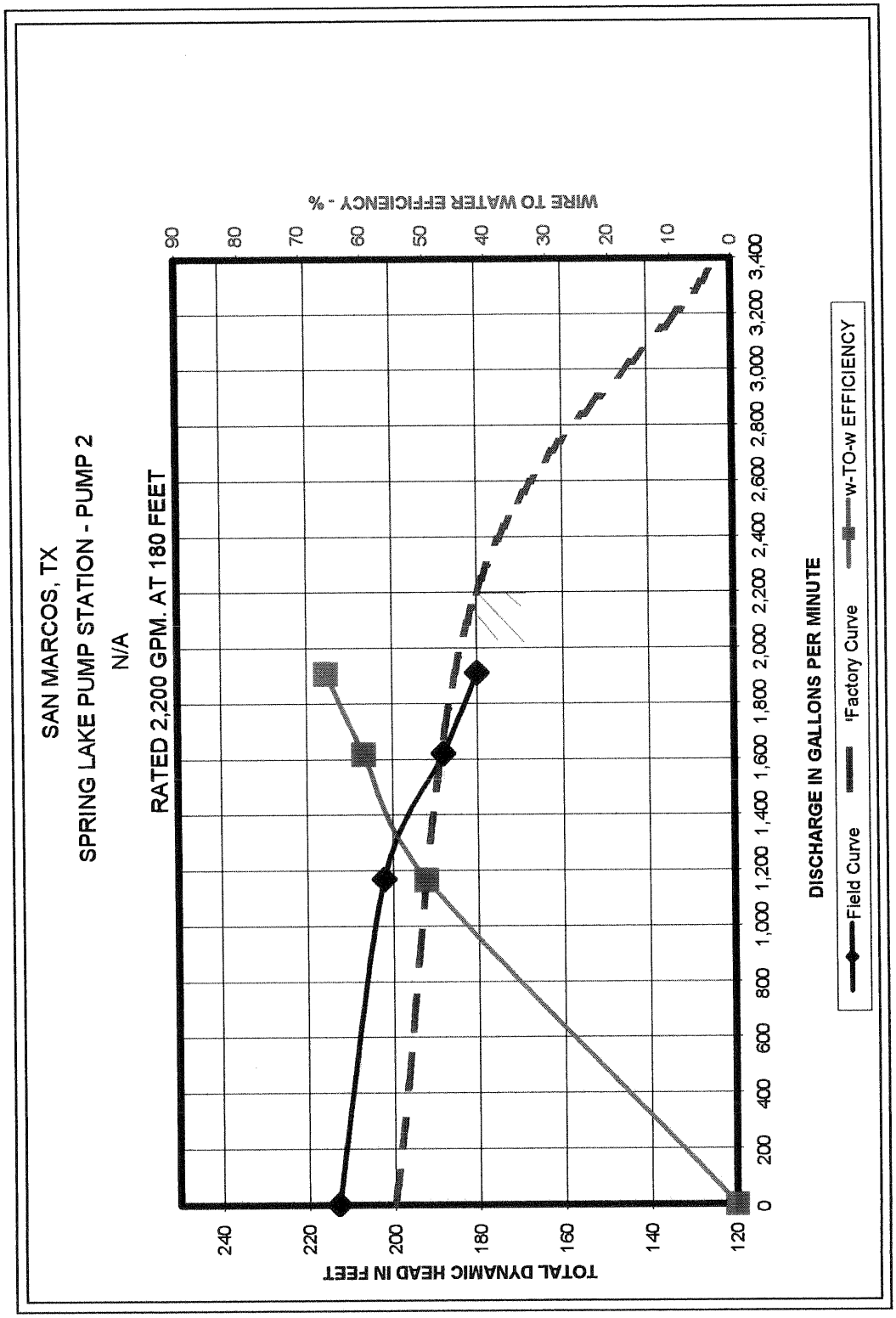
SAN MARCOS, TX
SPRING LAKE PUMP STATION - PUMP 2
N/A
RATED 2,200 GPM. AT 180 FEET
TOTAL DYNAMIC HEAD IN FEET
240
220
200
180
160
140
120
WIRE TO WATER EFFICIENCY - %
90
80
70
60
50
40
30
20
10
0
0
200
400
600
800
1,000
1,200
1,400
1,600
1,800
2,000
2,200
2,400
2,600
2,800
3,000
3,200
3,400
DISCHARGE IN GALLONS PER MINUTE
Field Curve
Factory Curve
w-TO-w EFFICIENCY

SPRING LAKE PUMP STATION

PUMP NO. 4

JULY 10, 2002

Pump Data

Manufacturer	-	Not available
Head	-	210 ft.
Speed	-	Not available
Discharge	-	1,200 gpm

Motor Data

Manufacturer	-	Westinghouse
Horsepower	-	125 hp
Voltage	-	460 volts
Speed	-	1,775 rpm

Test Data - Test No. 3

	Test Point No. 1	Test Point No. 2	Test Point No. 3	Test Point No. 4
Discharge - gpm	0	1,190	1,500	1,920
Discharge Head - ft.	323	294	273	247
Suction Head - ft.	60	60	60	60
Total Dynamic Head - ft.	263	234	213	187
Horsepower Out - hp	0	70	81	91
Horsepower In - hp	0	116	115	137
Wire-To-Water Efficiency	0.00	0.60	0.70	0.66

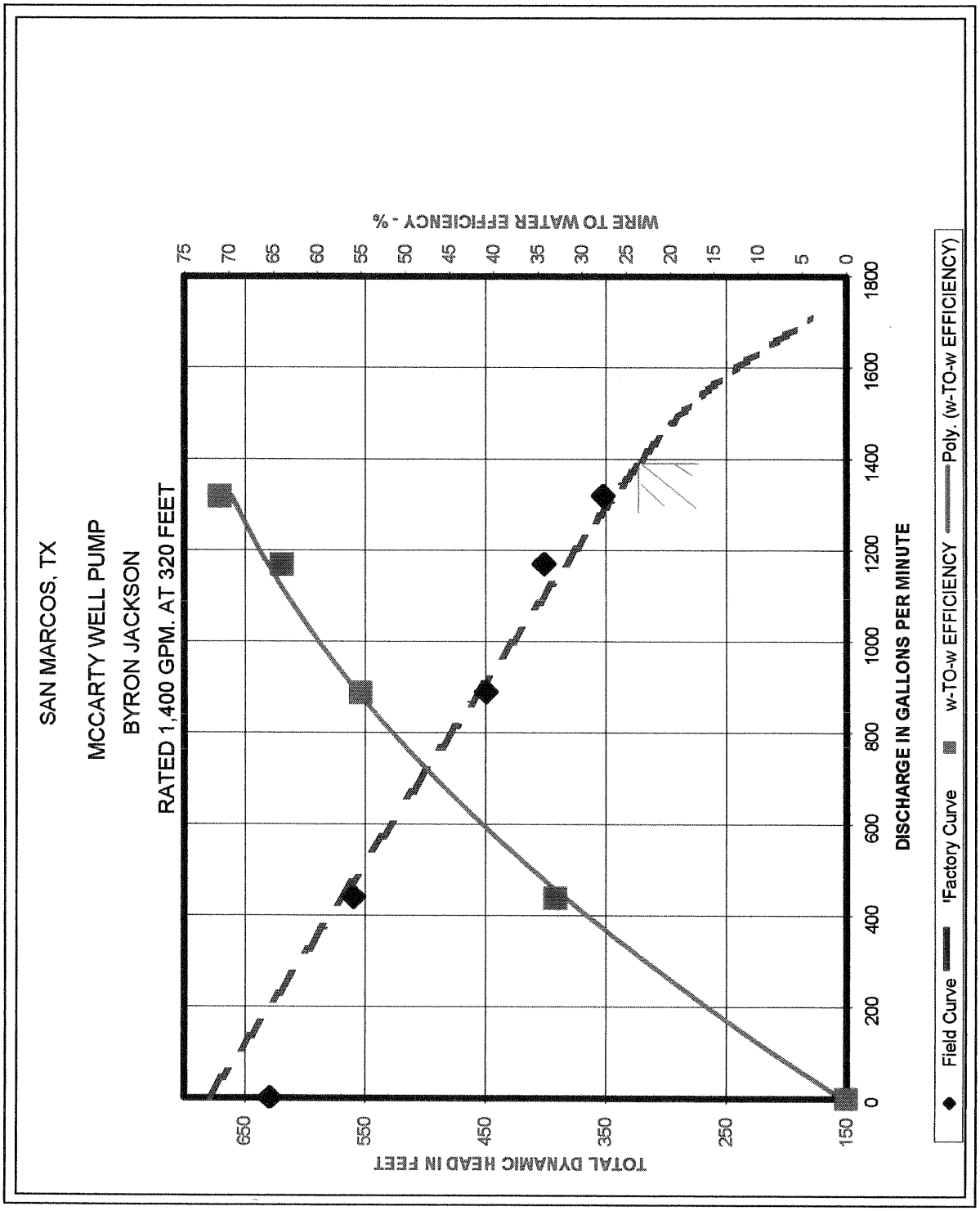
SAN MARCOS, TX
MCCARTY WELL PUMP
BYRON JACKSON
RATED 1,400 GPM. AT 320 FEET
TOTAL DYNAMIC HEAD IN FEET
650
550
450
350
250
150
WIRE TO WATER EFFICIENCY - %
75
70
65
60
55
50
45
40
35
30
25
20
15
10
5
0
0
200
400
600
800
1000
1200
1400
1600
1800
DISCHARGE IN GALLONS PER MINUTE
Field Curve
Factory Curve
w-TO-w EFFICIENCY
Poly. (w-TO-w EFFICIENCY)

TASK NO. 2 - CONDUCT FIELD "C" VALUE TESTS

Loss of head tests were conducted at selected locations in the San Marcos water distribution system. The purpose of a loss of head test is to relate the friction loss in the pipe due to pipe wall friction to the flow rate in the pipe. The net result of these measurements is the determination of the Hazen-Williams coefficient for each pipe section tested. The Hazen- Williams coefficient is a unitless coefficient which gives an indication of the relative carrying capacity of a pipe to that of a new pipe. A coefficient of 130 is typical of new pipe. A coefficient of 65 means that the pipe has half the carrying capacity of a new pipe of the same internal diameter. The Hazen-Williams equation is an empirical equation which was derived in the early twentieth century from the results of thousands of laboratory tests on pipes of varying size, age and pipe material. It is reliable within the normal range of pipe velocities encountered in a water distribution system.

There are three basic methods of conducting a loss of head test on a water main. The first is called a parallel hose test and involves a direct measurement of the head loss by use of a parallel hose running between the test inlet and outlet. The inlet and outlet water levels are balanced directly through a pressure differential transmitter. The flow can be measured either with a Pitometer rodmeter or hydrant pitot tube. This test is popular for short sections of pipe, but is limited by the length of hose required for the parallel hose connection.

The second method involves a standard gauge test, where the inlet and outlet pressures are measured with a pressure recorder or datalogger, the pressures are converted to head in feet, and are added to the site elevation to determine inlet and outlet hydraulic water levels. The difference in the water levels is the friction loss in the pipe over the distance tested (pipe length between inlet and outlet). This type of test has the advantage of testing much longer sections of pipe, but has the disadvantage of requiring accurate site elevations at the inlet and outlet test locations.

The third method is the differential flow method, where three distinct flow rates are induced in the test section and the pressure heads at inlet and outlet are once again recorded with a pressure recorder or datalogger. The differential slope (variation of the friction loss over distance) is calculated and related to the ratio of the flow rates raised to the 1.85 power. This method has the advantage that it does not require elevations for the calculations. It has the disadvantage that it can be difficult to obtain three different flow rates on a large main. The flow ratio should be approximately 1:2:3 in order to obtain enough differential loss at each flow.

The results of the "C" value tests are presented on the following pages.

Test No. 1 - July 30, 2002 - Parallel Hose Test

Location	Belvin between Mitchell and Veramendi
Size of Main - in.	6
Flow Rate - mgd	0.507
Total Loss - ft.	18.76
Length - ft.	558
Slope - ft./1,000 ft.	33.62
H-W Coefficient	70
Type of Pipe Material	Cast iron
Percent of Capacity When New (C = 130)	54

Test No. 2 - July 19, 2002 - Parallel Hose Test

Location	Clovis Barker Rd.
Size of Main - in.	12
Flow Rate - mgd	1.049
Total Loss - ft.	5.60
Length - ft.	2,000
Slope-ft./1,000 ft.	2.80
H-W Coefficient	90
Percent of Capacity When New (C = 130)	69

Test No. 3 - July 19, 2002 - Parallel Hose Test

Location	Dutton St.
Size of Main - in.	10
Flow Rate - mgd	1.848
Total Loss - ft.	25.46
Length - ft.	1,658
Slope - ft./1,000 ft.	15.36
H-W Coefficient	102
Percent of Capacity When New (C = 130	78

Test No. 4 - July 18, 2002 - Parallel Hose Test

Location	E. Sierra
Size of Main - in.	8
Flow Rate - mgd	0.875
Total Loss - ft.	29.26
Length - ft.	1,850
Slope - ft./1,000 ft.	15.81
H-W Coefficient	85
Percent of Capacity When New (C = 130)	66

Test No. 5 - July 31, 2002 - Parallel Hose Test

Location	Ellis between Knox and Alabama
Size of Main - in.	6
Flow Rate - mgd	0.724
Total Loss - ft.	15.31
Length - ft.	784
Slope - ft./1,000 ft.	19.53
H-W Coefficient	134
Type of Pipe Material	Cast iron
Percent of Capacity When New (C = 130)	103

Test No. 6 - July 30, 2002 - Parallel Hose Test

Location	Franklin between Clyde and Columbia
Size of Main - in.	12
Flow Rate - mgd	1.170
Total Loss - ft.	2.66
Length - ft.	875
Slope - ft./1,000 ft.	3.04
H-W Coefficient	96
Percent of Capacity When New (C = 130)	74

Test No. 7 - July 31, 2002 - Parallel Hose Test

Location	Lancaster
Size of Main - in.	6
Flow Rate - mgd	0.916
Total Loss - ft.	30.37
Length - ft.	784
Slope - ft./1,000 ft.	38.74
H-W Coefficient	117
Type of Pipe Material	Cast iron
Percent of Capacity When New (C = 130)	90

Test No. 8 - July 31, 2002 - Parallel Hose Test

Location	Linda between Sherbarb and Bugg
Size of Main - in.	6
Flow Rate - mgd	0.802
Total Loss - ft.	20.11
Length - ft.	868
Slope - ft./1,000 ft.	23.18
H-W Coefficient	136
Type of Pipe Material	Cast iron
Percent of Capacity When New (C = 130)	100

Test No. 9 - July 31, 2002 - Parallel Hose Test

Location	Patricia between Woodcrest and Ebony
Size of Main - in.	6
Flow Rate - mgd	0.705
Total Loss - ft.	2.24
Length - ft.	563
Slope - ft./1,000 ft.	3.97
H-W Coefficient	309
Type of Pipe Material	Cast iron
Percent of Capacity When New (C = 130)	238

NOTE: The results of this test are not correct. It is suspected that a valve was open within the test section.

Test No. 10 - July 18, 2002 - Parallel Hose Test

Location	Pecan St.
Size of Main - in.	8
Flow Rate - mgd	0.840
Total Loss - ft.	6.09
Length - ft.	1,077
Slope - ft./1,000 ft.	5.66
H-W Coefficient	143
Percent of Capacity When New (C = 130)	100

Test No. 11 - July 30, 2002 - Standard Gauge Test

Location	From the SWTP to the ARV at STA 25+50		
Size of Main - in.		24	
Flow Rate - mgd		5.860	
Head - ft.	264.30		270.47
Elevation - ft.	593.42		584.08
Water Level - ft.	857.72		854.55
Total Loss - ft.		3.17	
Length - ft.		3,110	
Slope - ft./1,000 ft.		1.02	
H-W Coefficient		140	
Type of Pipe Material		Ductile iron	
Date Installed or Cleaned		2000	
Percent of Capacity When New (C = 130)		108	

Test No. 12 - July 30, 2002 - Standard Gauge Test

Location		From the ARV at STA 25+50 to the ARV at STA 66+30	
Size of Main - in.		24	
Flow Rate - mgd		5.860	
Head - ft.	270.47		254.62
Elevation - ft.	584.08		592.68
Water Level - ft.	854.55		847.30
Total Loss - ft.		7.25	
Length - ft.		4,080	
Slope - ft./1,000 ft.		1.78	
H-W Coefficient		104	
Type of Pipe Material		Ductile iron	
Date Installed or Cleaned		2000	
Percent of Capacity When New (C = 130)		80	

Test No. 13 - July 30, 2002 - Standard Gauge Test

Location		From the SWTP to the ARV at STA 66+30	
Size of Main - in.		24	
Flow Rate - mgd		5.860	
Head - ft.	264.30		254.62
Elevation - ft.	593.42		592.68
Water Level - ft.	857.72		847.30
Total Loss - ft.		10.42	
Length - ft.		7,190	
Slope - ft./1,000 ft.		1.45	
H-W Coefficient		116	
Type of Pipe Material		Ductile	
Date Installed or Cleaned		2000	
Percent of Capacity When New (C = 130)		89	

TABLE NO. 2-1

SUMMARY OF HAZEN-WILLIAMS "C" FACTOR TEST RESULTS

Test No.	Test Location	Pipe Size - inch	Hazen-Williams Coefficient
1	Belvin between Mitchell and Veramendi	6	70
2	Clovis Barker Rd.	12	90
3	Dutton St.	10	102
4	E. Sierra	8	85
5	Ellis between Knox and Alabama	6	134
6	Franklin between Clyde and Columbia	12	96
7	Lancaster	6	117
8	Linda between Sherbarb and Bugg	6	136
10	Pecan St.	8	143
11	From the SWTP to the ARV at STA 25+50	24	140
12	From the ARV at STA 25+50 to the ARV at STA 66+30	24	104
13	From the SWTP to the ARV at STA 66+30	24	116

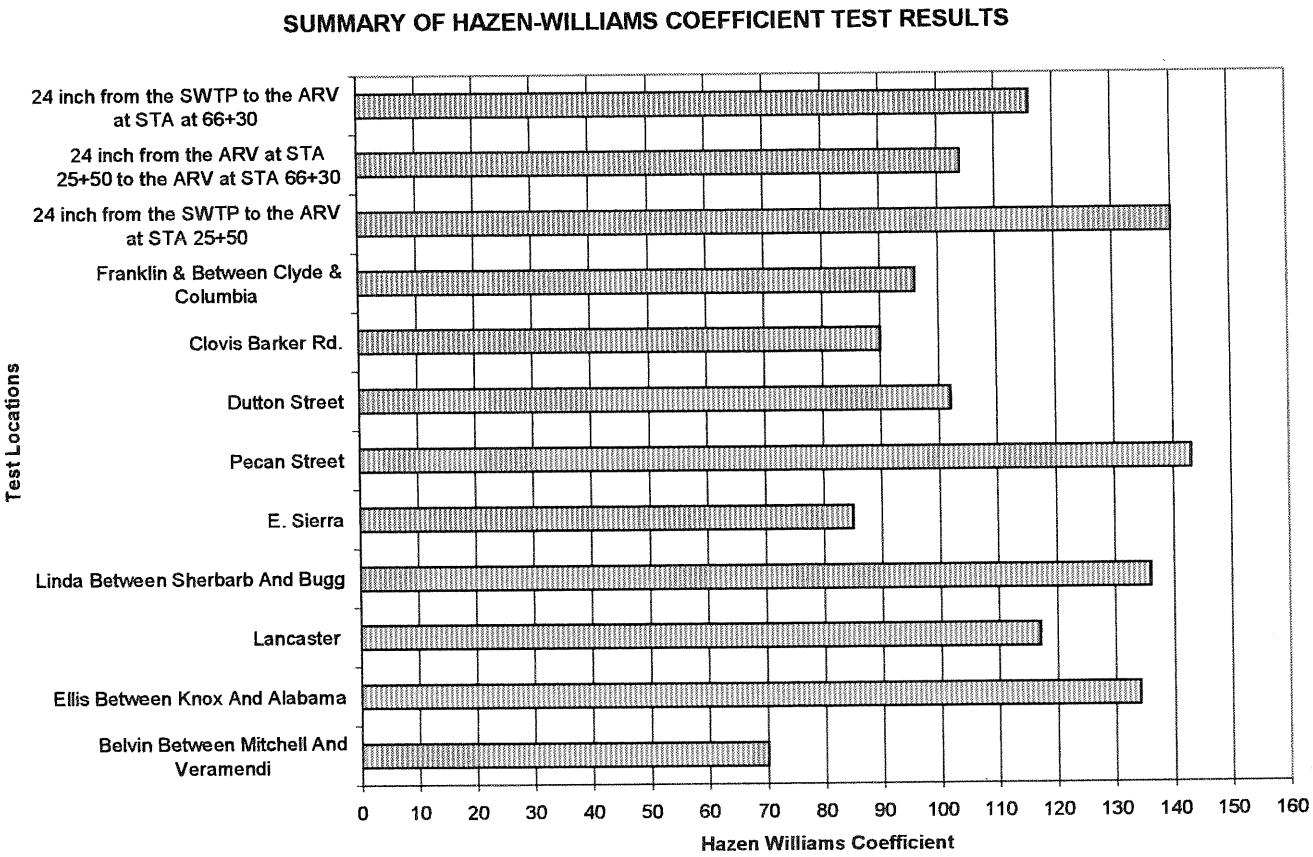

ANALYSIS OF RESULTS

The results show that the Hazen-Williams coefficient varies from a low of 70 to a high of 143. The 70 coefficient is on a 6-inch main in an older section of the distribution system. The 24-inch main was tested in two sections. The first section had a "C" value of 140 while the second section had a "C" value of 104. The "C" value for the combined sections was 116. It is possible the elevation common to both sections may be incorrect. It is recommended the value of 116 be used for the Hazen-Williams coefficient of the 24-inch main.

During the course of testing the mains described above, valves were operated to isolate the section of main to be tested. A small number of valves had defects. The following table lists the valves operated and the defects, if any, noted.

TABLE NO. 2-2

VALVES OPERATED

Number	Date Operated 2002	Location	Size - inch	Number of Turns	Comments
1	7/17	Dutton W-N-Wonder World	10		
2	7/18	Lancaster-W-Bishop	8		Found closed/opened 7/18/02
3	7/18	Lancaster-N-Ramona	8		
4	7/18	Pecan-N-Uhland	6		
5	7/18	Crepe Myrtle-E-IH35	8		
6	7/18	E. Sierra-S-Camaro	8		
7	7/26	SR 21-S-Railroad Tracks (24-in.)	8	26.5	
8	7/30	Franklin-N-Dartmouth	12	38.5	
9	7/30	Dartmouth-E-Clyde	6	21	
10	7/30	Clyde-N-Dartmouth	8	26.5	
11	7/30	Columbia-W-Clyde	8	27.5	
12	7/30	Clyde-N-Columbia	8	26	
13	7/30	Belvin-N-Mitchell	6	EXCEEDS 30 TURNS	Valve box full of dirt/cleaned out/valve stem broken
14	7/30	Johnson-W-Hopkins	6	8	Valve box full of dirt/cleaned out/valve stem broken
15	7/31	Reyes-W-Hines	6	20	
16	7/31	Knox-N-Knox	6	19.5	
17	7/31	Ellis-N-Knox	6	21.5	
18	7/31	Hayes-S-Parker	6	19	
19	7/31	Ebony-E-Patricia	6	20.5	Valve not shown on map
20	7/31	Oakdale-E-Patricia	6	22	
21	7/31	Candlelight-E-Patricia	8	26	
22	7/31	NB IH35-S-Woodcrest	8	24	
23	7/31	Woodcrest-E-NB IH35	6	20	Valve not shown on map
24	7/31	Ebony-E-NB IH35	6		Found closed/left closed; due to location not sure valve is on 6-in. main in Ebony or on 8-in. main in northbound IH35
25		NB IH35-N-Woodcrest	8		Unable to locate
26		Woodcrest-W-NB IH35	8		Unable to locate

In addition to noting valve defects, mapping errors were also recorded.

TABLE NO. 2-3

MAP ERRORS

6-in. main in Linda deadends just south of Bugg - does not connect to the 12-inch main in Bugg as shown

Hydrant not shown on Parker between Patricia and Hays

Hydrant not shown on the corner of Ebony and Patricia

Hydrant shown at the intersection of Belvin and Quarry does not exist

Hydrant not shown at the intersection of Belvin and Veramendi

8-in. valve in Ebony east of Patricia not shown on map

6-in. valve in Woodcrest east of northbound (NB) IH35 not shown on map

TASK NO. 3 - STATIC CALIBRATION

Beginning on July 22nd, 20 electronic pressure dataloggers were installed on hydrants throughout the San Marcos water distribution system. The locations of these hydrants are shown in the following table. After the pressure dataloggers were installed, individual hydrants were opened and the discharge flow from each of these hydrants was measured for a period of approximately 20 minutes. After ten hydrants were opened, the data from the 20 pressure dataloggers were downloaded onto a computer and the dataloggers were removed. The results of the flow measurements are shown in Table No. 3-2.

TABLE NO. 3-1

PRESSURE DATALOGGER LOCATIONS

Location Number	Hydrant Year	Location	Pressure Reading At Set Up - psi	Set Up Date 2002	Time of Pressure Reading	Radcom Pressure Datalogger ID No.	Distance From Top Hydrant Flange to Radcom Pressure Datalogger - inch
1	1987	1011 Highway 80	86	7/22	14:00	7556	15
2	1995	755 River Rd.	87	7/22	13:44	7555	21
3	1997	Aquarena Springs and Uhland	72	7/22	14:22	6792	22
4	1986	Carlson Cir.	90	7/22	14:55	7557	18
5	2000	Champions Blvd. and Post Rd.	72	7/22	14:42	7285	19
5A	2000	Champions Blvd. and Post Rd.	69	7/25	13:14	7484	19
6	2000	Cheatham and McGhehee	89	7/22	8:28	7490	22
7	1989	Chestnut and Walnut	92	7/22	9:23	7488	32
8	1998	Coffee and Posey	94	7/22	11:50	7484	18
9	1984	Comanche and Linsey	55	7/22	8:55	6161	26
10	1988	Craddock and Ranch Road 12	82	7/22	9:45	7157	29
11	2000	Dixon and Belvin	75	7/22	10:06	7550	25
12	1969	Girard and Earle	86	7/22	9:56	7552	27
13	1996	Hopkins and Bobcat	84	7/22	15:21	7158	28
14	1985	Lago Vista and Crystal River Pkwy.	47	7/22	13:03	7553	22
15	1985	Lockwood and Magnolia	79	7/22	12:47	7156	24
16	1951	M. L. King and Mitchell	76	7/22	8:40	7282	22
17	1997	Southbound I-35 access road across from northbound 2910 Access Road	94	7/22	10:19	7492	20
18	1988	Schule and Camaro Way	73	7/22	9:33	7288	27
19	1999	Stagecoach and Summit Ridge	54	7/22	11:23	7549	15
19A	1999	Stagecoach and Summit Ridge	54	7/31	16:06	7488	15
20	1984	West and Uhland	33	7/22	15:07	7565	18

TABLE NO. 3-2

SUMMARY OF FLOW HYDRANT RESULTS

Location	Hydrant Year	Date Of Test 2002	Time Of Test	Calculated Flow - gpm
Haynes and McKinnon	1948	7/23	8:58	1,300
North and Linsey	1994	7/23	9:55	600
231 Lamar St.	1953	7/23	11:00	900
Fenway and Craddock	1980	7/23	12:10	1,600
Lancaster and Spring Hollow (next to 2106 Lancaster)	1985	7/23	14:44	1,800
Columbia and Marlton	1980	7/23	15:32	1,900
2101 Clovis Barker	1999	7/24	9:20	1,000
Stagecoach and Wonder World	1999	7/24	10:05	1,500
Next to 2210 Summit Ridge	1997	7/24	10:43	1,600
Next to 2210 Summit Ridge	1997	7/31	16:23	1,600
Champions and Yarrington	2000	7/24	12:53	900
Champions and Yarrington	2000	7/25	13:30	1,400

A more detailed listing of the results at each flow hydrant may be found in the Appendix. Following the list are the detailed pressure readings at the 20 locations. The location is shown in the table heading along with the datalogger identification number

APPENDIX

DETAILED FLOW HYDRANT RESULTS

Test Number	Location	Hydrant Year	Set Up Date	Time Of Test	Number Of Ports Open	Diameter Of Ports inch	Average Radcom Pressure Datalogger Correction psi	Average Radcom Pressure Datalogger Readings psi	Corrected Reading psi	Calculated Flow gpm	Total Time Flowed minutes	Total Gallons Flowed
1	Haynes and McKinnon	1948	7/23	8:58	2	2.5	0.41	13.17	12.76	1,300	20	26,000
2	North and Linsey	1994	7/23	9:55	2	2.5	0.30	2.51	2.21	600	20	12,000
3	231 Lamar St.	1953	7/23	11:00	2	2.5	0.24	6.20	5.96	900	20	18,000
4	Fenway and Craddock	1980	7/23	12:10	2	2.5	0.16	18.61	18.45	1,600	20	32,000
5	Lancaster and Spring Hollow (next to 2106 Lancaster)	1985	7/23	14:44	2	2.5	-0.25	22.67	22.92	1,800	20	36,000
6	Columbia and Marlton	1980	7/23	15:32	2	2.5	0.06	26.61	26.55	1,900	16.25	30,875
7	2101 Clovis Barker	1999	7/24	9:20	2	2.5	0.23	7.62	7.39	1,000	20	20,000
8	Stagecoach and Wonder World	1999	7/24	10:05	2	2.5	0.32	16.03	15.70	1,500	15	22,500
9	Next to 2210 Summit Ridge	1997	7/24	10:43	2	2.5	0.21	17.95	17.75	1,600	17.5	28,000
9A	Next to 2210 Summit Ridge	1997	7/31	16:23	2	2.5	0.43	18.68	18.24	1,600	13	20,800
10	Champions and Yarrington	2000	7/24	12:53	1	2.5	-0.14	24.28	24.42	900	20	18,000
10A	Champions and Yarrington	2000	7/25	13:30	2	2.5	0.07	14.39	14.31	1,400	20	28,000
Total												292,175

1101 Highway 80 - No. 7556

Date	Time	Pres (PSI)
07/22/02	13:34:06	-0.142
07/22/02	13:35:06	-0.085
07/22/02	13:36:06	-0.142
07/22/02	13:37:06	-0.142
07/22/02	13:38:06	-0.142
07/22/02	13:39:06	-0.142
07/22/02	13:40:06	-0.142
07/22/02	13:41:06	-0.142
07/22/02	13:42:06	-0.171
07/22/02	13:43:06	-0.142
07/22/02	13:44:06	-0.142
07/22/02	13:45:06	-0.142
07/22/02	13:46:06	-0.142
07/22/02	13:47:06	-0.171
07/22/02	13:48:06	-0.142
07/22/02	13:49:06	-0.171
07/22/02	13:50:06	-0.142
07/22/02	13:51:06	-0.142
07/22/02	13:52:06	-0.171
07/22/02	13:53:06	-0.085
07/22/02	13:54:06	-0.085
07/22/02	13:55:06	-0.085
07/22/02	13:56:06	-0.085
07/22/02	13:57:06	-0.085
07/22/02	13:58:06	-0.142
07/22/02	13:59:06	39.416
07/22/02	14:00:06	85.800
07/22/02	14:01:06	85.259
07/22/02	14:02:06	83.212
07/22/02	14:03:06	84.662
07/22/02	14:04:06	85.203
07/22/02	14:05:06	66.291
07/22/02	14:06:06	69.902
07/22/02	14:07:06	74.111
07/22/02	14:08:06	74.908
07/22/02	14:09:06	74.026
07/22/02	14:10:06	73.486
07/22/02	14:11:06	83.752
07/22/02	14:12:06	83.837
07/22/02	14:13:06	83.525
07/22/02	14:14:06	82.700
07/22/02	14:15:06	83.525
07/22/02	14:16:06	85.117
07/22/02	14:17:06	82.444
07/22/02	14:18:06	82.586
07/22/02	14:19:06	82.017
07/22/02	14:20:06	82.387
07/22/02	14:21:06	84.662
07/22/02	14:22:06	81.477
07/22/02	14:23:06	81.278
07/22/02	14:24:06	83.752
07/22/02	14:25:06	80.851
07/22/02	14:26:06	81.875
07/22/02	14:27:06	82.387
07/22/02	14:28:06	83.951
07/22/02	14:29:06	84.378
07/22/02	14:30:06	83.894
07/22/02	14:31:06	84.918
07/22/02	14:32:06	83.894
07/22/02	14:33:06	79.060
07/22/02	14:34:06	79.828
07/22/02	14:35:06	81.278
07/22/02	14:36:06	80.851
07/22/02	14:37:06	80.652
07/22/02	14:38:06	79.401
07/22/02	14:39:06	80.510
07/22/02	14:40:06	81.477
07/22/02	14:41:06	80.709
07/22/02	14:42:06	80.368
07/22/02	14:43:06	80.368
07/22/02	14:44:06	80.425
07/22/02	14:45:06	80.425
07/22/02	14:46:06	79.828
07/22/02	14:47:06	81.193
07/22/02	14:48:06	79.685
07/22/02	14:49:06	80.766
07/22/02	14:50:06	80.453
07/22/02	14:51:06	79.259
07/22/02	14:52:06	80.169
07/22/02	14:53:06	80.994
07/22/02	14:54:06	80.595
07/22/02	14:55:06	81.079
07/22/02	14:56:06	80.652
07/22/02	14:57:06	80.908
07/22/02	14:58:06	80.709
07/22/02	14:59:06	80.908
07/22/02	15:00:06	80.510
07/22/02	15:01:06	81.335
07/22/02	15:02:06	81.477
07/22/02	15:03:06	78.519
07/22/02	15:04:06	79.970
07/22/02	15:05:06	85.402
07/22/02	15:06:06	80.709
07/22/02	15:07:06	80.425
07/22/02	15:08:06	81.477
07/22/02	15:09:06	82.444
07/22/02	15:10:06	82.558
07/22/02	15:11:06	81.534
07/22/02	15:12:06	83.183
07/22/02	15:13:06	81.676
07/22/02	15:14:06	81.278
07/22/02	15:15:06	79.486
07/22/02	15:16:06	81.392
07/22/02	15:17:06	81.818
07/22/02	15:18:06	80.112
07/22/02	15:19:06	82.842
07/22/02	15:20:06	81.079
07/22/02	15:21:06	83.269
07/22/02	15:22:06	81.961
07/22/02	15:23:06	81.193
07/22/02	15:24:06	82.984
07/22/02	15:25:06	80.084
07/22/02	15:26:06	82.103
07/22/02	15:27:06	79.828
07/22/02	15:28:06	82.387
07/22/02	15:29:06	81.278
07/22/02	15:30:06	81.733
07/22/02	15:31:06	81.477
07/22/02	15:32:06	81.136
07/22/02	15:33:06	81.619
07/22/02	15:34:06	82.501
07/22/02	15:35:06	81.050
07/22/02	15:36:06	83.468
07/22/02	15:37:06	82.643
07/22/02	15:38:06	83.269
07/22/02	15:39:06	84.037
07/22/02	15:40:06	82.359
07/22/02	15:41:06	83.809
07/22/02	15:42:06	83.126
07/22/02	15:43:06	82.387
07/22/02	15:44:06	83.752
07/22/02	15:45:06	82.984
07/22/02	15:46:06	87.279
07/22/02	15:47:06	86.369
07/22/02	15:48:06	85.544
07/22/02	15:49:06	87.620
07/22/02	15:50:06	88.245
07/22/02	15:51:06	88.217
07/22/02	15:52:06	89.326
07/22/02	15:53:06	86.425
07/22/02	15:54:06	86.113
07/22/02	15:55:06	86.027
07/22/02	15:56:06	85.686
07/22/02	15:57:06	86.653
07/22/02	15:58:06	84.321
07/22/02	15:59:06	86.511
07/22/02	16:00:06	83.667
07/22/02	16:01:06	85.203
07/22/02	16:02:06	84.975
07/22/02	16:03:06	85.146
07/22/02	16:04:06	85.316
07/22/02	16:05:06	82.074
07/22/02	16:06:06	83.951
07/22/02	16:07:06	82.160
07/22/02	16:08:06	86.795
07/22/02	16:09:06	84.292
07/22/02	16:10:06	84.093
07/22/02	16:11:06	85.828
07/22/02	16:12:06	83.837
07/22/02	16:13:06	83.411
07/22/02	16:14:06	84.492
07/22/02	16:15:06	81.619
07/22/02	16:16:06	83.126
07/22/02	16:17:06	82.359
07/22/02	16:18:06	82.984
07/22/02	16:19:06	82.558
07/22/02	16:20:06	85.800
07/22/02	16:21:06	83.894
07/22/02	16:22:06	84.321
07/22/02	16:23:06	82.842
07/22/02	16:24:06	81.961
07/22/02	16:25:06	85.203
07/22/02	16:26:06	85.458
07/22/02	16:27:06	81.904
07/22/02	16:28:06	84.719
07/22/02	16:29:06	83.269
07/22/02	16:30:06	83.894
07/22/02	16:31:06	83.695
07/22/02	16:32:06	84.150
07/22/02	16:33:06	83.070
07/22/02	16:34:06	85.060
07/22/02	16:35:06	82.216
07/22/02	16:36:06	85.146
07/22/02	16:37:06	83.951
07/22/02	16:38:06	83.326
07/22/02	16:39:06	84.520
07/22/02	16:40:06	84.093
07/22/02	16:41:06	84.150
07/22/02	16:42:06	86.283
07/22/02	16:43:06	83.411
07/22/02	16:44:06	83.667
07/22/02	16:45:06	84.378
07/22/02	16:46:06	85.885
07/22/02	16:47:06	85.146
07/22/02	16:48:06	84.662
07/22/02	16:49:06	83.894
07/22/02	16:50:06	86.454
07/22/02	16:51:06	84.776
07/22/02	16:52:06	84.008
07/22/02	16:53:06	85.629
07/22/02	16:54:06	82.700
07/22/02	16:55:06	83.041
07/22/02	16:56:06	86.113
07/22/02	16:57:06	83.468
07/22/02	16:58:06	82.586
07/22/02	16:59:06	82.074
07/22/02	17:00:06	81.392
07/22/02	17:01:06	82.728
07/22/02	17:02:06	83.553
07/22/02	17:03:06	81.193
07/22/02	17:04:06	82.501
07/22/02	17:05:06	83.212
07/22/02	17:06:06	82.927
07/22/02	17:07:06	83.610
07/22/02	17:08:06	82.984
07/22/02	17:09:06	82.927
07/22/02	17:10:06	83.610
07/22/02	17:11:06	84.577
07/22/02	17:12:06	84.975
07/22/02	17:13:06	83.411
07/22/02	17:14:06	80.027
07/22/02	17:15:06	84.492
07/22/02	17:16:06	81.904
07/22/02	17:17:06	83.041
07/22/02	17:18:06	83.126
07/22/02	17:19:06	85.885
07/22/02	17:20:06	84.037
07/22/02	17:21:06	82.387
07/22/02	17:22:06	83.041
07/22/02	17:23:06	85.203
07/22/02	17:24:06	85.828
07/22/02	17:25:06	83.610
07/22/02	17:26:06	84.776
07/22/02	17:27:06	84.975
07/22/02	17:28:06	84.861
07/22/02	17:29:06	85.458
07/22/02	17:30:06	85.686
07/22/02	17:31:06	84.520
07/22/02	17:32:06	83.525
07/22/02	17:33:06	84.776
07/22/02	17:34:06	85.544
07/22/02	17:35:06	83.809
07/22/02	17:36:06	83.610
07/22/02	17:37:06	83.809
07/22/02	17:38:06	84.150
07/22/02	17:39:06	83.809
07/22/02	17:40:06	82.700
07/22/02	17:41:06	84.776
07/22/02	17:42:06	83.468
07/22/02	17:43:06	84.236
07/22/02	17:44:06	84.321
07/22/02	17:45:06	82.700
07/22/02	17:46:06	83.041
07/22/02	17:47:06	84.378
07/22/02	17:48:06	84.833
07/22/02	17:49:06	81.875
07/22/02	17:50:06	85.402
07/22/02	17:51:06	85.060
07/22/02	17:52:06	84.093
07/22/02	17:53:06	86.169
07/22/02	17:54:06	82.842
07/22/02	17:55:06	83.752
07/22/02	17:56:06	83.553
07/22/02	17:57:06	81.904

1101 Highway 80 - No. 7556 cont.

Date	Time	Pres (PSI)
07/22/02	17:58:06	83.894
07/22/02	17:59:06	82.302
07/22/02	18:00:06	83.212
07/22/02	18:01:06	81.676
07/22/02	18:02:06	81.875
07/22/02	18:03:06	81.562
07/22/02	18:04:06	82.984
07/22/02	18:05:06	80.112
07/22/02	18:06:06	82.359
07/22/02	18:07:06	83.411
07/22/02	18:08:06	83.183
07/22/02	18:09:06	83.354
07/22/02	18:10:06	82.842
07/22/02	18:11:06	84.037
07/22/02	18:12:06	82.359
07/22/02	18:13:06	81.136
07/22/02	18:14:06	82.728
07/22/02	18:15:06	82.984
07/22/02	18:16:06	84.292
07/22/02	18:17:06	85.146
07/22/02	18:18:06	82.871
07/22/02	18:19:06	81.619
07/22/02	18:20:06	83.326
07/22/02	18:21:06	82.700
07/22/02	18:22:06	82.700
07/22/02	18:23:06	84.292
07/22/02	18:24:06	84.918
07/22/02	18:25:06	84.776
07/22/02	18:26:06	82.103
07/22/02	18:27:06	81.818
07/22/02	18:28:06	83.041
07/22/02	18:29:06	84.918
07/22/02	18:30:06	83.525
07/22/02	18:31:06	83.126
07/22/02	18:32:06	83.269
07/22/02	18:33:06	85.146
07/22/02	18:34:06	81.335
07/22/02	18:35:06	83.951
07/22/02	18:36:06	62.850
07/22/02	18:37:06	68.026
07/22/02	18:38:06	70.642
07/22/02	18:39:06	70.357
07/22/02	18:40:06	68.594
07/22/02	18:41:06	69.561
07/22/02	18:42:06	80.510
07/22/02	18:43:06	83.837
07/22/02	18:44:06	81.420
07/22/02	18:45:06	84.776
07/22/02	18:46:06	83.070
07/22/02	18:47:06	82.927
07/22/02	18:48:06	81.761
07/22/02	18:49:06	81.079
07/22/02	18:50:06	81.079
07/22/02	18:51:06	80.084
07/22/02	18:52:06	79.884
07/22/02	18:53:06	81.534
07/22/02	18:54:06	80.795
07/22/02	18:55:06	79.543
07/22/02	18:56:06	80.595
07/22/02	18:57:06	80.652
07/22/02	18:58:06	79.884
07/22/02	18:59:06	81.477
07/22/02	19:00:06	77.268
07/22/02	19:01:06	80.795
07/22/02	19:02:06	78.974
07/22/02	19:03:06	80.937
07/22/02	19:04:06	77.837
07/22/02	19:05:06	79.003
07/22/02	19:06:06	79.060
07/22/02	19:07:06	78.718
07/22/02	19:08:06	79.828
07/22/02	19:09:06	80.994
07/22/02	19:10:06	78.974
07/22/02	19:11:06	81.136
07/22/02	19:12:06	85.686
07/22/02	19:13:06	81.278
07/22/02	19:14:06	83.326
07/22/02	19:15:06	83.326
07/22/02	19:16:06	83.212
07/22/02	19:17:06	83.411
07/22/02	19:18:06	83.411
07/22/02	19:19:06	82.927
07/22/02	19:20:06	82.501
07/22/02	19:21:06	81.250
07/22/02	19:22:06	84.093
07/22/02	19:23:06	81.818
07/22/02	19:24:06	82.444
07/22/02	19:25:06	82.160
07/22/02	19:26:06	81.676
07/22/02	19:27:06	84.037
07/22/02	19:28:06	82.501
07/22/02	19:29:06	82.558
07/22/02	19:30:06	82.245
07/22/02	19:31:06	83.809
07/22/02	19:32:06	82.586
07/22/02	19:33:06	82.700
07/22/02	19:34:06	81.477
07/22/02	19:35:06	82.160
07/22/02	19:36:06	82.017
07/22/02	19:37:06	81.477
07/22/02	19:38:06	82.017
07/22/02	19:39:06	83.695
07/22/02	19:40:06	82.444
07/22/02	19:41:06	81.961
07/22/02	19:42:06	83.809
07/22/02	19:43:06	80.368
07/22/02	19:44:06	82.984
07/22/02	19:45:06	82.984
07/22/02	19:46:06	83.183
07/22/02	19:47:06	82.501
07/22/02	19:48:06	84.634
07/22/02	19:49:06	81.875
07/22/02	19:50:06	82.643
07/22/02	19:51:06	84.435
07/22/02	19:52:06	83.610
07/22/02	19:53:06	81.562
07/22/02	19:54:06	80.908
07/22/02	19:55:06	83.326
07/22/02	19:56:06	82.359
07/22/02	19:57:06	83.183
07/22/02	19:58:06	81.875
07/22/02	19:59:06	83.269
07/22/02	20:00:06	82.302
07/22/02	20:01:06	83.183
07/22/02	20:02:06	82.103
07/22/02	20:03:06	84.037
07/22/02	20:04:06	82.728
07/22/02	20:05:06	82.302
07/22/02	20:06:06	82.501
07/22/02	20:07:06	82.871
07/22/02	20:08:06	82.871
07/22/02	20:09:06	80.908
07/22/02	20:10:06	81.875
07/22/02	20:11:06	83.695
07/22/02	20:12:06	81.079
07/22/02	20:13:06	83.411
07/22/02	20:14:06	81.904
07/22/02	20:15:06	81.193
07/22/02	20:16:06	80.937
07/22/02	20:17:06	82.444
07/22/02	20:18:06	81.676
07/22/02	20:19:06	82.700
07/22/02	20:20:06	84.008
07/22/02	20:21:06	83.553
07/22/02	20:22:06	82.387
07/22/02	20:23:06	82.444
07/22/02	20:24:06	82.359
07/22/02	20:25:06	82.160
07/22/02	20:26:06	82.785
07/22/02	20:27:06	82.074
07/22/02	20:28:06	81.534
07/22/02	20:29:06	82.558
07/22/02	20:30:06	83.326
07/22/02	20:31:06	82.643
07/22/02	20:32:06	81.676
07/22/02	20:33:06	81.904
07/22/02	20:34:06	80.851
07/22/02	20:35:06	83.212
07/22/02	20:36:06	82.871
07/22/02	20:37:06	83.752
07/22/02	20:38:06	82.359
07/22/02	20:39:06	82.871
07/22/02	20:40:06	82.558
07/22/02	20:41:06	82.558
07/22/02	20:42:06	82.359
07/22/02	20:43:06	83.468
07/22/02	20:44:06	82.387
07/22/02	20:45:06	82.700
07/22/02	20:46:06	81.534
07/22/02	20:47:06	81.193
07/22/02	20:48:06	83.610
07/22/02	20:49:06	82.842
07/22/02	20:50:06	82.643
07/22/02	20:51:06	84.008
07/22/02	20:52:06	83.553
07/22/02	20:53:06	83.695
07/22/02	20:54:06	81.875
07/22/02	20:55:06	84.719
07/22/02	20:56:06	82.927
07/22/02	20:57:06	82.927
07/22/02	20:58:06	83.212
07/22/02	20:59:06	83.126
07/22/02	21:00:06	84.719
07/22/02	21:01:06	83.894
07/22/02	21:02:06	81.904
07/22/02	21:03:06	81.420
07/22/02	21:04:06	81.733
07/22/02	21:05:06	80.795
07/22/02	21:06:06	84.093
07/22/02	21:07:06	83.411
07/22/02	21:08:06	83.070
07/22/02	21:09:06	83.667
07/22/02	21:10:06	83.183
07/22/02	21:11:06	84.037
07/22/02	21:12:06	81.278
07/22/02	21:13:06	82.160
07/22/02	21:14:06	83.326
07/22/02	21:15:06	83.041
07/22/02	21:16:06	83.667
07/22/02	21:17:06	82.501
07/22/02	21:18:06	83.269
07/22/02	21:19:06	83.183
07/22/02	21:20:06	82.984
07/22/02	21:21:06	82.785
07/22/02	21:22:06	84.321
07/22/02	21:23:06	82.728
07/22/02	21:24:06	82.984
07/22/02	21:25:06	83.468
07/22/02	21:26:06	85.003
07/22/02	21:27:06	84.093
07/22/02	21:28:06	82.984
07/22/02	21:29:06	82.586
07/22/02	21:30:06	82.984
07/22/02	21:31:06	84.236
07/22/02	21:32:06	82.160
07/22/02	21:33:06	82.871
07/22/02	21:34:06	83.809
07/22/02	21:35:06	82.501
07/22/02	21:36:06	83.525
07/22/02	21:37:06	83.070
07/22/02	21:38:06	81.619
07/22/02	21:39:06	82.842
07/22/02	21:40:06	82.785
07/22/02	21:41:06	82.927
07/22/02	21:42:06	84.861
07/22/02	21:43:06	83.667
07/22/02	21:44:06	85.003
07/22/02	21:45:06	84.236
07/22/02	21:46:06	84.093
07/22/02	21:47:06	82.302
07/22/02	21:48:06	83.126
07/22/02	21:49:06	83.894
07/22/02	21:50:06	85.544
07/22/02	21:51:06	84.776
07/22/02	21:52:06	84.861
07/22/02	21:53:06	85.458
07/22/02	21:54:06	86.169
07/22/02	21:55:06	85.970
07/22/02	21:56:06	85.458
07/22/02	21:57:06	85.316
07/22/02	21:58:06	86.653
07/22/02	21:59:06	86.084
07/22/02	22:00:06	86.169
07/22/02	22:01:06	84.520
07/22/02	22:02:06	82.103
07/22/02	22:03:06	84.292
07/22/02	22:04:06	83.951
07/22/02	22:05:06	85.601
07/22/02	22:06:06	75.619
07/22/02	22:07:06	66.149
07/22/02	22:08:06	68.765
07/22/02	22:09:06	80.937
07/22/02	22:10:06	84.378
07/22/02	22:11:06	80.937
07/22/02	22:12:06	82.586
07/22/02	22:13:06	82.160
07/22/02	22:14:06	82.103
07/22/02	22:15:06	81.477
07/22/02	22:16:06	81.392
07/22/02	22:17:06	81.136
07/22/02	22:18:06	82.160
07/22/02	22:19:06	81.733
07/22/02	22:20:06	85.117
07/22/02	22:21:06	82.871

1101 Highway 80 - No. 7556 cont.

Date	Time	Pres (PSI)
07/22/02	22:22:06	83.610
07/22/02	22:23:06	83.667
07/22/02	22:24:06	83.326
07/22/02	22:25:06	84.918
07/22/02	22:26:06	83.752
07/22/02	22:27:06	85.487
07/22/02	22:28:06	85.203
07/22/02	22:29:06	85.259
07/22/02	22:30:06	85.117
07/22/02	22:31:06	84.150
07/22/02	22:32:06	84.662
07/22/02	22:33:06	83.809
07/22/02	22:34:06	84.719
07/22/02	22:35:06	86.909
07/22/02	22:36:06	86.169
07/22/02	22:37:06	85.686
07/22/02	22:38:06	86.653
07/22/02	22:39:06	86.568
07/22/02	22:40:06	85.146
07/22/02	22:41:06	86.710
07/22/02	22:42:06	86.596
07/22/02	22:43:06	86.767
07/22/02	22:44:06	86.369
07/22/02	22:45:06	86.795
07/22/02	22:46:06	84.179
07/22/02	22:47:06	86.425
07/22/02	22:48:06	86.795
07/22/02	22:49:06	86.511
07/22/02	22:50:06	87.762
07/22/02	22:51:06	86.795
07/22/02	22:52:06	86.568
07/22/02	22:53:06	87.250
07/22/02	22:54:06	76.159
07/22/02	22:55:06	70.301
07/22/02	22:56:06	73.799
07/22/02	22:57:06	74.709
07/22/02	22:58:06	73.941
07/22/02	22:59:06	74.026
07/22/02	23:00:06	81.619
07/22/02	23:01:06	85.458
07/22/02	23:02:06	83.269
07/22/02	23:03:06	82.700
07/22/02	23:04:06	82.387
07/22/02	23:05:06	82.842
07/22/02	23:06:06	82.927
07/22/02	23:07:06	82.785
07/22/02	23:08:06	82.074
07/22/02	23:09:06	82.216
07/22/02	23:10:06	82.245
07/22/02	23:11:06	82.017
07/22/02	23:12:06	82.984
07/22/02	23:13:06	82.984
07/22/02	23:14:06	83.411
07/22/02	23:15:06	82.160
07/22/02	23:16:06	81.904
07/22/02	23:17:06	83.695
07/22/02	23:18:06	84.634
07/22/02	23:19:06	84.435
07/22/02	23:20:06	82.984
07/22/02	23:21:06	82.586
07/22/02	23:22:06	82.927
07/22/02	23:23:06	83.212
07/22/02	23:24:06	83.411
07/22/02	23:25:06	83.468
07/22/02	23:26:06	83.809
07/22/02	23:27:06	83.411
07/22/02	23:28:06	83.212
07/22/02	23:29:06	83.752
07/22/02	23:30:06	83.837
07/22/02	23:31:06	83.667
07/22/02	23:32:06	83.894
07/22/02	23:33:06	82.927
07/22/02	23:34:06	84.435
07/22/02	23:35:06	83.326
07/22/02	23:36:06	83.212
07/22/02	23:37:06	90.151
07/22/02	23:38:06	81.278
07/22/02	23:39:06	86.852
07/22/02	23:40:06	87.250
07/22/02	23:41:06	85.970
07/22/02	23:42:06	86.568
07/22/02	23:43:06	86.653
07/22/02	23:44:06	85.686
07/22/02	23:45:06	85.629
07/22/02	23:46:06	87.392
07/22/02	23:47:06	87.079
07/22/02	23:48:06	87.136
07/22/02	23:49:06	86.454
07/22/02	23:50:06	86.226
07/22/02	23:51:06	86.852
07/22/02	23:52:06	87.535
07/22/02	23:53:06	87.079
07/22/02	23:54:06	86.994
07/22/02	23:55:06	87.079
07/22/02	23:56:06	86.369
07/22/02	23:57:06	86.113
07/22/02	23:58:06	87.734
07/22/02	23:59:06	87.819
07/23/02	00:00:06	87.279
07/23/02	00:01:06	87.051
07/23/02	00:02:06	85.885
07/23/02	00:03:06	88.075
07/23/02	00:04:06	87.079
07/23/02	00:05:06	87.620
07/23/02	00:06:06	87.904
07/23/02	00:07:06	86.994
07/23/02	00:08:06	87.193
07/23/02	00:09:06	86.568
07/23/02	00:10:06	87.136
07/23/02	00:11:06	86.596
07/23/02	00:12:06	91.544
07/23/02	00:13:06	89.696
07/23/02	00:14:06	88.701
07/23/02	00:15:06	90.577
07/23/02	00:16:06	89.838
07/23/02	00:17:06	89.952
07/23/02	00:18:06	90.151
07/23/02	00:19:06	89.895
07/23/02	00:20:06	89.212
07/23/02	00:21:06	88.985
07/23/02	00:22:06	90.236
07/23/02	00:23:06	90.322
07/23/02	00:24:06	88.843
07/23/02	00:25:06	89.326
07/23/02	00:26:06	90.492
07/23/02	00:27:06	89.411
07/23/02	00:28:06	89.753
07/23/02	00:29:06	90.236
07/23/02	00:30:06	89.411
07/23/02	00:31:06	90.009
07/23/02	00:32:06	90.919
07/23/02	00:33:06	88.928
07/23/02	00:34:06	89.895
07/23/02	00:35:06	89.952
07/23/02	00:36:06	89.838
07/23/02	00:37:06	90.094
07/23/02	00:38:06	90.293
07/23/02	00:39:06	88.843
07/23/02	00:40:06	91.260
07/23/02	00:41:06	90.293
07/23/02	00:42:06	89.611
07/23/02	00:43:06	90.919
07/23/02	00:44:06	89.042
07/23/02	00:45:06	89.554
07/23/02	00:46:06	91.004
07/23/02	00:47:06	89.895
07/23/02	00:48:06	90.492
07/23/02	00:49:06	90.492
07/23/02	00:50:06	90.179
07/23/02	00:51:06	90.577
07/23/02	00:52:06	89.952
07/23/02	00:53:06	90.492
07/23/02	00:54:06	89.554
07/23/02	00:55:06	90.521
07/23/02	00:56:06	90.862
07/23/02	00:57:06	90.919
07/23/02	00:58:06	90.009
07/23/02	00:59:06	87.819
07/23/02	01:00:06	88.501
07/23/02	01:01:06	88.786
07/23/02	01:02:06	89.554
07/23/02	01:03:06	88.245
07/23/02	01:04:06	90.037
07/23/02	01:05:06	89.611
07/23/02	01:06:06	90.179
07/23/02	01:07:06	90.293
07/23/02	01:08:06	89.525
07/23/02	01:09:06	89.810
07/23/02	01:10:06	89.611
07/23/02	01:11:06	89.753
07/23/02	01:12:06	85.942
07/23/02	01:13:06	85.487
07/23/02	01:14:06	83.667
07/23/02	01:15:06	92.227
07/23/02	01:16:06	88.644
07/23/02	01:17:06	88.558
07/23/02	01:18:06	88.985
07/23/02	01:19:06	89.468
07/23/02	01:20:06	89.810
07/23/02	01:21:06	90.151
07/23/02	01:22:06	90.151
07/23/02	01:23:06	89.212
07/23/02	01:24:06	89.667
07/23/02	01:25:06	89.411
07/23/02	01:26:06	89.554
07/23/02	01:27:06	88.843
07/23/02	01:28:06	89.355
07/23/02	01:29:06	89.667
07/23/02	01:30:06	89.127
07/23/02	01:31:06	89.838
07/23/02	01:32:06	88.701
07/23/02	01:33:06	89.468
07/23/02	01:34:06	91.402
07/23/02	01:35:06	90.236
07/23/02	01:36:06	88.985
07/23/02	01:37:06	89.269
07/23/02	01:38:06	89.810
07/23/02	01:39:06	89.554
07/23/02	01:40:06	90.009
07/23/02	01:41:06	90.236
07/23/02	01:42:06	90.094
07/23/02	01:43:06	90.577
07/23/02	01:44:06	90.435
07/23/02	01:45:06	88.928
07/23/02	01:46:06	90.179
07/23/02	01:47:06	90.151
07/23/02	01:48:06	90.435
07/23/02	01:49:06	89.127
07/23/02	01:50:06	90.577
07/23/02	01:51:06	91.004
07/23/02	01:52:06	89.895
07/23/02	01:53:06	90.492
07/23/02	01:54:06	91.687
07/23/02	01:55:06	91.487
07/23/02	01:56:06	90.293
07/23/02	01:57:06	91.260
07/23/02	01:58:06	90.862
07/23/02	01:59:06	90.037
07/23/02	02:00:06	90.009
07/23/02	02:01:06	90.322
07/23/02	02:02:06	90.833
07/23/02	02:03:06	90.378
07/23/02	02:04:06	90.435
07/23/02	02:05:06	91.061
07/23/02	02:06:06	90.663
07/23/02	02:07:06	90.151
07/23/02	02:08:06	90.378
07/23/02	02:09:06	91.146
07/23/02	02:10:06	89.838
07/23/02	02:11:06	90.720
07/23/02	02:12:06	90.179
07/23/02	02:13:06	89.838
07/23/02	02:14:06	90.435
07/23/02	02:15:06	90.322
07/23/02	02:16:06	89.895
07/23/02	02:17:06	89.468
07/23/02	02:18:06	89.611
07/23/02	02:19:06	89.411
07/23/02	02:20:06	90.663
07/23/02	02:21:06	89.895
07/23/02	02:22:06	90.663
07/23/02	02:23:06	90.492
07/23/02	02:24:06	90.179
07/23/02	02:25:06	90.236
07/23/02	02:26:06	90.151
07/23/02	02:27:06	90.577
07/23/02	02:28:06	90.378
07/23/02	02:29:06	90.577
07/23/02	02:30:06	89.810
07/23/02	02:31:06	89.554
07/23/02	02:32:06	89.810
07/23/02	02:33:06	90.322
07/23/02	02:34:06	91.004
07/23/02	02:35:06	90.009
07/23/02	02:36:06	89.810
07/23/02	02:37:06	89.611
07/23/02	02:38:06	91.061
07/23/02	02:39:06	90.094
07/23/02	02:40:06	90.009
07/23/02	02:41:06	89.269
07/23/02	02:42:06	88.843
07/23/02	02:43:06	90.009
07/23/02	02:44:06	89.753
07/23/02	02:45:06	89.838

1101 Highway 80 - No. 7556 cont.

Date	Time	Pres (PSI)
07/23/02	02:46:06	90.094
07/23/02	02:47:06	89.838
07/23/02	02:48:06	88.701
07/23/02	02:49:06	90.833
07/23/02	02:50:06	90.179
07/23/02	02:51:06	89.042
07/23/02	02:52:06	90.833
07/23/02	02:53:06	90.179
07/23/02	02:54:06	89.042
07/23/02	02:55:06	90.179
07/23/02	02:56:06	89.696
07/23/02	02:57:06	89.611
07/23/02	02:58:06	89.667
07/23/02	02:59:06	89.411
07/23/02	03:00:06	89.696
07/23/02	03:01:06	89.810
07/23/02	03:02:06	89.895
07/23/02	03:03:06	89.070
07/23/02	03:04:06	89.696
07/23/02	03:05:06	89.127
07/23/02	03:06:06	90.151
07/23/02	03:07:06	89.525
07/23/02	03:08:06	89.611
07/23/02	03:09:06	89.411
07/23/02	03:10:06	89.611
07/23/02	03:11:06	89.952
07/23/02	03:12:06	89.468
07/23/02	03:13:06	90.293
07/23/02	03:14:06	90.179
07/23/02	03:15:06	90.777
07/23/02	03:16:06	89.895
07/23/02	03:17:06	89.895
07/23/02	03:18:06	90.009
07/23/02	03:19:06	89.952
07/23/02	03:20:06	90.037
07/23/02	03:21:06	89.212
07/23/02	03:22:06	89.895
07/23/02	03:23:06	89.468
07/23/02	03:24:06	89.525
07/23/02	03:25:06	91.203
07/23/02	03:26:06	89.696
07/23/02	03:27:06	89.184
07/23/02	03:28:06	90.037
07/23/02	03:29:06	90.833
07/23/02	03:30:06	90.777
07/23/02	03:31:06	90.236
07/23/02	03:32:06	90.833
07/23/02	03:33:06	90.833
07/23/02	03:34:06	91.061
07/23/02	03:35:06	91.630
07/23/02	03:36:06	89.696
07/23/02	03:37:06	90.577
07/23/02	03:38:06	90.663
07/23/02	03:39:06	90.521
07/23/02	03:40:06	90.521
07/23/02	03:41:06	91.118
07/23/02	03:42:06	90.094
07/23/02	03:43:06	90.862
07/23/02	03:44:06	90.037
07/23/02	03:45:06	90.009
07/23/02	03:46:06	90.435
07/23/02	03:47:06	90.322
07/23/02	03:48:06	90.777
07/23/02	03:49:06	90.521
07/23/02	03:50:06	90.236
07/23/02	03:51:06	90.777
07/23/02	03:52:06	90.720
07/23/02	03:53:06	90.577
07/23/02	03:54:06	90.435
07/23/02	03:55:06	90.663
07/23/02	03:56:06	89.810
07/23/02	03:57:06	90.492
07/23/02	03:58:06	90.009
07/23/02	03:59:06	88.388
07/23/02	04:00:06	89.411
07/23/02	04:01:06	90.777
07/23/02	04:02:06	89.810
07/23/02	04:03:06	89.212
07/23/02	04:04:06	90.435
07/23/02	04:05:06	90.151
07/23/02	04:06:06	89.810
07/23/02	04:07:06	89.696
07/23/02	04:08:06	90.151
07/23/02	04:09:06	90.435
07/23/02	04:10:06	88.985
07/23/02	04:11:06	89.326
07/23/02	04:12:06	90.663
07/23/02	04:13:06	88.786
07/23/02	04:14:06	89.895
07/23/02	04:15:06	90.833
07/23/02	04:16:06	90.236
07/23/02	04:17:06	90.236
07/23/02	04:18:06	89.952
07/23/02	04:19:06	89.895
07/23/02	04:20:06	89.838
07/23/02	04:21:06	88.843
07/23/02	04:22:06	89.952
07/23/02	04:23:06	89.810
07/23/02	04:24:06	89.810
07/23/02	04:25:06	89.952
07/23/02	04:26:06	90.009
07/23/02	04:27:06	89.525
07/23/02	04:28:06	89.696
07/23/02	04:29:06	90.720
07/23/02	04:30:06	89.070
07/23/02	04:31:06	89.525
07/23/02	04:32:06	88.928
07/23/02	04:33:06	89.895
07/23/02	04:34:06	92.426
07/23/02	04:35:06	89.411
07/23/02	04:36:06	90.037
07/23/02	04:37:06	89.468
07/23/02	04:38:06	90.009
07/23/02	04:39:06	91.004
07/23/02	04:40:06	89.667
07/23/02	04:41:06	90.378
07/23/02	04:42:06	90.634
07/23/02	04:43:06	89.696
07/23/02	04:44:06	90.293
07/23/02	04:45:06	90.322
07/23/02	04:46:06	88.018
07/23/02	04:47:06	90.179
07/23/02	04:48:06	90.037
07/23/02	04:49:06	90.435
07/23/02	04:50:06	90.322
07/23/02	04:51:06	89.611
07/23/02	04:52:06	90.777
07/23/02	04:53:06	90.037
07/23/02	04:54:06	89.127
07/23/02	04:55:06	90.634
07/23/02	04:56:06	89.838
07/23/02	04:57:06	89.525
07/23/02	04:58:06	90.151
07/23/02	04:59:06	68.566
07/23/02	05:00:06	79.970
07/23/02	05:01:06	87.535
07/23/02	05:02:06	86.994
07/23/02	05:03:06	87.051
07/23/02	05:04:06	85.743
07/23/02	05:05:06	86.312
07/23/02	05:06:06	85.259
07/23/02	05:07:06	85.828
07/23/02	05:08:06	85.544
07/23/02	05:09:06	84.179
07/23/02	05:10:06	84.093
07/23/02	05:11:06	84.492
07/23/02	05:12:06	84.634
07/23/02	05:13:06	83.752
07/23/02	05:14:06	84.150
07/23/02	05:15:06	84.662
07/23/02	05:16:06	84.634
07/23/02	05:17:06	84.435
07/23/02	05:18:06	84.435
07/23/02	05:19:06	84.833
07/23/02	05:20:06	85.003
07/23/02	05:21:06	84.492
07/23/02	05:22:06	84.435
07/23/02	05:23:06	84.292
07/23/02	05:24:06	83.667
07/23/02	05:25:06	84.776
07/23/02	05:26:06	83.951
07/23/02	05:27:06	82.927
07/23/02	05:28:06	82.160
07/23/02	05:29:06	82.728
07/23/02	05:30:06	82.984
07/23/02	05:31:06	82.216
07/23/02	05:32:06	81.961
07/23/02	05:33:06	82.842
07/23/02	05:34:06	81.761
07/23/02	05:35:06	81.477
07/23/02	05:36:06	81.961
07/23/02	05:37:06	81.250
07/23/02	05:38:06	81.079
07/23/02	05:39:06	81.193
07/23/02	05:40:06	80.510
07/23/02	05:41:06	81.250
07/23/02	05:42:06	79.202
07/23/02	05:43:06	79.685
07/23/02	05:44:06	79.458
07/23/02	05:45:06	80.112
07/23/02	05:46:06	79.344
07/23/02	05:47:06	79.458
07/23/02	05:48:06	77.837
07/23/02	05:49:06	76.074
07/23/02	05:50:06	93.478
07/23/02	05:51:06	91.118
07/23/02	05:52:06	87.136
07/23/02	05:53:06	87.904
07/23/02	05:54:06	87.279
07/23/02	05:55:06	88.729
07/23/02	05:56:06	89.753
07/23/02	05:57:06	86.369
07/23/02	05:58:06	87.335
07/23/02	05:59:06	89.070
07/23/02	06:00:06	88.217
07/23/02	06:01:06	88.217
07/23/02	06:02:06	87.478
07/23/02	06:03:06	86.994
07/23/02	06:04:06	86.852
07/23/02	06:05:06	86.283
07/23/02	06:06:06	86.852
07/23/02	06:07:06	87.079
07/23/02	06:08:06	87.734
07/23/02	06:09:06	86.994
07/23/02	06:10:06	85.942
07/23/02	06:11:06	87.734
07/23/02	06:12:06	87.392
07/23/02	06:13:06	85.003
07/23/02	06:14:06	86.937
07/23/02	06:15:06	85.203
07/23/02	06:16:06	84.435
07/23/02	06:17:06	86.994
07/23/02	06:18:06	86.937
07/23/02	06:19:06	86.710
07/23/02	06:20:06	85.487
07/23/02	06:21:06	86.113
07/23/02	06:22:06	86.454
07/23/02	06:23:06	87.136
07/23/02	06:24:06	85.800
07/23/02	06:25:06	66.234
07/23/02	06:26:06	72.377
07/23/02	06:27:06	77.069
07/23/02	06:28:06	84.662
07/23/02	06:29:06	86.084
07/23/02	06:30:06	83.951
07/23/02	06:31:06	82.558
07/23/02	06:32:06	83.894
07/23/02	06:33:06	84.236
07/23/02	06:34:06	85.885
07/23/02	06:35:06	84.292
07/23/02	06:36:06	84.776
07/23/02	06:37:06	85.259
07/23/02	06:38:06	84.179
07/23/02	06:39:06	85.885
07/23/02	06:40:06	86.226
07/23/02	06:41:06	84.150
07/23/02	06:42:06	83.525
07/23/02	06:43:06	85.003
07/23/02	06:44:06	85.060
07/23/02	06:45:06	84.150
07/23/02	06:46:06	84.378
07/23/02	06:47:06	83.809
07/23/02	06:48:06	84.918
07/23/02	06:49:06	85.259
07/23/02	06:50:06	83.126
07/23/02	06:51:06	83.326
07/23/02	06:52:06	82.785
07/23/02	06:53:06	83.553
07/23/02	06:54:06	83.752
07/23/02	06:55:06	84.520
07/23/02	06:56:06	84.150
07/23/02	06:57:06	83.468
07/23/02	06:58:06	83.894
07/23/02	06:59:06	83.326
07/23/02	07:00:06	82.728
07/23/02	07:01:06	83.951
07/23/02	07:02:06	82.842
07/23/02	07:03:06	84.008
07/23/02	07:04:06	82.501
07/23/02	07:05:06	81.534
07/23/02	07:06:06	83.553
07/23/02	07:07:06	83.553
07/23/02	07:08:06	83.183
07/23/02	07:09:06	80.709

1101 Highway 80 - No. 7556 cont.

Date	Time	Pres (PSI)
07/23/02	07:10:06	81.961
07/23/02	07:11:06	82.984
07/23/02	07:12:06	83.411
07/23/02	07:13:06	80.766
07/23/02	07:14:06	80.311
07/23/02	07:15:06	80.908
07/23/02	07:16:06	81.477
07/23/02	07:17:06	80.112
07/23/02	07:18:06	79.401
07/23/02	07:19:06	80.994
07/23/02	07:20:06	81.477
07/23/02	07:21:06	80.766
07/23/02	07:22:06	82.586
07/23/02	07:23:06	82.785
07/23/02	07:24:06	81.392
07/23/02	07:25:06	83.837
07/23/02	07:26:06	82.074
07/23/02	07:27:06	81.676
07/23/02	07:28:06	81.761
07/23/02	07:29:06	82.643
07/23/02	07:30:06	82.359
07/23/02	07:31:06	82.728
07/23/02	07:32:06	81.676
07/23/02	07:33:06	82.984
07/23/02	07:34:06	84.236
07/23/02	07:35:06	84.378
07/23/02	07:36:06	82.842
07/23/02	07:37:06	82.984
07/23/02	07:38:06	83.951
07/23/02	07:39:06	81.619
07/23/02	07:40:06	87.136
07/23/02	07:41:06	84.634
07/23/02	07:42:06	85.544
07/23/02	07:43:06	84.492
07/23/02	07:44:06	84.008
07/23/02	07:45:06	83.695
07/23/02	07:46:06	82.700
07/23/02	07:47:06	84.037
07/23/02	07:48:06	83.468
07/23/02	07:49:06	85.544
07/23/02	07:50:06	83.667
07/23/02	07:51:06	83.951
07/23/02	07:52:06	83.894
07/23/02	07:53:06	83.468
07/23/02	07:54:06	85.601
07/23/02	07:55:06	84.435
07/23/02	07:56:06	84.093
07/23/02	07:57:06	84.292
07/23/02	07:58:06	81.420
07/23/02	07:59:06	83.951
07/23/02	08:00:06	83.126
07/23/02	08:01:06	84.292
07/23/02	08:02:06	86.568
07/23/02	08:03:06	87.335
07/23/02	08:04:06	86.027
07/23/02	08:05:06	85.970
07/23/02	08:06:06	85.970
07/23/02	08:07:06	80.652
07/23/02	08:08:06	83.468
07/23/02	08:09:06	82.017
07/23/02	08:10:06	82.871
07/23/02	08:11:06	87.250
07/23/02	08:12:06	86.767
07/23/02	08:13:06	84.918
07/23/02	08:14:06	86.084
07/23/02	08:15:06	85.629
07/23/02	08:16:06	86.283
07/23/02	08:17:06	85.942
07/23/02	08:18:06	85.402
07/23/02	08:19:06	86.312
07/23/02	08:20:06	85.743
07/23/02	08:21:06	85.601
07/23/02	08:22:06	85.885
07/23/02	08:23:06	83.695
07/23/02	08:24:06	86.027
07/23/02	08:25:06	86.454
07/23/02	08:26:06	86.511
07/23/02	08:27:06	84.833
07/23/02	08:28:06	84.292
07/23/02	08:29:06	86.283
07/23/02	08:30:06	85.487
07/23/02	08:31:06	85.458
07/23/02	08:32:06	85.629
07/23/02	08:33:06	84.918
07/23/02	08:34:06	84.037
07/23/02	08:35:06	84.577
07/23/02	08:36:06	85.885
07/23/02	08:37:06	83.809
07/23/02	08:38:06	83.126
07/23/02	08:39:06	84.833
07/23/02	08:40:06	84.321
07/23/02	08:41:06	83.183
07/23/02	08:42:06	84.150
07/23/02	08:43:06	87.051
07/23/02	08:44:06	83.183
07/23/02	08:45:06	79.828
07/23/02	08:46:06	82.501
07/23/02	08:47:06	80.795
07/23/02	08:48:06	80.766
07/23/02	08:49:06	80.908
07/23/02	08:50:06	82.643
07/23/02	08:51:06	84.179
07/23/02	08:52:06	83.411
07/23/02	08:53:06	83.468
07/23/02	08:54:06	83.183
07/23/02	08:55:06	82.785
07/23/02	08:56:06	83.183
07/23/02	08:57:06	84.150
07/23/02	08:58:06	82.700
07/23/02	08:59:06	76.387
07/23/02	09:00:06	74.851
07/23/02	09:01:06	77.268
07/23/02	09:02:06	73.799
07/23/02	09:03:06	74.026
07/23/02	09:04:06	75.391
07/23/02	09:05:06	74.367
07/23/02	09:06:06	76.017
07/23/02	09:07:06	75.420
07/23/02	09:08:06	75.192
07/23/02	09:09:06	73.969
07/23/02	09:10:06	73.600
07/23/02	09:11:06	74.453
07/23/02	09:12:06	74.766
07/23/02	09:13:06	73.941
07/23/02	09:14:06	73.884
07/23/02	09:15:06	75.050
07/23/02	09:16:06	73.742
07/23/02	09:17:06	74.566
07/23/02	09:18:06	73.144
07/23/02	09:19:06	73.685
07/23/02	09:20:06	73.799
07/23/02	09:21:06	74.083
07/23/02	09:22:06	74.282
07/23/02	09:23:06	75.277
07/23/02	09:24:06	76.102
07/23/02	09:25:06	79.685
07/23/02	09:26:06	85.743
07/23/02	09:27:06	82.984
07/23/02	09:28:06	83.411
07/23/02	09:29:06	82.501
07/23/02	09:30:06	81.335
07/23/02	09:31:06	82.245
07/23/02	09:32:06	83.070
07/23/02	09:33:06	84.236
07/23/02	09:34:06	82.728
07/23/02	09:35:06	81.733
07/23/02	09:36:06	82.927
07/23/02	09:37:06	82.387
07/23/02	09:38:06	83.553
07/23/02	09:39:06	82.586
07/23/02	09:40:06	82.785
07/23/02	09:41:06	83.354
07/23/02	09:42:06	82.444
07/23/02	09:43:06	83.070
07/23/02	09:44:06	82.444
07/23/02	09:45:06	84.520
07/23/02	09:46:06	82.871
07/23/02	09:47:06	83.837
07/23/02	09:48:06	82.643
07/23/02	09:49:06	84.150
07/23/02	09:50:06	84.662
07/23/02	09:51:06	82.927
07/23/02	09:52:06	84.492
07/23/02	09:53:06	82.586
07/23/02	09:54:06	87.193
07/23/02	09:55:06	81.904
07/23/02	09:56:06	79.685
07/23/02	09:57:06	80.795
07/23/02	09:58:06	79.316
07/23/02	09:59:06	79.629
07/23/02	10:00:06	80.283
07/23/02	10:01:06	78.292
07/23/02	10:02:06	81.761
07/23/02	10:03:06	79.543
07/23/02	10:04:06	80.709
07/23/02	10:05:06	78.292
07/23/02	10:06:06	78.662
07/23/02	10:07:06	80.368
07/23/02	10:08:06	79.316
07/23/02	10:09:06	79.799
07/23/02	10:10:06	79.316
07/23/02	10:11:06	80.169
07/23/02	10:12:06	80.453
07/23/02	10:13:06	78.633
07/23/02	10:14:06	78.576
07/23/02	10:15:06	79.799
07/23/02	10:16:06	78.974
07/23/02	10:17:06	78.832
07/23/02	10:18:06	80.766
07/23/02	10:19:06	79.600
07/23/02	10:20:06	82.074
07/23/02	10:21:06	85.316
07/23/02	10:22:06	85.686
07/23/02	10:23:06	83.610
07/23/02	10:24:06	84.918
07/23/02	10:25:06	82.558
07/23/02	10:26:06	83.070
07/23/02	10:27:06	84.179
07/23/02	10:28:06	86.283
07/23/02	10:29:06	83.126
07/23/02	10:30:06	79.259
07/23/02	10:31:06	81.961
07/23/02	10:32:06	84.179
07/23/02	10:33:06	80.709
07/23/02	10:34:06	82.927
07/23/02	10:35:06	85.601
07/23/02	10:36:06	85.800
07/23/02	10:37:06	83.837
07/23/02	10:38:06	85.544
07/23/02	10:39:06	85.003
07/23/02	10:40:06	82.643
07/23/02	10:41:06	83.354
07/23/02	10:42:06	85.402
07/23/02	10:43:06	85.458
07/23/02	10:44:06	84.861
07/23/02	10:45:06	83.837
07/23/02	10:46:06	83.951
07/23/02	10:47:06	83.553
07/23/02	10:48:06	83.837
07/23/02	10:49:06	80.425
07/23/02	10:50:06	81.420
07/23/02	10:51:06	80.510
07/23/02	10:52:06	83.070
07/23/02	10:53:06	84.492
07/23/02	10:54:06	81.534
07/23/02	10:55:06	80.937
07/23/02	10:56:06	81.193
07/23/02	10:57:06	82.728
07/23/02	10:58:06	82.586
07/23/02	10:59:06	80.795
07/23/02	11:00:06	81.050
07/23/02	11:01:06	79.941
07/23/02	11:02:06	77.837
07/23/02	11:03:06	81.562
07/23/02	11:04:06	81.050
07/23/02	11:05:06	53.891
07/23/02	11:06:06	70.215
07/23/02	11:07:06	85.885
07/23/02	11:08:06	81.250
07/23/02	11:09:06	82.245
07/23/02	11:10:06	81.335
07/23/02	11:11:06	80.453
07/23/02	11:12:06	82.871
07/23/02	11:13:06	82.216
07/23/02	11:14:06	80.652
07/23/02	11:15:06	82.359
07/23/02	11:16:06	81.193
07/23/02	11:17:06	81.079
07/23/02	11:18:06	81.534
07/23/02	11:19:06	80.567
07/23/02	11:20:06	80.368
07/23/02	11:21:06	81.392
07/23/02	11:22:06	81.392
07/23/02	11:23:06	80.937
07/23/02	11:24:06	80.994
07/23/02	11:25:06	80.652
07/23/02	11:26:06	81.335
07/23/02	11:27:06	81.420
07/23/02	11:28:06	80.510
07/23/02	11:29:06	83.610
07/23/02	11:30:06	81.420
07/23/02	11:31:06	81.619
07/23/02	11:32:06	81.875
07/23/02	11:33:06	83.354

1101 Highway 80 - No. 7556 cont.

Date	Time	Pres (PSI)
07/23/02	11:34:06	81.193
07/23/02	11:35:06	84.008
07/23/02	11:36:06	81.961
07/23/02	11:37:06	83.212
07/23/02	11:38:06	82.302
07/23/02	11:39:06	81.193
07/23/02	11:40:06	81.392
07/23/02	11:41:06	81.136
07/23/02	11:42:06	82.387
07/23/02	11:43:06	82.302
07/23/02	11:44:06	81.875
07/23/02	11:45:06	82.871
07/23/02	11:46:06	83.269
07/23/02	11:47:06	83.041
07/23/02	11:48:06	82.074
07/23/02	11:49:06	81.534
07/23/02	11:50:06	82.302
07/23/02	11:51:06	84.292
07/23/02	11:52:06	82.785
07/23/02	11:53:06	82.216
07/23/02	11:54:06	81.534
07/23/02	11:55:06	81.676
07/23/02	11:56:06	82.302
07/23/02	11:57:06	81.079
07/23/02	11:58:06	82.586
07/23/02	11:59:06	83.041
07/23/02	12:00:06	82.785
07/23/02	12:01:06	80.368
07/23/02	12:02:06	82.643
07/23/02	12:03:06	82.074
07/23/02	12:04:06	81.193
07/23/02	12:05:06	81.136
07/23/02	12:06:06	81.477
07/23/02	12:07:06	82.017
07/23/02	12:08:06	81.761
07/23/02	12:09:06	83.468
07/23/02	12:10:06	83.269
07/23/02	12:11:06	83.667
07/23/02	12:12:06	83.041
07/23/02	12:13:06	82.842
07/23/02	12:14:06	84.179
07/23/02	12:15:06	84.179
07/23/02	12:16:06	82.017
07/23/02	12:17:06	82.785
07/23/02	12:18:06	80.766
07/23/02	12:19:06	79.344
07/23/02	12:20:06	82.927
07/23/02	12:21:06	80.169
07/23/02	12:22:06	81.961
07/23/02	12:23:06	82.984
07/23/02	12:24:06	80.709
07/23/02	12:25:06	82.387
07/23/02	12:26:06	80.425
07/23/02	12:27:06	83.126
07/23/02	12:28:06	81.136
07/23/02	12:29:06	81.875
07/23/02	12:30:06	80.937
07/23/02	12:31:06	80.595
07/23/02	12:32:06	83.525
07/23/02	12:33:06	82.728
07/23/02	12:34:06	81.961
07/23/02	12:35:06	81.676
07/23/02	12:36:06	83.212
07/23/02	12:37:06	82.700
07/23/02	12:38:06	80.112
07/23/02	12:39:06	81.818

Date	Time	Pres (PSI)
07/23/02	12:40:06	81.050
07/23/02	12:41:06	82.017
07/23/02	12:42:06	80.795
07/23/02	12:43:06	83.041
07/23/02	12:44:06	83.269
07/23/02	12:45:06	83.183
07/23/02	12:46:06	84.378
07/23/02	12:47:06	81.733
07/23/02	12:48:06	83.610
07/23/02	12:49:06	82.302
07/23/02	12:50:06	84.662
07/23/02	12:51:06	82.927
07/23/02	12:52:06	84.150
07/23/02	12:53:06	83.695
07/23/02	12:54:06	82.558
07/23/02	12:55:06	82.586
07/23/02	12:56:06	82.103
07/23/02	12:57:06	82.160
07/23/02	12:58:06	80.709
07/23/02	12:59:06	81.562
07/23/02	13:00:06	81.534
07/23/02	13:01:06	82.444
07/23/02	13:02:06	82.700
07/23/02	13:03:06	82.387
07/23/02	13:04:06	83.809
07/23/02	13:05:06	82.216
07/23/02	13:06:06	80.311
07/23/02	13:07:06	81.193
07/23/02	13:08:06	81.761
07/23/02	13:09:06	83.525
07/23/02	13:10:06	61.058
07/23/02	13:11:06	63.873
07/23/02	13:12:06	59.693
07/23/02	13:13:06	57.958
07/23/02	13:14:06	56.451
07/23/02	13:15:06	56.366
07/23/02	13:16:06	53.664
07/23/02	13:17:06	53.067
07/23/02	13:18:06	50.991
07/23/02	13:19:06	50.564
07/23/02	13:20:06	62.423
07/23/02	13:21:06	63.817
07/23/02	13:22:06	77.666
07/23/02	13:23:06	80.652
07/23/02	13:24:06	80.994
07/23/02	13:25:06	81.733
07/23/02	13:26:06	81.733
07/23/02	13:27:06	82.558
07/23/02	13:28:06	80.595
07/23/02	13:29:06	82.842
07/23/02	13:30:06	82.444
07/23/02	13:31:06	81.761
07/23/02	13:32:06	80.709
07/23/02	13:33:06	81.136
07/23/02	13:34:06	82.074
07/23/02	13:35:06	82.160
07/23/02	13:36:06	79.629
07/23/02	13:37:06	80.425
07/23/02	13:38:06	79.259
07/23/02	13:39:06	79.003
07/23/02	13:40:06	79.316
07/23/02	13:41:06	78.377
07/23/02	13:42:06	79.202
07/23/02	13:43:06	80.084
07/23/02	13:44:06	84.918
07/23/02	13:45:06	85.970

Date	Time	Pres (PSI)
07/23/02	13:46:06	80.709
07/23/02	13:47:06	83.212
07/23/02	13:48:06	80.994
07/23/02	13:49:06	80.795
07/23/02	13:50:06	81.392
07/23/02	13:51:06	80.453
07/23/02	13:52:06	79.600
07/23/02	13:53:06	81.619
07/23/02	13:54:06	81.904
07/23/02	13:55:06	80.766
07/23/02	13:56:06	80.084
07/23/02	13:57:06	80.510
07/23/02	13:58:06	81.562
07/23/02	13:59:06	83.468
07/23/02	14:00:06	80.567
07/23/02	14:01:06	80.368
07/23/02	14:02:06	78.918
07/23/02	14:03:06	82.245
07/23/02	14:04:06	82.074
07/23/02	14:05:06	82.103
07/23/02	14:06:06	80.908
07/23/02	14:07:06	81.193
07/23/02	14:08:06	80.567
07/23/02	14:09:06	82.871
07/23/02	14:10:06	82.216
07/23/02	14:11:06	82.643
07/23/02	14:12:06	82.586
07/23/02	14:13:06	80.851
07/23/02	14:14:06	82.700
07/23/02	14:15:06	82.017
07/23/02	14:16:06	79.970
07/23/02	14:17:06	80.595
07/23/02	14:18:06	81.733
07/23/02	14:19:06	81.477
07/23/02	14:20:06	82.245
07/23/02	14:21:06	81.562
07/23/02	14:22:06	81.477
07/23/02	14:23:06	82.074
07/23/02	14:24:06	82.871
07/23/02	14:25:06	82.103
07/23/02	14:26:06	82.785
07/23/02	14:27:06	81.562
07/23/02	14:28:06	82.842
07/23/02	14:29:06	81.818
07/23/02	14:30:06	82.643
07/23/02	14:31:06	81.733
07/23/02	14:32:06	81.193
07/23/02	14:33:06	80.795
07/23/02	14:34:06	81.079
07/23/02	14:35:06	80.766
07/23/02	14:36:06	82.074
07/23/02	14:37:06	82.216
07/23/02	14:38:06	82.160
07/23/02	14:39:06	82.700
07/23/02	14:40:06	82.074
07/23/02	14:41:06	81.534
07/23/02	14:42:06	81.761
07/23/02	14:43:06	81.278
07/23/02	14:44:06	83.411
07/23/02	14:45:06	48.659
07/23/02	14:46:06	60.319
07/23/02	14:47:06	64.044
07/23/02	14:48:06	76.017
07/23/02	14:49:06	79.941
07/23/02	14:50:06	80.283
07/23/02	14:51:06	79.629

Date	Time	Pres (PSI)
07/23/02	14:52:06	81.534
07/23/02	14:53:06	80.795
07/23/02	14:54:06	78.320
07/23/02	14:55:06	80.169
07/23/02	14:56:06	81.562
07/23/02	14:57:06	80.169
07/23/02	14:58:06	79.828
07/23/02	14:59:06	82.387
07/23/02	15:00:06	81.050
07/23/02	15:01:06	79.884
07/23/02	15:02:06	80.311
07/23/02	15:03:06	81.761
07/23/02	15:04:06	80.453
07/23/02	15:05:06	79.884
07/23/02	15:06:06	79.600
07/23/02	15:07:06	81.193
07/23/02	15:08:06	80.453
07/23/02	15:09:06	82.302
07/23/02	15:10:06	80.795
07/23/02	15:11:06	79.941
07/23/02	15:12:06	80.652
07/23/02	15:13:06	81.193
07/23/02	15:14:06	80.169
07/23/02	15:15:06	80.652
07/23/02	15:16:06	79.543
07/23/02	15:17:06	81.193
07/23/02	15:18:06	81.250
07/23/02	15:19:06	83.667
07/23/02	15:20:06	89.611
07/23/02	15:21:06	81.534
07/23/02	15:22:06	85.800
07/23/02	15:23:06	84.236
07/23/02	15:24:06	83.752
07/23/02	15:25:06	85.117
07/23/02	15:26:06	85.686
07/23/02	15:27:06	85.686
07/23/02	15:28:06	85.146
07/23/02	15:29:06	85.487
07/23/02	15:30:06	84.918
07/23/02	15:31:06	84.861
07/23/02	15:32:06	85.601
07/23/02	15:33:06	85.743
07/23/02	15:34:06	84.179
07/23/02	15:35:06	85.316
07/23/02	15:36:06	83.667
07/23/02	15:37:06	82.558
07/23/02	15:38:06	82.359
07/23/02	15:39:06	85.345
07/23/02	15:40:06	82.728
07/23/02	15:41:06	81.278
07/23/02	15:42:06	84.292
07/23/02	15:43:06	83.752
07/23/02	15:44:06	85.060
07/23/02	15:45:06	85.885
07/23/02	15:46:06	84.435
07/23/02	15:47:06	84.833
07/23/02	15:48:06	85.970
07/23/02	15:49:06	85.487
07/23/02	15:50:06	84.321
07/23/02	15:51:06	85.345
07/23/02	15:52:06	85.117
07/23/02	15:53:06	84.833
07/23/02	15:54:06	83.070
07/23/02	15:55:06	84.861
07/23/02	15:56:06	86.653
07/23/02	15:57:06	84.662

1101 Highway 80 - No. 7556 cont.

Date	Time	Pres (PSI)
07/23/02	15:58:06	84.918
07/23/02	15:59:06	85.060
07/23/02	16:00:06	83.695
07/23/02	16:01:06	85.117
07/23/02	16:02:06	84.378
07/23/02	16:03:06	85.259
07/23/02	16:04:06	83.468
07/23/02	16:05:06	84.236
07/23/02	16:06:06	84.321
07/23/02	16:07:06	85.316
07/23/02	16:08:06	82.302
07/23/02	16:09:06	82.586
07/23/02	16:10:06	81.477
07/23/02	16:11:06	82.501
07/23/02	16:12:06	82.785
07/23/02	16:13:06	85.544
07/23/02	16:14:06	83.525
07/23/02	16:15:06	85.402
07/23/02	16:16:06	84.435
07/23/02	16:17:06	82.927
07/23/02	16:18:06	84.378
07/23/02	16:19:06	84.861
07/23/02	16:20:06	83.667
07/23/02	16:21:06	83.809
07/23/02	16:22:06	85.060
07/23/02	16:23:06	82.842
07/23/02	16:24:06	72.149
07/23/02	16:25:06	88.018
07/23/02	16:26:06	83.951
07/23/02	16:27:06	83.951
07/23/02	16:28:06	83.269
07/23/02	16:29:06	84.179
07/23/02	16:30:06	85.458
07/23/02	16:31:06	85.402
07/23/02	16:32:06	84.918
07/23/02	16:33:06	84.577
07/23/02	16:34:06	85.316
07/23/02	16:35:06	83.354
07/23/02	16:36:06	84.435
07/23/02	16:37:06	83.183
07/23/02	16:38:06	85.828
07/23/02	16:39:06	83.126
07/23/02	16:40:06	82.927
07/23/02	16:41:06	83.468
07/23/02	16:42:06	75.619
07/23/02	16:43:06	64.499
07/23/02	16:44:06	66.803
07/23/02	16:45:06	67.144
07/23/02	16:46:06	67.457
07/23/02	16:47:06	66.774
07/23/02	16:48:06	80.368
07/23/02	16:49:06	82.984
07/23/02	16:50:06	80.652
07/23/02	16:51:06	82.103
07/23/02	16:52:06	82.103
07/23/02	16:53:06	81.278
07/23/02	16:54:06	80.027
07/23/02	16:55:06	80.595
07/23/02	16:56:06	80.766
07/23/02	16:57:06	80.112
07/23/02	16:58:06	81.761
07/23/02	16:59:06	81.904
07/23/02	17:00:06	82.387
07/23/02	17:01:06	81.961
07/23/02	17:02:06	80.084
07/23/02	17:03:06	82.444
07/23/02	17:04:06	81.193
07/23/02	17:05:06	82.302
07/23/02	17:06:06	80.567
07/23/02	17:07:06	82.586
07/23/02	17:08:06	80.652
07/23/02	17:09:06	81.875
07/23/02	17:10:06	89.895
07/23/02	17:11:06	82.871
07/23/02	17:12:06	83.070
07/23/02	17:13:06	84.008
07/23/02	17:14:06	83.752
07/23/02	17:15:06	84.435
07/23/02	17:16:06	84.378
07/23/02	17:17:06	83.126
07/23/02	17:18:06	82.444
07/23/02	17:19:06	82.103
07/23/02	17:20:06	83.951
07/23/02	17:21:06	84.378
07/23/02	17:22:06	83.525
07/23/02	17:23:06	81.562
07/23/02	17:24:06	84.292
07/23/02	17:25:06	84.008
07/23/02	17:26:06	83.695
07/23/02	17:27:06	81.562
07/23/02	17:28:06	82.700
07/23/02	17:29:06	81.079
07/23/02	17:30:06	83.183
07/23/02	17:31:06	83.695
07/23/02	17:32:06	83.212
07/23/02	17:33:06	82.984
07/23/02	17:34:06	83.411
07/23/02	17:35:06	82.871
07/23/02	17:36:06	83.354
07/23/02	17:37:06	81.818
07/23/02	17:38:06	82.586
07/23/02	17:39:06	84.008
07/23/02	17:40:06	82.586
07/23/02	17:41:06	82.103
07/23/02	17:42:06	80.908
07/23/02	17:43:06	83.525
07/23/02	17:44:06	82.927
07/23/02	17:45:06	82.643
07/23/02	17:46:06	83.610
07/23/02	17:47:06	86.084
07/23/02	17:48:06	82.387
07/23/02	17:49:06	82.984
07/23/02	17:50:06	82.871
07/23/02	17:51:06	84.321
07/23/02	17:52:06	81.961
07/23/02	17:53:06	84.008
07/23/02	17:54:06	83.809
07/23/02	17:55:06	80.652
07/23/02	17:56:06	83.667
07/23/02	17:57:06	81.335
07/23/02	17:58:06	83.667
07/23/02	17:59:06	82.160
07/23/02	18:00:06	82.643
07/23/02	18:01:06	84.435
07/23/02	18:02:06	83.041
07/23/02	18:03:06	84.093
07/23/02	18:04:06	83.070
07/23/02	18:05:06	84.150
07/23/02	18:06:06	83.610
07/23/02	18:07:06	81.676
07/23/02	18:08:06	81.904
07/23/02	18:09:06	82.700
07/23/02	18:10:06	82.643
07/23/02	18:11:06	82.785
07/23/02	18:12:06	82.586
07/23/02	18:13:06	83.183
07/23/02	18:14:06	83.212
07/23/02	18:15:06	81.733
07/23/02	18:16:06	81.904
07/23/02	18:17:06	84.008
07/23/02	18:18:06	81.420
07/23/02	18:19:06	83.695
07/23/02	18:20:06	83.070
07/23/02	18:21:06	82.728
07/23/02	18:22:06	82.103
07/23/02	18:23:06	82.359
07/23/02	18:24:06	81.676
07/23/02	18:25:06	81.818
07/23/02	18:26:06	80.766
07/23/02	18:27:06	82.387
07/23/02	18:28:06	82.074
07/23/02	18:29:06	81.050
07/23/02	18:30:06	82.387
07/23/02	18:31:06	83.610
07/23/02	18:32:06	82.103
07/23/02	18:33:06	83.667
07/23/02	18:34:06	81.761
07/23/02	18:35:06	82.302
07/23/02	18:36:06	79.401
07/23/02	18:37:06	83.212
07/23/02	18:38:06	84.292
07/23/02	18:39:06	83.041
07/23/02	18:40:06	83.354
07/23/02	18:41:06	82.643
07/23/02	18:42:06	82.586
07/23/02	18:43:06	83.212
07/23/02	18:44:06	83.894
07/23/02	18:45:06	84.861
07/23/02	18:46:06	83.212
07/23/02	18:47:06	82.984
07/23/02	18:48:06	83.269
07/23/02	18:49:06	82.586
07/23/02	18:50:06	82.074
07/23/02	18:51:06	84.292
07/23/02	18:52:06	83.354
07/23/02	18:53:06	82.245
07/23/02	18:54:06	83.951
07/23/02	18:55:06	82.074
07/23/02	18:56:06	81.733
07/23/02	18:57:06	81.676
07/23/02	18:58:06	83.126
07/23/02	18:59:06	84.975
07/23/02	19:00:06	81.733
07/23/02	19:01:06	81.761
07/23/02	19:02:06	82.359
07/23/02	19:03:06	82.842
07/23/02	19:04:06	84.776
07/23/02	19:05:06	83.411
07/23/02	19:06:06	84.492
07/23/02	19:07:06	82.160
07/23/02	19:08:06	83.070
07/23/02	19:09:06	82.871
07/23/02	19:10:06	82.586
07/23/02	19:11:06	84.150
07/23/02	19:12:06	84.435
07/23/02	19:13:06	82.984
07/23/02	19:14:06	82.359
07/23/02	19:15:06	82.501
07/23/02	19:16:06	83.837
07/23/02	19:17:06	82.728
07/23/02	19:18:06	83.354
07/23/02	19:19:06	84.662
07/23/02	19:20:06	83.553
07/23/02	19:21:06	82.074
07/23/02	19:22:06	82.359
07/23/02	19:23:06	83.837
07/23/02	19:24:06	82.643
07/23/02	19:25:06	82.501
07/23/02	19:26:06	83.269
07/23/02	19:27:06	83.354
07/23/02	19:28:06	83.070
07/23/02	19:29:06	83.326
07/23/02	19:30:06	82.842
07/23/02	19:31:06	80.766
07/23/02	19:32:06	82.643
07/23/02	19:33:06	82.359
07/23/02	19:34:06	82.700
07/23/02	19:35:06	82.074
07/23/02	19:36:06	84.150
07/23/02	19:37:06	83.354
07/23/02	19:38:06	84.008
07/23/02	19:39:06	84.292
07/23/02	19:40:06	82.728
07/23/02	19:41:06	82.103
07/23/02	19:42:06	82.984
07/23/02	19:43:06	84.520
07/23/02	19:44:06	82.643
07/23/02	19:45:06	81.562
07/23/02	19:46:06	83.525
07/23/02	19:47:06	82.984
07/23/02	19:48:06	81.676
07/23/02	19:49:06	81.534
07/23/02	19:50:06	81.875
07/23/02	19:51:06	82.700
07/23/02	19:52:06	83.752
07/23/02	19:53:06	82.387
07/23/02	19:54:06	84.634
07/23/02	19:55:06	83.610
07/23/02	19:56:06	82.216
07/23/02	19:57:06	82.444
07/23/02	19:58:06	83.354
07/23/02	19:59:06	84.776
07/23/02	20:00:06	82.359
07/23/02	20:01:06	81.050
07/23/02	20:02:06	84.008
07/23/02	20:03:06	81.818
07/23/02	20:04:06	82.984
07/23/02	20:05:06	83.951
07/23/02	20:06:06	81.420
07/23/02	20:07:06	82.359
07/23/02	20:08:06	82.501
07/23/02	20:09:06	82.359
07/23/02	20:10:06	83.354
07/23/02	20:11:06	83.837
07/23/02	20:12:06	82.728
07/23/02	20:13:06	83.126
07/23/02	20:14:06	82.871
07/23/02	20:15:06	81.136
07/23/02	20:16:06	84.292
07/23/02	20:17:06	82.359
07/23/02	20:18:06	83.525
07/23/02	20:19:06	82.302
07/23/02	20:20:06	82.245
07/23/02	20:21:06	83.610

1101 Highway 80 - No. 7556 cont.

Date	Time	Pres (PSI)
07/23/02	20:22:06	82.927
07/23/02	20:23:06	82.359
07/23/02	20:24:06	80.851
07/23/02	20:25:06	83.326
07/23/02	20:26:06	82.017
07/23/02	20:27:06	82.444
07/23/02	20:28:06	82.160
07/23/02	20:29:06	81.676
07/23/02	20:30:06	81.136
07/23/02	20:31:06	81.335
07/23/02	20:32:06	83.126
07/23/02	20:33:06	82.017
07/23/02	20:34:06	82.871
07/23/02	20:35:06	83.951
07/23/02	20:36:06	81.534
07/23/02	20:37:06	83.667
07/23/02	20:38:06	82.501
07/23/02	20:39:06	83.610
07/23/02	20:40:06	83.212
07/23/02	20:41:06	83.525
07/23/02	20:42:06	83.126
07/23/02	20:43:06	83.411
07/23/02	20:44:06	80.937
07/23/02	20:45:06	84.776
07/23/02	20:46:06	82.444
07/23/02	20:47:06	83.126
07/23/02	20:48:06	83.212
07/23/02	20:49:06	82.927
07/23/02	20:50:06	83.695
07/23/02	20:51:06	82.245
07/23/02	20:52:06	83.411
07/23/02	20:53:06	84.292
07/23/02	20:54:06	83.326
07/23/02	20:55:06	82.074
07/23/02	20:56:06	82.785
07/23/02	20:57:06	82.728
07/23/02	20:58:06	81.335
07/23/02	20:59:06	82.160
07/23/02	21:00:06	82.359
07/23/02	21:01:06	80.994
07/23/02	21:02:06	80.937
07/23/02	21:03:06	84.321
07/23/02	21:04:06	82.216
07/23/02	21:05:06	82.984
07/23/02	21:06:06	81.875
07/23/02	21:07:06	81.676
07/23/02	21:08:06	80.453
07/23/02	21:09:06	82.842
07/23/02	21:10:06	82.586
07/23/02	21:11:06	80.709
07/23/02	21:12:06	81.761
07/23/02	21:13:06	82.984
07/23/02	21:14:06	82.728
07/23/02	21:15:06	82.302
07/23/02	21:16:06	82.785
07/23/02	21:17:06	82.216
07/23/02	21:18:06	82.074
07/23/02	21:19:06	83.183
07/23/02	21:20:06	83.468
07/23/02	21:21:06	82.558
07/23/02	21:22:06	82.700
07/23/02	21:23:06	82.501
07/23/02	21:24:06	81.875
07/23/02	21:25:06	82.728
07/23/02	21:26:06	81.050
07/23/02	21:27:06	81.477
07/23/02	21:28:06	83.183
07/23/02	21:29:06	82.216
07/23/02	21:30:06	82.728
07/23/02	21:31:06	83.070
07/23/02	21:32:06	81.562
07/23/02	21:33:06	82.160
07/23/02	21:34:06	83.126
07/23/02	21:35:06	82.074
07/23/02	21:36:06	83.894
07/23/02	21:37:06	83.667
07/23/02	21:38:06	82.586
07/23/02	21:39:06	83.326
07/23/02	21:40:06	83.553
07/23/02	21:41:06	82.586
07/23/02	21:42:06	82.160
07/23/02	21:43:06	84.719
07/23/02	21:44:06	81.050
07/23/02	21:45:06	82.103
07/23/02	21:46:06	84.833
07/23/02	21:47:06	72.803
07/23/02	21:48:06	60.176
07/23/02	21:49:06	62.423
07/23/02	21:50:06	64.101
07/23/02	21:51:06	63.618
07/23/02	21:52:06	63.191
07/23/02	21:53:06	62.110
07/23/02	21:54:06	62.793
07/23/02	21:55:06	63.191
07/23/02	21:56:06	62.992
07/23/02	21:57:06	62.850
07/23/02	21:58:06	73.600
07/23/02	21:59:06	79.401
07/23/02	22:00:06	80.510
07/23/02	22:01:06	80.027
07/23/02	22:02:06	80.567
07/23/02	22:03:06	79.344
07/23/02	22:04:06	79.799
07/23/02	22:05:06	79.003
07/23/02	22:06:06	80.994
07/23/02	22:07:06	79.970
07/23/02	22:08:06	81.761
07/23/02	22:09:06	80.226
07/23/02	22:10:06	80.425
07/23/02	22:11:06	81.250
07/23/02	22:12:06	80.084
07/23/02	22:13:06	77.467
07/23/02	22:14:06	79.600
07/23/02	22:15:06	79.259
07/23/02	22:16:06	80.652
07/23/02	22:17:06	81.335
07/23/02	22:18:06	80.937
07/23/02	22:19:06	80.368
07/23/02	22:20:06	87.620
07/23/02	22:21:06	81.392
07/23/02	22:22:06	83.837
07/23/02	22:23:06	83.951
07/23/02	22:24:06	83.553
07/23/02	22:25:06	82.842
07/23/02	22:26:06	84.292
07/23/02	22:27:06	81.619
07/23/02	22:28:06	81.961
07/23/02	22:29:06	83.610
07/23/02	22:30:06	83.411
07/23/02	22:31:06	83.411
07/23/02	22:32:06	84.520
07/23/02	22:33:06	83.553
07/23/02	22:34:06	81.904
07/23/02	22:35:06	84.719
07/23/02	22:36:06	83.212
07/23/02	22:37:06	85.060
07/23/02	22:38:06	86.852
07/23/02	22:39:06	84.492
07/23/02	22:40:06	85.885
07/23/02	22:41:06	84.634
07/23/02	22:42:06	85.259
07/23/02	22:43:06	86.852
07/23/02	22:44:06	84.008
07/23/02	22:45:06	83.212
07/23/02	22:46:06	85.316
07/23/02	22:47:06	84.833
07/23/02	22:48:06	84.861
07/23/02	22:49:06	84.435
07/23/02	22:50:06	86.027
07/23/02	22:51:06	86.937
07/23/02	22:52:06	85.146
07/23/02	22:53:06	84.861
07/23/02	22:54:06	86.795
07/23/02	22:55:06	85.259
07/23/02	22:56:06	84.292
07/23/02	22:57:06	84.321
07/23/02	22:58:06	84.662
07/23/02	22:59:06	85.060
07/23/02	23:00:06	84.292
07/23/02	23:01:06	84.093
07/23/02	23:02:06	84.037
07/23/02	23:03:06	84.236
07/23/02	23:04:06	84.634
07/23/02	23:05:06	84.520
07/23/02	23:06:06	84.833
07/23/02	23:07:06	84.321
07/23/02	23:08:06	84.008
07/23/02	23:09:06	85.544
07/23/02	23:10:06	85.203
07/23/02	23:11:06	85.060
07/23/02	23:12:06	86.084
07/23/02	23:13:06	85.544
07/23/02	23:14:06	84.861
07/23/02	23:15:06	85.800
07/23/02	23:16:06	86.852
07/23/02	23:17:06	83.894
07/23/02	23:18:06	82.984
07/23/02	23:19:06	86.369
07/23/02	23:20:06	85.629
07/23/02	23:21:06	86.710
07/23/02	23:22:06	85.003
07/23/02	23:23:06	85.402
07/23/02	23:24:06	86.596
07/23/02	23:25:06	85.800
07/23/02	23:26:06	85.743
07/23/02	23:27:06	87.079
07/23/02	23:28:06	86.511
07/23/02	23:29:06	86.653
07/23/02	23:30:06	86.653
07/23/02	23:31:06	85.345
07/23/02	23:32:06	85.828
07/23/02	23:33:06	85.601
07/23/02	23:34:06	84.150
07/23/02	23:35:06	86.425
07/23/02	23:36:06	86.425
07/23/02	23:37:06	85.402
07/23/02	23:38:06	86.113
07/23/02	23:39:06	87.961
07/23/02	23:40:06	87.335
07/23/02	23:41:06	87.677
07/23/02	23:42:06	87.535
07/23/02	23:43:06	88.160
07/23/02	23:44:06	87.762
07/23/02	23:45:06	86.454
07/23/02	23:46:06	87.620
07/23/02	23:47:06	86.994
07/23/02	23:48:06	86.568
07/23/02	23:49:06	86.511
07/23/02	23:50:06	87.136
07/23/02	23:51:06	87.620
07/23/02	23:52:06	88.103
07/23/02	23:53:06	86.596
07/23/02	23:54:06	87.677
07/23/02	23:55:06	86.994
07/23/02	23:56:06	89.269
07/23/02	23:57:06	87.591
07/23/02	23:58:06	87.904
07/23/02	23:59:06	87.734
07/24/02	00:00:06	87.335
07/24/02	00:01:06	87.876
07/24/02	00:02:06	85.942
07/24/02	00:03:06	87.876
07/24/02	00:04:06	88.445
07/24/02	00:05:06	89.554
07/24/02	00:06:06	86.994
07/24/02	00:07:06	88.160
07/24/02	00:08:06	87.904
07/24/02	00:09:06	86.653
07/24/02	00:10:06	88.018
07/24/02	00:11:06	89.184
07/24/02	00:12:06	88.587
07/24/02	00:13:06	87.079
07/24/02	00:14:06	88.302
07/24/02	00:15:06	87.079
07/24/02	00:16:06	88.558
07/24/02	00:17:06	88.359
07/24/02	00:18:06	87.478
07/24/02	00:19:06	89.212
07/24/02	00:20:06	88.501
07/24/02	00:21:06	87.961
07/24/02	00:22:06	89.042
07/24/02	00:23:06	88.871
07/24/02	00:24:06	89.411
07/24/02	00:25:06	88.445
07/24/02	00:26:06	88.160
07/24/02	00:27:06	88.587
07/24/02	00:28:06	89.525
07/24/02	00:29:06	89.070
07/24/02	00:30:06	88.445
07/24/02	00:31:06	89.952
07/24/02	00:32:06	89.468
07/24/02	00:33:06	89.355
07/24/02	00:34:06	89.070
07/24/02	00:35:06	89.554
07/24/02	00:36:06	89.355
07/24/02	00:37:06	88.501
07/24/02	00:38:06	89.952
07/24/02	00:39:06	89.525
07/24/02	00:40:06	90.151
07/24/02	00:41:06	89.838
07/24/02	00:42:06	89.525
07/24/02	00:43:06	89.838
07/24/02	00:44:06	88.985
07/24/02	00:45:06	89.525

1101 Highway 80 - No. 7556 cont.

Date	Time	Pres (PSI)	Date	Time	Pres (PSI)	Date	Time	Pres (PSI)	Date	Time	Pres (PSI)
07/24/02	00:46:06	89.525	07/24/02	01:52:06	87.591	07/24/02	02:58:06	89.042	07/24/02	04:04:06	86.425
07/24/02	00:47:06	90.521	07/24/02	01:53:06	87.961	07/24/02	02:59:06	88.217	07/24/02	04:05:06	86.084
07/24/02	00:48:06	89.326	07/24/02	01:54:06	88.302	07/24/02	03:00:06	88.701	07/24/02	04:06:06	85.060
07/24/02	00:49:06	90.151	07/24/02	01:55:06	88.701	07/24/02	03:01:06	89.411	07/24/02	04:07:06	85.316
07/24/02	00:50:06	88.843	07/24/02	01:56:06	88.644	07/24/02	03:02:06	87.279	07/24/02	04:08:06	85.942
07/24/02	00:51:06	89.554	07/24/02	01:57:06	88.018	07/24/02	03:03:06	88.245	07/24/02	04:09:06	85.743
07/24/02	00:52:06	89.269	07/24/02	01:58:06	88.245	07/24/02	03:04:06	89.184	07/24/02	04:10:06	86.027
07/24/02	00:53:06	88.558	07/24/02	01:59:06	88.302	07/24/02	03:05:06	89.554	07/24/02	04:11:06	85.828
07/24/02	00:54:06	89.468	07/24/02	02:00:06	88.729	07/24/02	03:06:06	89.411	07/24/02	04:12:06	85.885
07/24/02	00:55:06	88.302	07/24/02	02:01:06	89.184	07/24/02	03:07:06	89.042	07/24/02	04:13:06	86.027
07/24/02	00:56:06	89.753	07/24/02	02:02:06	87.335	07/24/02	03:08:06	88.871	07/24/02	04:14:06	86.710
07/24/02	00:57:06	87.904	07/24/02	02:03:06	89.525	07/24/02	03:09:06	88.388	07/24/02	04:15:06	85.885
07/24/02	00:58:06	89.810	07/24/02	02:04:06	87.876	07/24/02	03:10:06	88.388	07/24/02	04:16:06	85.345
07/24/02	00:59:06	87.051	07/24/02	02:05:06	89.838	07/24/02	03:11:06	89.070	07/24/02	04:17:06	85.743
07/24/02	01:00:06	88.558	07/24/02	02:06:06	88.871	07/24/02	03:12:06	89.696	07/24/02	04:18:06	86.511
07/24/02	01:01:06	89.355	07/24/02	02:07:06	88.843	07/24/02	03:13:06	89.326	07/24/02	04:19:06	85.686
07/24/02	01:02:06	88.928	07/24/02	02:08:06	89.810	07/24/02	03:14:06	89.070	07/24/02	04:20:06	86.027
07/24/02	01:03:06	89.212	07/24/02	02:09:06	89.525	07/24/02	03:15:06	88.501	07/24/02	04:21:06	86.113
07/24/02	01:04:06	88.928	07/24/02	02:10:06	88.729	07/24/02	03:16:06	89.326	07/24/02	04:22:06	86.283
07/24/02	01:05:06	88.843	07/24/02	02:11:06	88.843	07/24/02	03:17:06	89.184	07/24/02	04:23:06	86.568
07/24/02	01:06:06	88.871	07/24/02	02:12:06	88.843	07/24/02	03:18:06	88.644	07/24/02	04:24:06	86.425
07/24/02	01:07:06	88.843	07/24/02	02:13:06	88.359	07/24/02	03:19:06	89.525	07/24/02	04:25:06	86.454
07/24/02	01:08:06	89.952	07/24/02	02:14:06	88.388	07/24/02	03:20:06	88.359	07/24/02	04:26:06	86.084
07/24/02	01:09:06	88.558	07/24/02	02:15:06	88.928	07/24/02	03:21:06	88.160	07/24/02	04:27:06	85.686
07/24/02	01:10:06	88.729	07/24/02	02:16:06	79.486	07/24/02	03:22:06	88.018	07/24/02	04:28:06	85.686
07/24/02	01:11:06	88.160	07/24/02	02:17:06	80.425	07/24/02	03:23:06	88.558	07/24/02	04:29:06	85.316
07/24/02	01:12:06	88.928	07/24/02	02:18:06	79.543	07/24/02	03:24:06	88.587	07/24/02	04:30:06	84.435
07/24/02	01:13:06	88.018	07/24/02	02:19:06	79.401	07/24/02	03:25:06	88.644	07/24/02	04:31:06	85.743
07/24/02	01:14:06	88.985	07/24/02	02:20:06	80.226	07/24/02	03:26:06	88.871	07/24/02	04:32:06	82.160
07/24/02	01:15:06	75.078	07/24/02	02:21:06	80.027	07/24/02	03:27:06	88.302	07/24/02	04:33:06	84.435
07/24/02	01:16:06	76.586	07/24/02	02:22:06	79.600	07/24/02	03:28:06	89.070	07/24/02	04:34:06	88.160
07/24/02	01:17:06	76.387	07/24/02	02:23:06	79.828	07/24/02	03:29:06	88.985	07/24/02	04:35:06	86.767
07/24/02	01:18:06	87.876	07/24/02	02:24:06	80.453	07/24/02	03:30:06	90.521	07/24/02	04:36:06	86.425
07/24/02	01:19:06	88.388	07/24/02	02:25:06	79.970	07/24/02	03:31:06	89.042	07/24/02	04:37:06	86.767
07/24/02	01:20:06	87.478	07/24/02	02:26:06	79.742	07/24/02	03:32:06	89.667	07/24/02	04:38:06	86.312
07/24/02	01:21:06	88.871	07/24/02	02:27:06	88.786	07/24/02	03:33:06	89.411	07/24/02	04:39:06	87.079
07/24/02	01:22:06	87.876	07/24/02	02:28:06	89.696	07/24/02	03:34:06	88.871	07/24/02	04:40:06	86.994
07/24/02	01:23:06	87.904	07/24/02	02:29:06	87.051	07/24/02	03:35:06	89.269	07/24/02	04:41:06	86.909
07/24/02	01:24:06	88.644	07/24/02	02:30:06	89.269	07/24/02	03:36:06	89.326	07/24/02	04:42:06	86.937
07/24/02	01:25:06	87.904	07/24/02	02:31:06	88.160	07/24/02	03:37:06	88.843	07/24/02	04:43:06	87.051
07/24/02	01:26:06	88.729	07/24/02	02:32:06	88.245	07/24/02	03:38:06	89.411	07/24/02	04:44:06	86.596
07/24/02	01:27:06	89.127	07/24/02	02:33:06	88.587	07/24/02	03:39:06	89.070	07/24/02	04:45:06	86.852
07/24/02	01:28:06	88.359	07/24/02	02:34:06	88.843	07/24/02	03:40:06	89.184	07/24/02	04:46:06	87.051
07/24/02	01:29:06	88.729	07/24/02	02:35:06	88.985	07/24/02	03:41:06	89.667	07/24/02	04:47:06	87.250
07/24/02	01:30:06	88.558	07/24/02	02:36:06	88.388	07/24/02	03:42:06	89.269	07/24/02	04:48:06	86.369
07/24/02	01:31:06	88.985	07/24/02	02:37:06	87.961	07/24/02	03:43:06	89.525	07/24/02	04:49:06	86.710
07/24/02	01:32:06	84.975	07/24/02	02:38:06	88.217	07/24/02	03:44:06	88.843	07/24/02	04:50:06	87.421
07/24/02	01:33:06	86.169	07/24/02	02:39:06	88.644	07/24/02	03:45:06	89.326	07/24/02	04:51:06	86.596
07/24/02	01:34:06	89.838	07/24/02	02:40:06	87.734	07/24/02	03:46:06	89.212	07/24/02	04:52:06	86.653
07/24/02	01:35:06	88.445	07/24/02	02:41:06	87.819	07/24/02	03:47:06	86.795	07/24/02	04:53:06	85.316
07/24/02	01:36:06	88.359	07/24/02	02:42:06	88.558	07/24/02	03:48:06	88.558	07/24/02	04:54:06	86.511
07/24/02	01:37:06	88.160	07/24/02	02:43:06	89.127	07/24/02	03:49:06	88.388	07/24/02	04:55:06	87.591
07/24/02	01:38:06	88.388	07/24/02	02:44:06	88.729	07/24/02	03:50:06	89.184	07/24/02	04:56:06	87.051
07/24/02	01:39:06	87.904	07/24/02	02:45:06	88.160	07/24/02	03:51:06	88.587	07/24/02	04:57:06	87.051
07/24/02	01:40:06	87.620	07/24/02	02:46:06	88.587	07/24/02	03:52:06	88.644	07/24/02	04:58:06	87.677
07/24/02	01:41:06	88.245	07/24/02	02:47:06	89.127	07/24/02	03:53:06	88.729	07/24/02	04:59:06	86.312
07/24/02	01:42:06	88.245	07/24/02	02:48:06	88.928	07/24/02	03:54:06	88.928	07/24/02	05:00:06	85.885
07/24/02	01:43:06	87.819	07/24/02	02:49:06	88.843	07/24/02	03:55:06	87.677	07/24/02	05:01:06	81.562
07/24/02	01:44:06	87.421	07/24/02	02:50:06	88.501	07/24/02	03:56:06	81.619	07/24/02	05:02:06	83.070
07/24/02	01:45:06	87.762	07/24/02	02:51:06	87.876	07/24/02	03:57:06	76.642	07/24/02	05:03:06	83.752
07/24/02	01:46:06	88.103	07/24/02	02:52:06	87.535	07/24/02	03:58:06	87.193	07/24/02	05:04:06	83.183
07/24/02	01:47:06	88.103	07/24/02	02:53:06	87.734	07/24/02	03:59:06	87.279	07/24/02	05:05:06	82.558
07/24/02	01:48:06	86.568	07/24/02	02:54:06	87.591	07/24/02	04:00:06	86.113	07/24/02	05:06:06	83.411
07/24/02	01:49:06	88.217	07/24/02	02:55:06	87.904	07/24/02	04:01:06	88.075	07/24/02	05:07:06	83.837
07/24/02	01:50:06	87.734	07/24/02	02:56:06	87.677	07/24/02	04:02:06	86.596	07/24/02	05:08:06	83.894
07/24/02	01:51:06	88.644	07/24/02	02:57:06	90.492	07/24/02	04:03:06	86.312	07/24/02	05:09:06	83.809

1101 Highway 80 - No. 7556 cont.

Date	Time	Pres (PSI)
07/24/02	05:10:06	84.918
07/24/02	05:11:06	82.871
07/24/02	05:12:06	84.662
07/24/02	05:13:06	84.918
07/24/02	05:14:06	84.008
07/24/02	05:15:06	85.259
07/24/02	05:16:06	84.008
07/24/02	05:17:06	87.421
07/24/02	05:18:06	91.743
07/24/02	05:19:06	87.535
07/24/02	05:20:06	86.226
07/24/02	05:21:06	89.525
07/24/02	05:22:06	87.734
07/24/02	05:23:06	88.729
07/24/02	05:24:06	87.819
07/24/02	05:25:06	88.103
07/24/02	05:26:06	88.558
07/24/02	05:27:06	88.103
07/24/02	05:28:06	88.445
07/24/02	05:29:06	88.701
07/24/02	05:30:06	89.184
07/24/02	05:31:06	88.701
07/24/02	05:32:06	88.587
07/24/02	05:33:06	87.279
07/24/02	05:34:06	88.587
07/24/02	05:35:06	87.421
07/24/02	05:36:06	87.335
07/24/02	05:37:06	88.701
07/24/02	05:38:06	88.359
07/24/02	05:39:06	87.421
07/24/02	05:40:06	88.103
07/24/02	05:41:06	87.904
07/24/02	05:42:06	88.729
07/24/02	05:43:06	87.734
07/24/02	05:44:06	86.994
07/24/02	05:45:06	88.558
07/24/02	05:46:06	88.160
07/24/02	05:47:06	88.928
07/24/02	05:48:06	88.103
07/24/02	05:49:06	87.961
07/24/02	05:50:06	88.388
07/24/02	05:51:06	88.160
07/24/02	05:52:06	88.445
07/24/02	05:53:06	86.568
07/24/02	05:54:06	86.568
07/24/02	05:55:06	87.421
07/24/02	05:56:06	87.591
07/24/02	05:57:06	85.828
07/24/02	05:58:06	88.587
07/24/02	05:59:06	85.402
07/24/02	06:00:06	88.245
07/24/02	06:01:06	86.909
07/24/02	06:02:06	86.425
07/24/02	06:03:06	86.909
07/24/02	06:04:06	87.478
07/24/02	06:05:06	87.335
07/24/02	06:06:06	86.852
07/24/02	06:07:06	85.629
07/24/02	06:08:06	86.795
07/24/02	06:09:06	86.596
07/24/02	06:10:06	86.169
07/24/02	06:11:06	85.601
07/24/02	06:12:06	86.113
07/24/02	06:13:06	85.800
07/24/02	06:14:06	85.743
07/24/02	06:15:06	85.800

Date	Time	Pres (PSI)
07/24/02	06:16:06	87.620
07/24/02	06:17:06	85.601
07/24/02	06:18:06	86.425
07/24/02	06:19:06	87.677
07/24/02	06:20:06	86.454
07/24/02	06:21:06	84.975
07/24/02	06:22:06	86.283
07/24/02	06:23:06	86.027
07/24/02	06:24:06	85.458
07/24/02	06:25:06	86.454
07/24/02	06:26:06	86.596
07/24/02	06:27:06	86.425
07/24/02	06:28:06	86.852
07/24/02	06:29:06	87.478
07/24/02	06:30:06	86.653
07/24/02	06:31:06	85.316
07/24/02	06:32:06	86.425
07/24/02	06:33:06	85.601
07/24/02	06:34:06	85.259
07/24/02	06:35:06	87.193
07/24/02	06:36:06	84.577
07/24/02	06:37:06	85.345
07/24/02	06:38:06	86.653
07/24/02	06:39:06	85.544
07/24/02	06:40:06	87.051
07/24/02	06:41:06	85.970
07/24/02	06:42:06	86.454
07/24/02	06:43:06	85.402
07/24/02	06:44:06	86.113
07/24/02	06:45:06	86.909
07/24/02	06:46:06	87.193
07/24/02	06:47:06	85.743
07/24/02	06:48:06	87.079
07/24/02	06:49:06	87.620
07/24/02	06:50:06	85.800
07/24/02	06:51:06	84.321
07/24/02	06:52:06	86.226
07/24/02	06:53:06	85.003
07/24/02	06:54:06	86.027
07/24/02	06:55:06	84.008
07/24/02	06:56:06	86.027
07/24/02	06:57:06	85.686
07/24/02	06:58:06	87.279
07/24/02	06:59:06	83.610
07/24/02	07:00:06	85.544
07/24/02	07:01:06	85.146
07/24/02	07:02:06	85.601
07/24/02	07:03:06	84.719
07/24/02	07:04:06	86.084
07/24/02	07:05:06	85.458
07/24/02	07:06:06	83.070
07/24/02	07:07:06	83.837
07/24/02	07:08:06	85.970
07/24/02	07:09:06	82.842
07/24/02	07:10:06	84.037
07/24/02	07:11:06	82.984
07/24/02	07:12:06	84.833
07/24/02	07:13:06	83.667
07/24/02	07:14:06	82.728
07/24/02	07:15:06	84.634
07/24/02	07:16:06	81.761
07/24/02	07:17:06	82.927
07/24/02	07:18:06	82.387
07/24/02	07:19:06	84.150
07/24/02	07:20:06	83.411
07/24/02	07:21:06	84.008

Date	Time	Pres (PSI)
07/24/02	07:22:06	82.501
07/24/02	07:23:06	83.752
07/24/02	07:24:06	82.842
07/24/02	07:25:06	81.619
07/24/02	07:26:06	83.951
07/24/02	07:27:06	83.468
07/24/02	07:28:06	83.610
07/24/02	07:29:06	82.586
07/24/02	07:30:06	83.126
07/24/02	07:31:06	83.411
07/24/02	07:32:06	83.183
07/24/02	07:33:06	84.236
07/24/02	07:34:06	86.312
07/24/02	07:35:06	84.378
07/24/02	07:36:06	82.017
07/24/02	07:37:06	83.951
07/24/02	07:38:06	85.316
07/24/02	07:39:06	84.435
07/24/02	07:40:06	83.837
07/24/02	07:41:06	85.259
07/24/02	07:42:06	85.487
07/24/02	07:43:06	84.150
07/24/02	07:44:06	85.259
07/24/02	07:45:06	84.577
07/24/02	07:46:06	85.146
07/24/02	07:47:06	84.435
07/24/02	07:48:06	84.776
07/24/02	07:49:06	84.179
07/24/02	07:50:06	86.169
07/24/02	07:51:06	84.321
07/24/02	07:52:06	85.970
07/24/02	07:53:06	85.601
07/24/02	07:54:06	87.279
07/24/02	07:55:06	85.885
07/24/02	07:56:06	87.961
07/24/02	07:57:06	86.511
07/24/02	07:58:06	84.179
07/24/02	07:59:06	85.686
07/24/02	08:00:06	86.369
07/24/02	08:01:06	86.425
07/24/02	08:02:06	82.387
07/24/02	08:03:06	82.359
07/24/02	08:04:06	82.216
07/24/02	08:05:06	85.003
07/24/02	08:06:06	82.160
07/24/02	08:07:06	83.070
07/24/02	08:08:06	83.326
07/24/02	08:09:06	82.558
07/24/02	08:10:06	85.345
07/24/02	08:11:06	81.818
07/24/02	08:12:06	84.008
07/24/02	08:13:06	83.837
07/24/02	08:14:06	85.629
07/24/02	08:15:06	80.851
07/24/02	08:16:06	82.387
07/24/02	08:17:06	82.302
07/24/02	08:18:06	83.695
07/24/02	08:19:06	80.908
07/24/02	08:20:06	83.695
07/24/02	08:21:06	84.008
07/24/02	08:22:06	84.492
07/24/02	08:23:06	72.434
07/24/02	08:24:06	66.860
07/24/02	08:25:06	70.869
07/24/02	08:26:06	68.936
07/24/02	08:27:06	68.452

Date	Time	Pres (PSI)
07/24/02	08:28:06	67.741
07/24/02	08:29:06	80.994
07/24/02	08:30:06	84.008
07/24/02	08:31:06	83.126
07/24/02	08:32:06	82.728
07/24/02	08:33:06	82.586
07/24/02	08:34:06	82.785
07/24/02	08:35:06	82.586
07/24/02	08:36:06	83.411
07/24/02	08:37:06	81.619
07/24/02	08:38:06	81.136
07/24/02	08:39:06	82.302
07/24/02	08:40:06	80.709
07/24/02	08:41:06	81.136
07/24/02	08:42:06	81.392
07/24/02	08:43:06	81.562
07/24/02	08:44:06	82.387
07/24/02	08:45:06	82.160
07/24/02	08:46:06	79.458
07/24/02	08:47:06	79.458
07/24/02	08:48:06	80.084
07/24/02	08:49:06	79.799
07/24/02	08:50:06	80.027
07/24/02	08:51:06	79.117
07/24/02	08:52:06	80.311
07/24/02	08:53:06	78.832
07/24/02	08:54:06	79.685
07/24/02	08:55:06	78.662
07/24/02	08:56:06	81.250
07/24/02	08:57:06	79.486
07/24/02	08:58:06	81.676
07/24/02	08:59:06	80.226
07/24/02	09:00:06	80.795
07/24/02	09:01:06	81.193
07/24/02	09:02:06	89.838
07/24/02	09:03:06	84.975
07/24/02	09:04:06	82.444
07/24/02	09:05:06	83.411
07/24/02	09:06:06	81.818
07/24/02	09:07:06	83.695
07/24/02	09:08:06	83.667
07/24/02	09:09:06	82.586
07/24/02	09:10:06	85.885
07/24/02	09:11:06	84.008
07/24/02	09:12:06	83.894
07/24/02	09:13:06	82.927
07/24/02	09:14:06	82.785
07/24/02	09:15:06	83.951
07/24/02	09:16:06	83.468
07/24/02	09:17:06	83.667
07/24/02	09:18:06	82.871
07/24/02	09:19:06	81.193
07/24/02	09:20:06	78.775
07/24/02	09:21:06	77.325
07/24/02	09:22:06	78.178
07/24/02	09:23:06	78.434
07/24/02	09:24:06	80.027
07/24/02	09:25:06	77.894
07/24/02	09:26:06	78.235
07/24/02	09:27:06	77.467
07/24/02	09:28:06	75.476
07/24/02	09:29:06	76.728
07/24/02	09:30:06	76.870
07/24/02	09:31:06	76.301
07/24/02	09:32:06	75.818
07/24/02	09:33:06	77.609

1101 Highway 80 - No. 7556 cont.

Date	Time	Pres (PSI)
07/24/02	09:34:06	79.003
07/24/02	09:35:06	78.491
07/24/02	09:36:06	79.060
07/24/02	09:37:06	77.752
07/24/02	09:38:06	79.401
07/24/02	09:39:06	79.401
07/24/02	09:40:06	79.145
07/24/02	09:41:06	79.600
07/24/02	09:42:06	78.861
07/24/02	09:43:06	85.402
07/24/02	09:44:06	83.468
07/24/02	09:45:06	82.245
07/24/02	09:46:06	82.785
07/24/02	09:47:06	81.818
07/24/02	09:48:06	82.444
07/24/02	09:49:06	83.667
07/24/02	09:50:06	83.269
07/24/02	09:51:06	84.008
07/24/02	09:52:06	82.927
07/24/02	09:53:06	83.041
07/24/02	09:54:06	83.695
07/24/02	09:55:06	83.951
07/24/02	09:56:06	84.861
07/24/02	09:57:06	82.927
07/24/02	09:58:06	83.411
07/24/02	09:59:06	82.871
07/24/02	10:00:06	83.326
07/24/02	10:01:06	83.610
07/24/02	10:02:06	82.074
07/24/02	10:03:06	81.193
07/24/02	10:04:06	83.468
07/24/02	10:05:06	81.761
07/24/02	10:06:06	73.486
07/24/02	10:07:06	74.595
07/24/02	10:08:06	73.116
07/24/02	10:09:06	74.766
07/24/02	10:10:06	74.652
07/24/02	10:11:06	74.851
07/24/02	10:12:06	74.225
07/24/02	10:13:06	75.476
07/24/02	10:14:06	75.192
07/24/02	10:15:06	74.652
07/24/02	10:16:06	72.149
07/24/02	10:17:06	72.633
07/24/02	10:18:06	72.661
07/24/02	10:19:06	71.751
07/24/02	10:20:06	71.523
07/24/02	10:21:06	71.523
07/24/02	10:22:06	73.799
07/24/02	10:23:06	75.960
07/24/02	10:24:06	84.918
07/24/02	10:25:06	85.402
07/24/02	10:26:06	81.562
07/24/02	10:27:06	81.420
07/24/02	10:28:06	83.695
07/24/02	10:29:06	82.103
07/24/02	10:30:06	83.525
07/24/02	10:31:06	83.610
07/24/02	10:32:06	82.984
07/24/02	10:33:06	81.477
07/24/02	10:34:06	82.103
07/24/02	10:35:06	84.008
07/24/02	10:36:06	82.359
07/24/02	10:37:06	82.871
07/24/02	10:38:06	83.183
07/24/02	10:39:06	82.074
07/24/02	10:40:06	82.302
07/24/02	10:41:06	81.050
07/24/02	10:42:06	82.842
07/24/02	10:43:06	82.785
07/24/02	10:44:06	82.842
07/24/02	10:45:06	81.961
07/24/02	10:46:06	83.354
07/24/02	10:47:06	83.041
07/24/02	10:48:06	82.245
07/24/02	10:49:06	83.525
07/24/02	10:50:06	83.468
07/24/02	10:51:06	83.326
07/24/02	10:52:06	80.453
07/24/02	10:53:06	79.941
07/24/02	10:54:06	80.851
07/24/02	10:55:06	81.534
07/24/02	10:56:06	82.785
07/24/02	10:57:06	81.961
07/24/02	10:58:06	83.553
07/24/02	10:59:06	83.525
07/24/02	11:00:06	61.342
07/24/02	11:01:06	41.606
07/24/02	11:02:06	30.230
07/24/02	11:03:06	37.454
07/24/02	11:04:06	55.882
07/24/02	11:05:06	50.280
07/24/02	11:06:06	52.384
07/24/02	11:07:06	52.299
07/24/02	11:08:06	50.024
07/24/02	11:09:06	48.431
07/24/02	11:10:06	48.488
07/24/02	11:11:06	49.540
07/24/02	11:12:06	47.948
07/24/02	11:13:06	47.322
07/24/02	11:14:06	48.175
07/24/02	11:15:06	47.265
07/24/02	11:16:06	45.388
07/24/02	11:17:06	46.497
07/24/02	11:18:06	48.090
07/24/02	11:19:06	52.583
07/24/02	11:20:06	54.631
07/24/02	11:21:06	54.147
07/24/02	11:22:06	52.868
07/24/02	11:23:06	57.674
07/24/02	11:24:06	59.323
07/24/02	11:25:06	62.025
07/24/02	11:26:06	64.727
07/24/02	11:27:06	69.817
07/24/02	11:28:06	76.927
07/24/02	11:29:06	80.027
07/24/02	11:30:06	81.136
07/24/02	11:31:06	80.112
07/24/02	11:32:06	80.652
07/24/02	11:33:06	82.103
07/24/02	11:34:06	83.126
07/24/02	11:35:06	82.359
07/24/02	11:36:06	82.017
07/24/02	11:37:06	83.837
07/24/02	11:38:06	84.292
07/24/02	11:39:06	80.652
07/24/02	11:40:06	82.643
07/24/02	11:41:06	82.643
07/24/02	11:42:06	82.927
07/24/02	11:43:06	82.160
07/24/02	11:44:06	82.785
07/24/02	11:45:06	82.216
07/24/02	11:46:06	82.245
07/24/02	11:47:06	83.070
07/24/02	11:48:06	82.074
07/24/02	11:49:06	83.326
07/24/02	11:50:06	83.326
07/24/02	11:51:06	83.183
07/24/02	11:52:06	83.837
07/24/02	11:53:06	82.558
07/24/02	11:54:06	81.733
07/24/02	11:55:06	83.695
07/24/02	11:56:06	82.728
07/24/02	11:57:06	82.444
07/24/02	11:58:06	82.444
07/24/02	11:59:06	84.037
07/24/02	12:00:06	82.103
07/24/02	12:01:06	81.961
07/24/02	12:02:06	83.326
07/24/02	12:03:06	83.269
07/24/02	12:04:06	81.733
07/24/02	12:05:06	81.420
07/24/02	12:06:06	81.761
07/24/02	12:07:06	82.017
07/24/02	12:08:06	84.292
07/24/02	12:09:06	84.492
07/24/02	12:10:06	82.871
07/24/02	12:11:06	82.017
07/24/02	12:12:06	82.017
07/24/02	12:13:06	81.761
07/24/02	12:14:06	81.392
07/24/02	12:15:06	81.420
07/24/02	12:16:06	48.374
07/24/02	12:17:06	47.322
07/24/02	12:18:06	67.969
07/24/02	12:19:06	71.353
07/24/02	12:20:06	82.444
07/24/02	12:21:06	86.312
07/24/02	12:22:06	84.577
07/24/02	12:23:06	82.444
07/24/02	12:24:06	81.676
07/24/02	12:25:06	82.359
07/24/02	12:26:06	80.937
07/24/02	12:27:06	81.818
07/24/02	12:28:06	81.079
07/24/02	12:29:06	80.027
07/24/02	12:30:06	82.444
07/24/02	12:31:06	80.709
07/24/02	12:32:06	82.984
07/24/02	12:33:06	81.619
07/24/02	12:34:06	82.842
07/24/02	12:35:06	82.160
07/24/02	12:36:06	81.079
07/24/02	12:37:06	80.112
07/24/02	12:38:06	81.733
07/24/02	12:39:06	79.685
07/24/02	12:40:06	80.908
07/24/02	12:41:06	81.278
07/24/02	12:42:06	80.652
07/24/02	12:43:06	81.562
07/24/02	12:44:06	80.084
07/24/02	12:45:06	82.103
07/24/02	12:46:06	81.875
07/24/02	12:47:06	81.818
07/24/02	12:48:06	80.795
07/24/02	12:49:06	81.818
07/24/02	12:50:06	78.861
07/24/02	12:51:06	80.595
07/24/02	12:52:06	80.795
07/24/02	12:53:06	80.027
07/24/02	12:54:06	80.027
07/24/02	12:55:06	81.392
07/24/02	12:56:06	81.278
07/24/02	12:57:06	81.136
07/24/02	12:58:06	81.050
07/24/02	12:59:06	79.629
07/24/02	13:00:06	77.695
07/24/02	13:01:06	79.259
07/24/02	13:02:06	76.102
07/24/02	13:03:06	77.951
07/24/02	13:04:06	77.126
07/24/02	13:05:06	77.553
07/24/02	13:06:06	79.941
07/24/02	13:07:06	77.695
07/24/02	13:08:06	78.662
07/24/02	13:09:06	77.553
07/24/02	13:10:06	77.808
07/24/02	13:11:06	78.235
07/24/02	13:12:06	76.586
07/24/02	13:13:06	77.268
07/24/02	13:14:06	78.861
07/24/02	13:15:06	78.775
07/24/02	13:16:06	79.344
07/24/02	13:17:06	79.799
07/24/02	13:18:06	79.003
07/24/02	13:19:06	78.150
07/24/02	13:20:06	78.861
07/24/02	13:21:06	79.543
07/24/02	13:22:06	80.595
07/24/02	13:23:06	83.041
07/24/02	13:24:06	80.766
07/24/02	13:25:06	82.245
07/24/02	13:26:06	83.212
07/24/02	13:27:06	81.562
07/24/02	13:28:06	80.112
07/24/02	13:29:06	81.278
07/24/02	13:30:06	80.652
07/24/02	13:31:06	81.392
07/24/02	13:32:06	83.041
07/24/02	13:33:06	81.875
07/24/02	13:34:06	81.420
07/24/02	13:35:06	79.543
07/24/02	13:36:06	79.145
07/24/02	13:37:06	81.278
07/24/02	13:38:06	82.785
07/24/02	13:39:06	82.984
07/24/02	13:40:06	81.619
07/24/02	13:41:06	81.534
07/24/02	13:42:06	77.467
07/24/02	13:43:06	79.117
07/24/02	13:44:06	78.377
07/24/02	13:45:06	79.629
07/24/02	13:46:06	80.368
07/24/02	13:47:06	80.425
07/24/02	13:48:06	82.074
07/24/02	13:49:06	83.183
07/24/02	13:50:06	81.761
07/24/02	13:51:06	82.871
07/24/02	13:52:06	37.454
07/24/02	13:53:06	-0.370
07/24/02	13:54:06	-0.427
07/24/02	13:55:06	-0.370
07/24/02	13:56:06	-0.370
07/24/02	13:57:06	-0.370

1101 Highway 80 - No. 7556 cont.

Date	Time	Pres (PSI)
07/24/02	13:58:06	-0.370
07/24/02	13:59:06	-0.370
07/24/02	14:00:06	-0.313
07/24/02	14:01:06	-0.370
07/24/02	14:02:06	-0.313
07/24/02	14:03:06	-0.313
07/24/02	14:04:06	-0.370
07/24/02	14:05:06	-0.427
07/24/02	14:06:06	-0.370
07/24/02	14:07:06	-0.370
07/24/02	14:08:06	-0.370
07/24/02	14:09:06	-0.313
07/24/02	14:10:06	-0.313
07/24/02	14:11:06	-0.313
07/24/02	14:12:06	-0.313
07/24/02	14:13:06	-0.313
07/24/02	14:14:06	-0.313
07/24/02	14:15:06	-0.313
07/24/02	14:16:06	-0.313
07/24/02	14:17:06	-0.313
07/24/02	14:18:06	-0.313
07/24/02	14:19:06	-0.313
07/24/02	14:20:06	-0.313
07/24/02	14:21:06	-0.284
07/24/02	14:22:06	-0.313
07/24/02	14:23:06	-0.284
07/24/02	14:24:06	-0.284
07/24/02	14:25:06	-0.284
07/24/02	14:26:06	-0.313
07/24/02	14:27:06	-0.284
07/24/02	14:28:06	-0.313
07/24/02	14:29:06	-0.284
07/24/02	14:30:06	-0.284
07/24/02	14:31:06	-0.284
07/24/02	14:32:06	-0.313
07/24/02	14:33:06	-0.313
07/24/02	14:34:06	-0.313
07/24/02	14:35:06	-0.284
07/24/02	14:36:06	-0.370
07/24/02	14:37:06	-0.313
07/24/02	14:38:06	-0.313
07/24/02	14:39:06	-0.313
07/24/02	14:40:06	-0.370
07/24/02	14:41:06	-0.370
07/24/02	14:42:06	-0.313
07/24/02	14:43:06	-0.370
07/24/02	14:44:06	-0.370
07/24/02	14:45:06	-0.313
07/24/02	14:46:06	-0.370
07/24/02	14:47:06	-0.313
07/24/02	14:48:06	-0.370
07/24/02	14:49:06	-0.313
07/24/02	14:50:06	-0.370
07/24/02	14:51:06	-0.370
07/24/02	14:52:06	-0.370
07/24/02	14:53:06	-0.370
07/24/02	14:54:06	-0.370
07/24/02	14:55:06	-0.313
07/24/02	14:56:06	-0.370
07/24/02	14:57:06	-0.313
07/24/02	14:58:06	-0.313
07/24/02	14:59:06	-0.284
07/24/02	15:00:06	-0.370
07/24/02	15:01:06	-0.370
07/24/02	15:02:06	-0.284
07/24/02	15:03:06	-0.284
07/24/02	15:04:06	-0.313
07/24/02	15:05:06	-0.284
07/24/02	15:06:06	-0.313
07/24/02	15:07:06	-0.284
07/24/02	15:08:06	-0.284
07/24/02	15:09:06	-0.228
07/24/02	15:10:06	-0.228
07/24/02	15:11:06	-0.228
07/24/02	15:12:06	-0.284
07/24/02	15:13:06	-0.228
07/24/02	15:14:06	-0.228
07/24/02	15:15:06	-0.284
07/24/02	15:16:06	-0.284
07/24/02	15:17:06	-0.228
07/24/02	15:18:06	-0.284
07/24/02	15:19:06	-0.284
07/24/02	15:20:06	-0.284
07/24/02	15:21:06	-0.228
07/24/02	15:22:06	-0.228
07/24/02	15:23:06	-0.228
07/24/02	15:24:06	-0.284
07/24/02	15:25:06	-0.284
07/24/02	15:26:06	-0.284
07/24/02	15:27:06	-0.284
07/24/02	15:28:06	-0.284
07/24/02	15:29:06	-0.284
07/24/02	15:30:06	-0.284
07/24/02	15:31:06	-0.284
07/24/02	15:32:06	-0.313
07/24/02	15:33:06	-0.284
07/24/02	15:34:06	-0.284
07/24/02	15:35:06	-0.284
07/24/02	15:36:06	-0.313
07/24/02	15:37:06	-0.284

755 RIVER RD. - NO. 7555

Date	Time	Pres (PSI)	Date	Time	Pres (PSI)	Date	Time	Pres (PSI)	Date	Time	Pres (PSI
07/22/02	12:38:13	-0.085	07/22/02	13:44:13	85.487	07/22/02	14:50:13	83.667	07/22/02	15:56:13	89.099
07/22/02	12:39:13	-0.085	07/22/02	13:45:13	88.843	07/22/02	14:51:13	82.785	07/22/02	15:57:13	87.904
07/22/02	12:40:13	-0.085	07/22/02	13:46:13	89.554	07/22/02	14:52:13	83.980	07/22/02	15:58:13	88.786
07/22/02	12:41:13	-0.142	07/22/02	13:47:13	86.966	07/22/02	14:53:13	83.667	07/22/02	15:59:13	85.686
07/22/02	12:42:13	-0.085	07/22/02	13:48:13	84.349	07/22/02	14:54:13	83.724	07/22/02	16:00:13	88.359
07/22/02	12:43:13	-0.085	07/22/02	13:49:13	87.193	07/22/02	14:55:13	83.923	07/22/02	16:01:13	87.961
07/22/02	12:44:13	-0.085	07/22/02	13:50:13	88.644	07/22/02	14:56:13	83.866	07/22/02	16:02:13	86.880
07/22/02	12:45:13	-0.085	07/22/02	13:51:13	87.790	07/22/02	14:57:13	83.354	07/22/02	16:03:13	87.961
07/22/02	12:46:13	-0.085	07/22/02	13:52:13	88.530	07/22/02	14:58:13	84.662	07/22/02	16:04:13	85.629
07/22/02	12:47:13	-0.142	07/22/02	13:53:13	84.236	07/22/02	14:59:13	83.041	07/22/02	16:05:13	87.961
07/22/02	12:48:13	-0.142	07/22/02	13:54:13	85.259	07/22/02	15:00:13	84.292	07/22/02	16:06:13	85.487
07/22/02	12:49:13	-0.142	07/22/02	13:55:13	84.492	07/22/02	15:01:13	84.179	07/22/02	16:07:13	88.587
07/22/02	12:50:13	-0.085	07/22/02	13:56:13	85.117	07/22/02	15:02:13	80.453	07/22/02	16:08:13	87.762
07/22/02	12:51:13	-0.142	07/22/02	13:57:13	82.785	07/22/02	15:03:13	85.572	07/22/02	16:09:13	88.103
07/22/02	12:52:13	-0.142	07/22/02	13:58:13	87.335	07/22/02	15:04:13	88.928	07/22/02	16:10:13	88.075
07/22/02	12:53:13	-0.199	07/22/02	13:59:13	87.847	07/22/02	15:05:13	83.212	07/22/02	16:11:13	86.624
07/22/02	12:54:13	-0.199	07/22/02	14:00:13	88.530	07/22/02	15:06:13	82.956	07/22/02	16:12:13	86.937
07/22/02	12:55:13	-0.199	07/22/02	14:01:13	87.222	07/22/02	15:07:13	84.378	07/22/02	16:13:13	87.222
07/22/02	12:56:13	-0.142	07/22/02	14:02:13	87.335	07/22/02	15:08:13	85.743	07/22/02	16:14:13	84.662
07/22/02	12:57:13	-0.142	07/22/02	14:03:13	88.103	07/22/02	15:09:13	85.373	07/22/02	16:15:13	84.947
07/22/02	12:58:13	-0.199	07/22/02	14:04:13	73.372	07/22/02	15:10:13	84.548	07/22/02	16:16:13	86.767
07/22/02	12:59:13	-0.199	07/22/02	14:05:13	74.367	07/22/02	15:11:13	85.003	07/22/02	16:17:13	85.629
07/22/02	13:00:13	-0.142	07/22/02	14:06:13	77.154	07/22/02	15:12:13	85.828	07/22/02	16:18:13	84.349
07/22/02	13:01:13	-0.142	07/22/02	14:07:13	77.581	07/22/02	15:13:13	83.923	07/22/02	16:19:13	88.786
07/22/02	13:02:13	-0.199	07/22/02	14:08:13	78.235	07/22/02	15:14:13	83.525	07/22/02	16:20:13	85.828
07/22/02	13:03:13	-0.199	07/22/02	14:09:13	77.723	07/22/02	15:15:13	85.487	07/22/02	16:21:13	87.790
07/22/02	13:04:13	-0.142	07/22/02	14:10:13	87.705	07/22/02	15:16:13	84.037	07/22/02	16:22:13	87.961
07/22/02	13:05:13	-0.199	07/22/02	14:11:13	88.331	07/22/02	15:17:13	83.468	07/22/02	16:23:13	85.629
07/22/02	13:06:13	-0.199	07/22/02	14:12:13	86.255	07/22/02	15:18:13	85.316	07/22/02	16:24:13	87.790
07/22/02	13:07:13	-0.199	07/22/02	14:13:13	85.885	07/22/02	15:19:13	83.724	07/22/02	16:25:13	88.075
07/22/02	13:08:13	-0.199	07/22/02	14:14:13	85.828	07/22/02	15:20:13	86.454	07/22/02	16:26:13	86.568
07/22/02	13:09:13	-0.199	07/22/02	14:15:13	88.331	07/22/02	15:21:13	84.548	07/22/02	16:27:13	88.018
07/22/02	13:10:13	-0.142	07/22/02	14:16:13	87.335	07/22/02	15:22:13	84.605	07/22/02	16:28:13	86.624
07/22/02	13:11:13	-0.142	07/22/02	14:17:13	85.828	07/22/02	15:23:13	86.454	07/22/02	16:29:13	86.880
07/22/02	13:12:13	-0.199	07/22/02	14:18:13	85.487	07/22/02	15:24:13	83.468	07/22/02	16:30:13	86.767
07/22/02	13:13:13	-0.142	07/22/02	14:19:13	86.624	07/22/02	15:25:13	85.003	07/22/02	16:31:13	87.790
07/22/02	13:14:13	-0.199	07/22/02	14:20:13	87.079	07/22/02	15:26:13	83.809	07/22/02	16:32:13	84.804
07/22/02	13:15:13	-0.199	07/22/02	14:21:13	85.231	07/22/02	15:27:13	84.918	07/22/02	16:33:13	87.762
07/22/02	13:16:13	-0.142	07/22/02	14:22:13	85.231	07/22/02	15:28:13	84.037	07/22/02	16:34:13	84.804
07/22/02	13:17:13	-0.142	07/22/02	14:23:13	86.824	07/22/02	15:29:13	85.117	07/22/02	16:35:13	88.018
07/22/02	13:18:13	-0.142	07/22/02	14:24:13	84.861	07/22/02	15:30:13	83.411	07/22/02	16:36:13	86.710
07/22/02	13:19:13	-0.142	07/22/02	14:25:13	85.231	07/22/02	15:31:13	83.809	07/22/02	16:37:13	86.454
07/22/02	13:20:13	-0.199	07/22/02	14:26:13	87.193	07/22/02	15:32:13	83.667	07/22/02	16:38:13	86.454
07/22/02	13:21:13	-0.142	07/22/02	14:27:13	87.648	07/22/02	15:33:13	85.743	07/22/02	16:39:13	86.454
07/22/02	13:22:13	-0.199	07/22/02	14:28:13	87.847	07/22/02	15:34:13	82.956	07/22/02	16:40:13	85.572
07/22/02	13:23:13	-0.199	07/22/02	14:29:13	86.824	07/22/02	15:35:13	86.568	07/22/02	16:41:13	88.928
07/22/02	13:24:13	-0.142	07/22/02	14:30:13	85.885	07/22/02	15:36:13	84.918	07/22/02	16:42:13	86.511
07/22/02	13:25:13	-0.199	07/22/02	14:31:13	87.762	07/22/02	15:37:13	85.003	07/22/02	16:43:13	88.018
07/22/02	13:26:13	-0.199	07/22/02	14:32:13	82.472	07/22/02	15:38:13	86.880	07/22/02	16:44:13	87.591
07/22/02	13:27:13	-0.142	07/22/02	14:33:13	83.809	07/22/02	15:39:13	85.686	07/22/02	16:45:13	88.274
07/22/02	13:28:13	-0.199	07/22/02	14:34:13	83.724	07/22/02	15:40:13	85.572	07/22/02	16:46:13	88.331
07/22/02	13:29:13	-0.199	07/22/02	14:35:13	84.093	07/22/02	15:41:13	86.824	07/22/02	16:47:13	86.937
07/22/02	13:30:13	-0.199	07/22/02	14:36:13	83.809	07/22/02	15:42:13	84.804	07/22/02	16:48:13	85.828
07/22/02	13:31:13	-0.199	07/22/02	14:37:13	84.349	07/22/02	15:43:13	86.624	07/22/02	16:49:13	89.042
07/22/02	13:32:13	-0.142	07/22/02	14:38:13	83.297	07/22/02	15:44:13	85.259	07/22/02	16:50:13	87.762
07/22/02	13:33:13	-0.142	07/22/02	14:39:13	84.861	07/22/02	15:45:13	90.236	07/22/02	16:51:13	86.710
07/22/02	13:34:13	-0.142	07/22/02	14:40:13	83.553	07/22/02	15:46:13	88.928	07/22/02	16:52:13	87.335
07/22/02	13:35:13	-0.199	07/22/02	14:41:13	83.667	07/22/02	15:47:13	88.786	07/22/02	16:53:13	85.117
07/22/02	13:36:13	-0.199	07/22/02	14:42:13	83.468	07/22/02	15:48:13	89.980	07/22/02	16:54:13	84.662
07/22/02	13:37:13	-0.199	07/22/02	14:43:13	82.216	07/22/02	15:49:13	91.999	07/22/02	16:55:13	87.961
07/22/02	13:38:13	-0.142	07/22/02	14:44:13	83.553	07/22/02	15:50:13	90.748	07/22/02	16:56:13	86.937
07/22/02	13:39:13	-0.199	07/22/02	14:45:13	82.216	07/22/02	15:51:13	90.549	07/22/02	16:57:13	85.316
07/22/02	13:40:13	-0.199	07/22/02	14:46:13	82.899	07/22/02	15:52:13	88.672	07/22/02	16:58:13	85.686
07/22/02	13:41:13	55.598	07/22/02	14:47:13	83.610	07/22/02	15:53:13	89.042	07/22/02	16:59:13	85.174
07/22/02	13:42:13	86.824	07/22/02	14:48:13	83.098	07/22/02	15:54:13	88.530	07/22/02	17:00:13	85.515
07/22/02	13:43:13	87.079	07/22/02	14:49:13	83.041	07/22/02	15:55:13	87.705	07/22/02	17:01:13	85.999

755 RIVER RD. - NO. 7555 cont.

Date	Time	Pres (PSI)
07/22/02	17:02:13	84.691
07/22/02	17:03:13	86.056
07/22/02	17:04:13	85.885
07/22/02	17:05:13	87.335
07/22/02	17:06:13	85.800
07/22/02	17:07:13	85.686
07/22/02	17:08:13	85.629
07/22/02	17:09:13	86.198
07/22/02	17:10:13	86.653
07/22/02	17:11:13	87.961
07/22/02	17:12:13	85.629
07/22/02	17:13:13	85.430
07/22/02	17:14:13	86.312
07/22/02	17:15:13	84.861
07/22/02	17:16:13	84.947
07/22/02	17:17:13	86.369
07/22/02	17:18:13	87.790
07/22/02	17:19:13	87.193
07/22/02	17:20:13	86.198
07/22/02	17:21:13	85.800
07/22/02	17:22:13	87.449
07/22/02	17:23:13	88.160
07/22/02	17:24:13	85.743
07/22/02	17:25:13	88.587
07/22/02	17:26:13	88.359
07/22/02	17:27:13	87.506
07/22/02	17:28:13	87.449
07/22/02	17:29:13	88.075
07/22/02	17:30:13	86.966
07/22/02	17:31:13	86.767
07/22/02	17:32:13	87.535
07/22/02	17:33:13	88.416
07/22/02	17:34:13	87.222
07/22/02	17:35:13	86.369
07/22/02	17:36:13	86.710
07/22/02	17:37:13	86.653
07/22/02	17:38:13	87.705
07/22/02	17:39:13	85.373
07/22/02	17:40:13	86.767
07/22/02	17:41:13	86.653
07/22/02	17:42:13	86.369
07/22/02	17:43:13	87.136
07/22/02	17:44:13	85.487
07/22/02	17:45:13	85.686
07/22/02	17:46:13	87.506
07/22/02	17:47:13	87.222
07/22/02	17:48:13	85.885
07/22/02	17:49:13	87.705
07/22/02	17:50:13	87.136
07/22/02	17:51:13	85.942
07/22/02	17:52:13	87.705
07/22/02	17:53:13	86.767
07/22/02	17:54:13	85.515
07/22/02	17:55:13	85.743
07/22/02	17:56:13	85.003
07/22/02	17:57:13	86.084
07/22/02	17:58:13	84.748
07/22/02	17:59:13	85.828
07/22/02	18:00:13	84.435
07/22/02	18:01:13	84.179
07/22/02	18:02:13	84.548
07/22/02	18:03:13	86.084
07/22/02	18:04:13	83.468
07/22/02	18:05:13	84.861
07/22/02	18:06:13	85.942
07/22/02	18:07:13	85.060

Date	Time	Pres (PSI)
07/22/02	18:08:13	86.397
07/22/02	18:09:13	86.880
07/22/02	18:10:13	86.397
07/22/02	18:11:13	85.174
07/22/02	18:12:13	82.984
07/22/02	18:13:13	85.885
07/22/02	18:14:13	86.568
07/22/02	18:15:13	86.255
07/22/02	18:16:13	87.847
07/22/02	18:17:13	85.743
07/22/02	18:18:13	85.800
07/22/02	18:19:13	85.942
07/22/02	18:20:13	85.800
07/22/02	18:21:13	85.316
07/22/02	18:22:13	86.255
07/22/02	18:23:13	88.473
07/22/02	18:24:13	87.023
07/22/02	18:25:13	85.060
07/22/02	18:26:13	84.662
07/22/02	18:27:13	86.568
07/22/02	18:28:13	88.103
07/22/02	18:29:13	85.515
07/22/02	18:30:13	86.141
07/22/02	18:31:13	86.937
07/22/02	18:32:13	87.904
07/22/02	18:33:13	84.804
07/22/02	18:34:13	87.335
07/22/02	18:35:13	67.030
07/22/02	18:36:13	71.637
07/22/02	18:37:13	72.974
07/22/02	18:38:13	73.486
07/22/02	18:39:13	71.211
07/22/02	18:40:13	72.547
07/22/02	18:41:13	83.553
07/22/02	18:42:13	86.397
07/22/02	18:43:13	85.942
07/22/02	18:44:13	86.653
07/22/02	18:45:13	86.084
07/22/02	18:46:13	85.003
07/22/02	18:47:13	84.093
07/22/02	18:48:13	83.667
07/22/02	18:49:13	84.122
07/22/02	18:50:13	83.923
07/22/02	18:51:13	82.700
07/22/02	18:52:13	84.748
07/22/02	18:53:13	83.297
07/22/02	18:54:13	81.818
07/22/02	18:55:13	83.923
07/22/02	18:56:13	84.292
07/22/02	18:57:13	81.648
07/22/02	18:58:13	83.809
07/22/02	18:59:13	80.311
07/22/02	19:00:13	82.586
07/22/02	19:01:13	82.160
07/22/02	19:02:13	83.269
07/22/02	19:03:13	81.648
07/22/02	19:04:13	82.416
07/22/02	19:05:13	81.278
07/22/02	19:06:13	81.904
07/22/02	19:07:13	81.818
07/22/02	19:08:13	83.212
07/22/02	19:09:13	82.330
07/22/02	19:10:13	87.506
07/22/02	19:11:13	87.961
07/22/02	19:12:13	83.297
07/22/02	19:13:13	86.369

Date	Time	Pres (PSI)
07/22/02	19:14:13	86.710
07/22/02	19:15:13	85.828
07/22/02	19:16:13	86.312
07/22/02	19:17:13	85.999
07/22/02	19:18:13	85.999
07/22/02	19:19:13	86.056
07/22/02	19:20:13	83.610
07/22/02	19:21:13	85.828
07/22/02	19:22:13	85.316
07/22/02	19:23:13	85.174
07/22/02	19:24:13	85.629
07/22/02	19:25:13	84.804
07/22/02	19:26:13	86.966
07/22/02	19:27:13	85.231
07/22/02	19:28:13	85.629
07/22/02	19:29:13	84.691
07/22/02	19:30:13	86.624
07/22/02	19:31:13	86.056
07/22/02	19:32:13	86.255
07/22/02	19:33:13	84.947
07/22/02	19:34:13	85.316
07/22/02	19:35:13	85.629
07/22/02	19:36:13	85.060
07/22/02	19:37:13	85.629
07/22/02	19:38:13	87.136
07/22/02	19:39:13	85.174
07/22/02	19:40:13	84.804
07/22/02	19:41:13	86.141
07/22/02	19:42:13	83.041
07/22/02	19:43:13	87.648
07/22/02	19:44:13	85.515
07/22/02	19:45:13	86.710
07/22/02	19:46:13	85.231
07/22/02	19:47:13	86.880
07/22/02	19:48:13	85.316
07/22/02	19:49:13	85.686
07/22/02	19:50:13	86.568
07/22/02	19:51:13	86.198
07/22/02	19:52:13	85.885
07/22/02	19:53:13	84.947
07/22/02	19:54:13	85.515
07/22/02	19:55:13	86.369
07/22/02	19:56:13	85.430
07/22/02	19:57:13	84.662
07/22/02	19:58:13	86.397
07/22/02	19:59:13	85.629
07/22/02	20:00:13	85.800
07/22/02	20:01:13	85.430
07/22/02	20:02:13	87.449
07/22/02	20:03:13	86.255
07/22/02	20:04:13	85.686
07/22/02	20:05:13	86.511
07/22/02	20:06:13	85.743
07/22/02	20:07:13	86.141
07/22/02	20:08:13	84.548
07/22/02	20:09:13	84.122
07/22/02	20:10:13	86.824
07/22/02	20:11:13	83.866
07/22/02	20:12:13	87.335
07/22/02	20:13:13	85.743
07/22/02	20:14:13	84.548
07/22/02	20:15:13	84.691
07/22/02	20:16:13	85.487
07/22/02	20:17:13	84.093
07/22/02	20:18:13	85.373
07/22/02	20:19:13	87.222

Date	Time	Pres (PSI
07/22/02	20:20:13	87.023
07/22/02	20:21:13	86.255
07/22/02	20:22:13	85.117
07/22/02	20:23:13	86.454
07/22/02	20:24:13	85.572
07/22/02	20:25:13	85.572
07/22/02	20:26:13	85.828
07/22/02	20:27:13	85.430
07/22/02	20:28:13	85.885
07/22/02	20:29:13	87.449
07/22/02	20:30:13	85.942
07/22/02	20:31:13	85.743
07/22/02	20:32:13	85.060
07/22/02	20:33:13	84.378
07/22/02	20:34:13	86.056
07/22/02	20:35:13	85.942
07/22/02	20:36:13	87.136
07/22/02	20:37:13	84.179
07/22/02	20:38:13	86.624
07/22/02	20:39:13	86.397
07/22/02	20:40:13	85.885
07/22/02	20:41:13	85.316
07/22/02	20:42:13	85.800
07/22/02	20:43:13	86.624
07/22/02	20:44:13	86.937
07/22/02	20:45:13	85.174
07/22/02	20:46:13	85.373
07/22/02	20:47:13	85.743
07/22/02	20:48:13	86.369
07/22/02	20:49:13	86.369
07/22/02	20:50:13	87.079
07/22/02	20:51:13	85.942
07/22/02	20:52:13	86.255
07/22/02	20:53:13	85.686
07/22/02	20:54:13	87.904
07/22/02	20:55:13	87.279
07/22/02	20:56:13	87.079
07/22/02	20:57:13	87.335
07/22/02	20:58:13	86.710
07/22/02	20:59:13	88.160
07/22/02	21:00:13	86.937
07/22/02	21:01:13	84.947
07/22/02	21:02:13	85.373
07/22/02	21:03:13	84.435
07/22/02	21:04:13	84.947
07/22/02	21:05:13	87.392
07/22/02	21:06:13	86.966
07/22/02	21:07:13	85.686
07/22/02	21:08:13	86.511
07/22/02	21:09:13	86.824
07/22/02	21:10:13	86.141
07/22/02	21:11:13	84.548
07/22/02	21:12:13	85.572
07/22/02	21:13:13	86.937
07/22/02	21:14:13	85.231
07/22/02	21:15:13	86.454
07/22/02	21:16:13	85.885
07/22/02	21:17:13	85.828
07/22/02	21:18:13	86.966
07/22/02	21:19:13	86.568
07/22/02	21:20:13	86.880
07/22/02	21:21:13	86.937
07/22/02	21:22:13	86.056
07/22/02	21:23:13	87.449
07/22/02	21:24:13	87.705
07/22/02	21:25:13	88.359

755 RIVER RD. - NO. 7555 cont.

Date	Time	Pres (PSI)
07/22/02	21:26:13	86.511
07/22/02	21:27:13	87.392
07/22/02	21:28:13	86.312
07/22/02	21:29:13	87.079
07/22/02	21:30:13	87.648
07/22/02	21:31:13	86.454
07/22/02	21:32:13	86.568
07/22/02	21:33:13	88.075
07/22/02	21:34:13	86.198
07/22/02	21:35:13	85.800
07/22/02	21:36:13	87.392
07/22/02	21:37:13	86.198
07/22/02	21:38:13	86.511
07/22/02	21:39:13	85.743
07/22/02	21:40:13	86.511
07/22/02	21:41:13	87.279
07/22/02	21:42:13	86.767
07/22/02	21:43:13	88.160
07/22/02	21:44:13	88.416
07/22/02	21:45:13	86.767
07/22/02	21:46:13	86.710
07/22/02	21:47:13	85.828
07/22/02	21:48:13	87.335
07/22/02	21:49:13	88.274
07/22/02	21:50:13	88.587
07/22/02	21:51:13	88.644
07/22/02	21:52:13	88.928
07/22/02	21:53:13	88.900
07/22/02	21:54:13	89.411
07/22/02	21:55:13	88.359
07/22/02	21:56:13	88.416
07/22/02	21:57:13	90.322
07/22/02	21:58:13	89.298
07/22/02	21:59:13	89.667
07/22/02	22:00:13	87.961
07/22/02	22:01:13	85.885
07/22/02	22:02:13	86.880
07/22/02	22:03:13	87.136
07/22/02	22:04:13	88.274
07/22/02	22:05:13	75.078
07/22/02	22:06:13	70.386
07/22/02	22:07:13	72.718
07/22/02	22:08:13	83.098
07/22/02	22:09:13	87.961
07/22/02	22:10:13	84.179
07/22/02	22:11:13	85.885
07/22/02	22:12:13	85.686
07/22/02	22:13:13	85.259
07/22/02	22:14:13	85.942
07/22/02	22:15:13	84.662
07/22/02	22:16:13	84.918
07/22/02	22:17:13	85.828
07/22/02	22:18:13	85.629
07/22/02	22:19:13	88.672
07/22/02	22:20:13	86.369
07/22/02	22:21:13	86.767
07/22/02	22:22:13	87.222
07/22/02	22:23:13	87.279
07/22/02	22:24:13	87.705
07/22/02	22:25:13	87.506
07/22/02	22:26:13	89.212
07/22/02	22:27:13	88.103
07/22/02	22:28:13	87.961
07/22/02	22:29:13	88.729
07/22/02	22:30:13	88.075
07/22/02	22:31:13	87.506

Date	Time	Pres (PSI)
07/22/02	22:32:13	87.535
07/22/02	22:33:13	87.904
07/22/02	22:34:13	90.293
07/22/02	22:35:13	89.355
07/22/02	22:36:13	88.672
07/22/02	22:37:13	90.322
07/22/02	22:38:13	89.724
07/22/02	22:39:13	89.042
07/22/02	22:40:13	89.810
07/22/02	22:41:13	90.435
07/22/02	22:42:13	90.179
07/22/02	22:43:13	88.900
07/22/02	22:44:13	90.549
07/22/02	22:45:13	87.762
07/22/02	22:46:13	89.866
07/22/02	22:47:13	89.866
07/22/02	22:48:13	90.492
07/22/02	22:49:13	90.862
07/22/02	22:50:13	89.810
07/22/02	22:51:13	89.554
07/22/02	22:52:13	91.118
07/22/02	22:53:13	77.524
07/22/02	22:54:13	74.879
07/22/02	22:55:13	78.292
07/22/02	22:56:13	77.780
07/22/02	22:57:13	77.353
07/22/02	22:58:13	77.012
07/22/02	22:59:13	84.435
07/22/02	23:00:13	89.355
07/22/02	23:01:13	87.449
07/22/02	23:02:13	86.141
07/22/02	23:03:13	86.369
07/22/02	23:04:13	86.767
07/22/02	23:05:13	87.023
07/22/02	23:06:13	86.084
07/22/02	23:07:13	85.828
07/22/02	23:08:13	85.572
07/22/02	23:09:13	86.141
07/22/02	23:10:13	85.629
07/22/02	23:11:13	86.767
07/22/02	23:12:13	86.966
07/22/02	23:13:13	87.449
07/22/02	23:14:13	86.369
07/22/02	23:15:13	85.942
07/22/02	23:16:13	87.506
07/22/02	23:17:13	87.705
07/22/02	23:18:13	87.705
07/22/02	23:19:13	86.511
07/22/02	23:20:13	86.397
07/22/02	23:21:13	86.653
07/22/02	23:22:13	87.449
07/22/02	23:23:13	86.880
07/22/02	23:24:13	87.023
07/22/02	23:25:13	87.506
07/22/02	23:26:13	87.079
07/22/02	23:27:13	86.966
07/22/02	23:28:13	87.335
07/22/02	23:29:13	87.591
07/22/02	23:30:13	85.800
07/22/02	23:31:13	87.279
07/22/02	23:32:13	86.312
07/22/02	23:33:13	87.136
07/22/02	23:34:13	86.141
07/22/02	23:35:13	86.880
07/22/02	23:36:13	93.905
07/22/02	23:37:13	85.743

Date	Time	Pres (PSI)
07/22/02	23:38:13	90.606
07/22/02	23:39:13	90.122
07/22/02	23:40:13	89.866
07/22/02	23:41:13	89.810
07/22/02	23:42:13	90.634
07/22/02	23:43:13	89.298
07/22/02	23:44:13	88.359
07/22/02	23:45:13	91.004
07/22/02	23:46:13	90.805
07/22/02	23:47:13	91.118
07/22/02	23:48:13	90.037
07/22/02	23:49:13	90.122
07/22/02	23:50:13	90.378
07/22/02	23:51:13	90.890
07/22/02	23:52:13	90.890
07/22/02	23:53:13	90.122
07/22/02	23:54:13	91.118
07/22/02	23:55:13	90.066
07/22/02	23:56:13	90.066
07/22/02	23:57:13	91.374
07/22/02	23:58:13	91.061
07/22/02	23:59:13	90.748
07/23/02	00:00:13	90.691
07/23/02	00:01:13	89.554
07/23/02	00:02:13	91.431
07/23/02	00:03:13	91.118
07/23/02	00:04:13	91.260
07/23/02	00:05:13	91.431
07/23/02	00:06:13	90.322
07/23/02	00:07:13	90.805
07/23/02	00:08:13	90.492
07/23/02	00:09:13	91.061
07/23/02	00:10:13	90.549
07/23/02	00:11:13	95.412
07/23/02	00:12:13	93.222
07/23/02	00:13:13	92.454
07/23/02	00:14:13	93.535
07/23/02	00:15:13	92.966
07/23/02	00:16:13	93.023
07/23/02	00:17:13	92.881
07/23/02	00:18:13	93.080
07/23/02	00:19:13	93.450
07/23/02	00:20:13	91.999
07/23/02	00:21:13	93.336
07/23/02	00:22:13	93.450
07/23/02	00:23:13	93.080
07/23/02	00:24:13	92.653
07/23/02	00:25:13	92.881
07/23/02	00:26:13	92.568
07/23/02	00:27:13	93.279
07/23/02	00:28:13	93.080
07/23/02	00:29:13	92.710
07/23/02	00:30:13	93.336
07/23/02	00:31:13	93.649
07/23/02	00:32:13	92.255
07/23/02	00:33:13	92.767
07/23/02	00:34:13	93.279
07/23/02	00:35:13	93.279
07/23/02	00:36:13	93.393
07/23/02	00:37:13	93.450
07/23/02	00:38:13	92.341
07/23/02	00:39:13	94.417
07/23/02	00:40:13	93.279
07/23/02	00:41:13	92.710
07/23/02	00:42:13	94.303
07/23/02	00:43:13	92.710

Date	Time	Pres (PSI
07/23/02	00:44:13	93.336
07/23/02	00:45:13	94.274
07/23/02	00:46:13	93.649
07/23/02	00:47:13	94.019
07/23/02	00:48:13	93.450
07/23/02	00:49:13	93.905
07/23/02	00:50:13	94.104
07/23/02	00:51:13	93.080
07/23/02	00:52:13	93.734
07/23/02	00:53:13	92.966
07/23/02	00:54:13	93.450
07/23/02	00:55:13	93.962
07/23/02	00:56:13	94.047
07/23/02	00:57:13	93.535
07/23/02	00:58:13	91.431
07/23/02	00:59:13	92.909
07/23/02	01:00:13	93.222
07/23/02	01:01:13	92.966
07/23/02	01:02:13	92.511
07/23/02	01:03:13	93.222
07/23/02	01:04:13	93.478
07/23/02	01:05:13	93.791
07/23/02	01:06:13	94.474
07/23/02	01:07:13	92.653
07/23/02	01:08:13	92.710
07/23/02	01:09:13	92.398
07/23/02	01:10:13	93.592
07/23/02	01:11:13	91.317
07/23/02	01:12:13	90.236
07/23/02	01:13:13	87.449
07/23/02	01:14:13	96.066
07/23/02	01:15:13	92.511
07/23/02	01:16:13	91.829
07/23/02	01:17:13	92.653
07/23/02	01:18:13	93.023
07/23/02	01:19:13	92.312
07/23/02	01:20:13	93.592
07/23/02	01:21:13	93.791
07/23/02	01:22:13	92.710
07/23/02	01:23:13	93.478
07/23/02	01:24:13	93.080
07/23/02	01:25:13	93.080
07/23/02	01:26:13	92.710
07/23/02	01:27:13	93.165
07/23/02	01:28:13	93.279
07/23/02	01:29:13	92.824
07/23/02	01:30:13	93.279
07/23/02	01:31:13	92.511
07/23/02	01:32:13	92.909
07/23/02	01:33:13	94.530
07/23/02	01:34:13	93.592
07/23/02	01:35:13	92.824
07/23/02	01:36:13	93.393
07/23/02	01:37:13	93.080
07/23/02	01:38:13	93.279
07/23/02	01:39:13	93.165
07/23/02	01:40:13	93.734
07/23/02	01:41:13	93.905
07/23/02	01:42:13	94.047
07/23/02	01:43:13	94.019
07/23/02	01:44:13	93.962
07/23/02	01:45:13	93.222
07/23/02	01:46:13	93.791
07/23/02	01:47:13	94.104
07/23/02	01:48:13	92.597
07/23/02	01:49:13	94.218

755 RIVER RD. - NO. 7555 cont.

Date Time	Pres (PSI)	Date Time	Pres (PSI)	Date Time	Pres (PSI)	Date Time	Pres (PSI
07/23/02 01:50:13	94.360	07/23/02 02:56:13	93.393	07/23/02 04:02:13	92.653	07/23/02 05:08:13	88.018
07/23/02 01:51:13	93.649	07/23/02 02:57:13	93.279	07/23/02 04:03:13	94.047	07/23/02 05:09:13	87.705
07/23/02 01:52:13	94.218	07/23/02 02:58:13	92.710	07/23/02 04:04:13	93.649	07/23/02 05:10:13	87.591
07/23/02 01:53:13	94.673	07/23/02 02:59:13	93.165	07/23/02 04:05:13	92.881	07/23/02 05:11:13	88.075
07/23/02 01:54:13	94.843	07/23/02 03:00:13	93.450	07/23/02 04:06:13	93.023	07/23/02 05:12:13	87.535
07/23/02 01:55:13	93.848	07/23/02 03:01:13	93.137	07/23/02 04:07:13	93.222	07/23/02 05:13:13	87.591
07/23/02 01:56:13	94.161	07/23/02 03:02:13	92.767	07/23/02 04:08:13	93.279	07/23/02 05:14:13	88.530
07/23/02 01:57:13	94.360	07/23/02 03:03:13	93.222	07/23/02 04:09:13	92.767	07/23/02 05:15:13	87.790
07/23/02 01:58:13	93.450	07/23/02 03:04:13	92.568	07/23/02 04:10:13	92.966	07/23/02 05:16:13	87.705
07/23/02 01:59:13	93.535	07/23/02 03:05:13	94.019	07/23/02 04:11:13	93.791	07/23/02 05:17:13	87.847
07/23/02 02:00:13	93.706	07/23/02 03:06:13	93.393	07/23/02 04:12:13	92.881	07/23/02 05:18:13	88.416
07/23/02 02:01:13	94.104	07/23/02 03:07:13	92.767	07/23/02 04:13:13	93.336	07/23/02 05:19:13	88.274
07/23/02 02:02:13	94.161	07/23/02 03:08:13	92.966	07/23/02 04:14:13	93.535	07/23/02 05:20:13	87.847
07/23/02 02:03:13	94.673	07/23/02 03:09:13	93.535	07/23/02 04:15:13	94.047	07/23/02 05:21:13	88.075
07/23/02 02:04:13	94.104	07/23/02 03:10:13	93.734	07/23/02 04:16:13	93.706	07/23/02 05:22:13	87.648
07/23/02 02:05:13	93.791	07/23/02 03:11:13	93.649	07/23/02 04:17:13	93.279	07/23/02 05:23:13	87.535
07/23/02 02:06:13	93.393	07/23/02 03:12:13	93.848	07/23/02 04:18:13	93.080	07/23/02 05:24:13	88.644
07/23/02 02:07:13	93.791	07/23/02 03:13:13	93.080	07/23/02 04:19:13	93.478	07/23/02 05:25:13	87.705
07/23/02 02:08:13	94.786	07/23/02 03:14:13	94.274	07/23/02 04:20:13	92.966	07/23/02 05:26:13	86.568
07/23/02 02:09:13	93.450	07/23/02 03:15:13	93.592	07/23/02 04:21:13	93.478	07/23/02 05:27:13	85.231
07/23/02 02:10:13	94.019	07/23/02 03:16:13	93.165	07/23/02 04:22:13	93.165	07/23/02 05:28:13	86.397
07/23/02 02:11:13	93.478	07/23/02 03:17:13	93.023	07/23/02 04:23:13	93.734	07/23/02 05:29:13	86.397
07/23/02 02:12:13	93.478	07/23/02 03:18:13	93.137	07/23/02 04:24:13	93.478	07/23/02 05:30:13	86.141
07/23/02 02:13:13	93.905	07/23/02 03:19:13	93.279	07/23/02 04:25:13	93.649	07/23/02 05:31:13	85.259
07/23/02 02:14:13	93.905	07/23/02 03:20:13	92.710	07/23/02 04:26:13	92.710	07/23/02 05:32:13	86.511
07/23/02 02:15:13	93.137	07/23/02 03:21:13	93.336	07/23/02 04:27:13	93.137	07/23/02 05:33:13	85.316
07/23/02 02:16:13	92.568	07/23/02 03:22:13	93.450	07/23/02 04:28:13	93.791	07/23/02 05:34:13	85.231
07/23/02 02:17:13	93.393	07/23/02 03:23:13	92.881	07/23/02 04:29:13	93.023	07/23/02 05:35:13	85.316
07/23/02 02:18:13	93.848	07/23/02 03:24:13	94.929	07/23/02 04:30:13	93.023	07/23/02 05:36:13	85.373
07/23/02 02:19:13	94.047	07/23/02 03:25:13	92.881	07/23/02 04:31:13	92.511	07/23/02 05:37:13	85.003
07/23/02 02:20:13	93.393	07/23/02 03:26:13	92.824	07/23/02 04:32:13	93.478	07/23/02 05:38:13	84.605
07/23/02 02:21:13	94.587	07/23/02 03:27:13	93.165	07/23/02 04:33:13	94.530	07/23/02 05:39:13	84.122
07/23/02 02:22:13	93.706	07/23/02 03:28:13	94.360	07/23/02 04:34:13	93.080	07/23/02 05:40:13	85.060
07/23/02 02:23:13	93.848	07/23/02 03:29:13	94.218	07/23/02 04:35:13	93.279	07/23/02 05:41:13	82.899
07/23/02 02:24:13	93.905	07/23/02 03:30:13	93.649	07/23/02 04:36:13	93.023	07/23/02 05:42:13	83.724
07/23/02 02:25:13	93.649	07/23/02 03:31:13	94.360	07/23/02 04:37:13	93.706	07/23/02 05:43:13	83.354
07/23/02 02:26:13	94.161	07/23/02 03:32:13	94.274	07/23/02 04:38:13	94.161	07/23/02 05:44:13	83.866
07/23/02 02:27:13	93.279	07/23/02 03:33:13	93.734	07/23/02 04:39:13	93.393	07/23/02 05:45:13	82.899
07/23/02 02:28:13	94.019	07/23/02 03:34:13	95.042	07/23/02 04:40:13	93.848	07/23/02 05:46:13	83.041
07/23/02 02:29:13	94.104	07/23/02 03:35:13	93.137	07/23/02 04:41:13	94.019	07/23/02 05:47:13	81.505
07/23/02 02:30:13	93.023	07/23/02 03:36:13	93.393	07/23/02 04:42:13	93.649	07/23/02 05:48:13	80.311
07/23/02 02:31:13	93.080	07/23/02 03:37:13	93.592	07/23/02 04:43:13	93.478	07/23/02 05:49:13	97.460
07/23/02 02:32:13	93.734	07/23/02 03:38:13	93.905	07/23/02 04:44:13	93.450	07/23/02 05:50:13	94.019
07/23/02 02:33:13	94.104	07/23/02 03:39:13	94.019	07/23/02 04:45:13	91.118	07/23/02 05:51:13	90.236
07/23/02 02:34:13	93.222	07/23/02 03:40:13	94.047	07/23/02 04:46:13	94.019	07/23/02 05:52:13	92.198
07/23/02 02:35:13	93.393	07/23/02 03:41:13	93.535	07/23/02 04:47:13	92.881	07/23/02 05:53:13	91.260
07/23/02 02:36:13	93.478	07/23/02 03:42:13	94.417	07/23/02 04:48:13	92.398	07/23/02 05:54:13	92.255
07/23/02 02:37:13	94.274	07/23/02 03:43:13	93.222	07/23/02 04:49:13	93.592	07/23/02 05:55:13	92.653
07/23/02 02:38:13	93.791	07/23/02 03:44:13	93.649	07/23/02 04:50:13	93.080	07/23/02 05:56:13	90.293
07/23/02 02:39:13	93.478	07/23/02 03:45:13	93.649	07/23/02 04:51:13	94.019	07/23/02 05:57:13	90.890
07/23/02 02:40:13	92.909	07/23/02 03:46:13	93.393	07/23/02 04:52:13	92.824	07/23/02 05:58:13	92.454
07/23/02 02:41:13	92.568	07/23/02 03:47:13	93.791	07/23/02 04:53:13	92.710	07/23/02 05:59:13	91.374
07/23/02 02:42:13	93.450	07/23/02 03:48:13	93.848	07/23/02 04:54:13	93.905	07/23/02 06:00:13	91.374
07/23/02 02:43:13	93.023	07/23/02 03:49:13	93.165	07/23/02 04:55:13	93.137	07/23/02 06:01:13	91.317
07/23/02 02:44:13	93.535	07/23/02 03:50:13	93.905	07/23/02 04:56:13	93.336	07/23/02 06:02:13	90.947
07/23/02 02:45:13	93.962	07/23/02 03:51:13	93.791	07/23/02 04:57:13	93.393	07/23/02 06:03:13	90.293
07/23/02 02:46:13	93.222	07/23/02 03:52:13	93.791	07/23/02 04:58:13	71.068	07/23/02 06:04:13	89.980
07/23/02 02:47:13	91.687	07/23/02 03:53:13	93.336	07/23/02 04:59:13	86.397	07/23/02 06:05:13	90.606
07/23/02 02:48:13	94.530	07/23/02 03:54:13	94.019	07/23/02 05:00:13	91.260	07/23/02 06:06:13	90.634
07/23/02 02:49:13	93.649	07/23/02 03:55:13	93.535	07/23/02 05:01:13	89.980	07/23/02 06:07:13	90.805
07/23/02 02:50:13	92.198	07/23/02 03:56:13	93.535	07/23/02 05:02:13	90.890	07/23/02 06:08:13	90.805
07/23/02 02:51:13	94.047	07/23/02 03:57:13	93.450	07/23/02 05:03:13	89.468	07/23/02 06:09:13	89.611
07/23/02 02:52:13	93.478	07/23/02 03:58:13	92.142	07/23/02 05:04:13	89.468	07/23/02 06:10:13	89.980
07/23/02 02:53:13	93.165	07/23/02 03:59:13	93.592	07/23/02 05:05:13	89.497	07/23/02 06:11:13	90.435
07/23/02 02:54:13	93.734	07/23/02 04:00:13	94.104	07/23/02 05:06:13	89.241	07/23/02 06:12:13	88.985
07/23/02 02:55:13	93.279	07/23/02 04:01:13	93.165	07/23/02 05:07:13	88.672	07/23/02 06:13:13	90.378

755 RIVER RD. - NO. 7555 cont.

Date Time	Pres (PSI)	Date Time	Pres (PSI)	Date Time	Pres (PSI)	Date Time	Pres (PSI
07/23/02 06:14:13	88.928	07/23/02 07:20:13	84.748	07/23/02 08:26:13	88.729	07/23/02 09:32:13	86.653
07/23/02 06:15:13	88.587	07/23/02 07:21:13	85.885	07/23/02 08:27:13	87.392	07/23/02 09:33:13	85.629
07/23/02 06:16:13	90.691	07/23/02 07:22:13	86.710	07/23/02 08:28:13	89.241	07/23/02 09:34:13	84.492
07/23/02 06:17:13	89.980	07/23/02 07:23:13	84.662	07/23/02 08:29:13	88.729	07/23/02 09:35:13	85.800
07/23/02 06:18:13	90.435	07/23/02 07:24:13	87.279	07/23/02 08:30:13	89.411	07/23/02 09:36:13	85.686
07/23/02 06:19:13	88.985	07/23/02 07:25:13	85.060	07/23/02 08:31:13	88.587	07/23/02 09:37:13	86.966
07/23/02 06:20:13	89.611	07/23/02 07:26:13	85.316	07/23/02 08:32:13	88.672	07/23/02 09:38:13	84.918
07/23/02 06:21:13	89.212	07/23/02 07:27:13	85.885	07/23/02 08:33:13	88.018	07/23/02 09:39:13	85.942
07/23/02 06:22:13	90.862	07/23/02 07:28:13	86.255	07/23/02 08:34:13	88.103	07/23/02 09:40:13	86.824
07/23/02 06:23:13	89.724	07/23/02 07:29:13	85.885	07/23/02 08:35:13	88.729	07/23/02 09:41:13	85.316
07/23/02 06:24:13	74.822	07/23/02 07:30:13	85.743	07/23/02 08:36:13	87.279	07/23/02 09:42:13	86.568
07/23/02 06:25:13	77.268	07/23/02 07:31:13	85.231	07/23/02 08:37:13	86.653	07/23/02 09:43:13	86.397
07/23/02 06:26:13	80.823	07/23/02 07:32:13	85.572	07/23/02 08:38:13	88.359	07/23/02 09:44:13	87.506
07/23/02 06:27:13	89.212	07/23/02 07:33:13	86.937	07/23/02 08:39:13	88.018	07/23/02 09:45:13	87.449
07/23/02 06:28:13	89.241	07/23/02 07:34:13	87.023	07/23/02 08:40:13	85.828	07/23/02 09:46:13	86.511
07/23/02 06:29:13	87.279	07/23/02 07:35:13	86.255	07/23/02 08:41:13	88.587	07/23/02 09:47:13	86.397
07/23/02 06:30:13	87.535	07/23/02 07:36:13	86.710	07/23/02 08:42:13	90.236	07/23/02 09:48:13	86.824
07/23/02 06:31:13	87.847	07/23/02 07:37:13	86.369	07/23/02 08:43:13	87.335	07/23/02 09:49:13	86.966
07/23/02 06:32:13	87.535	07/23/02 07:38:13	85.174	07/23/02 08:44:13	82.017	07/23/02 09:50:13	87.023
07/23/02 06:33:13	89.298	07/23/02 07:39:13	90.322	07/23/02 08:45:13	85.629	07/23/02 09:51:13	87.904
07/23/02 06:34:13	88.644	07/23/02 07:40:13	88.359	07/23/02 08:46:13	84.292	07/23/02 09:52:13	86.880
07/23/02 06:35:13	88.985	07/23/02 07:41:13	89.042	07/23/02 08:47:13	83.041	07/23/02 09:53:13	90.293
07/23/02 06:36:13	88.672	07/23/02 07:42:13	87.961	07/23/02 08:48:13	82.842	07/23/02 09:54:13	86.312
07/23/02 06:37:13	88.928	07/23/02 07:43:13	87.506	07/23/02 08:49:13	86.141	07/23/02 09:55:13	81.591
07/23/02 06:38:13	88.928	07/23/02 07:44:13	86.937	07/23/02 08:50:13	86.653	07/23/02 09:56:13	83.269
07/23/02 06:39:13	89.099	07/23/02 07:45:13	86.084	07/23/02 08:51:13	88.331	07/23/02 09:57:13	82.273
07/23/02 06:40:13	87.023	07/23/02 07:46:13	87.648	07/23/02 08:52:13	86.653	07/23/02 09:58:13	82.273
07/23/02 06:41:13	86.198	07/23/02 07:47:13	87.762	07/23/02 08:53:13	86.255	07/23/02 09:59:13	82.586
07/23/02 06:42:13	88.928	07/23/02 07:48:13	88.331	07/23/02 08:54:13	86.454	07/23/02 10:00:13	80.254
07/23/02 06:43:13	88.530	07/23/02 07:49:13	88.018	07/23/02 08:55:13	86.397	07/23/02 10:01:13	84.122
07/23/02 06:44:13	88.900	07/23/02 07:50:13	87.847	07/23/02 08:56:13	86.084	07/23/02 10:02:13	81.847
07/23/02 06:45:13	88.217	07/23/02 07:51:13	87.961	07/23/02 08:57:13	86.084	07/23/02 10:03:13	82.586
07/23/02 06:46:13	87.790	07/23/02 07:52:13	87.591	07/23/02 08:58:13	79.373	07/23/02 10:04:13	81.278
07/23/02 06:47:13	88.331	07/23/02 07:53:13	89.468	07/23/02 08:59:13	77.012	07/23/02 10:05:13	80.766
07/23/02 06:48:13	89.212	07/23/02 07:54:13	87.648	07/23/02 09:00:13	79.572	07/23/02 10:06:13	81.904
07/23/02 06:49:13	86.511	07/23/02 07:55:13	86.880	07/23/02 09:01:13	76.472	07/23/02 10:07:13	80.994
07/23/02 06:50:13	87.136	07/23/02 07:56:13	87.790	07/23/02 09:02:13	76.728	07/23/02 10:08:13	82.131
07/23/02 06:51:13	86.653	07/23/02 07:57:13	84.918	07/23/02 09:03:13	78.349	07/23/02 10:09:13	82.416
07/23/02 06:52:13	87.335	07/23/02 07:58:13	87.961	07/23/02 09:04:13	77.211	07/23/02 10:10:13	80.880
07/23/02 06:53:13	87.847	07/23/02 07:59:13	86.198	07/23/02 09:05:13	78.235	07/23/02 10:11:13	82.387
07/23/02 06:54:13	87.790	07/23/02 08:00:13	87.847	07/23/02 09:06:13	77.410	07/23/02 10:12:13	80.112
07/23/02 06:55:13	87.648	07/23/02 08:01:13	89.241	07/23/02 09:07:13	77.154	07/23/02 10:13:13	81.079
07/23/02 06:56:13	87.023	07/23/02 08:02:13	90.179	07/23/02 09:08:13	77.467	07/23/02 10:14:13	82.216
07/23/02 06:57:13	86.937	07/23/02 08:03:13	90.492	07/23/02 09:09:13	76.898	07/23/02 10:15:13	81.250
07/23/02 06:58:13	86.966	07/23/02 08:04:13	89.099	07/23/02 09:10:13	77.467	07/23/02 10:16:13	80.112
07/23/02 06:59:13	85.885	07/23/02 08:05:13	89.411	07/23/02 09:11:13	77.041	07/23/02 10:17:13	82.643
07/23/02 07:00:13	88.018	07/23/02 08:06:13	82.899	07/23/02 09:12:13	76.529	07/23/02 10:18:13	81.818
07/23/02 07:01:13	86.397	07/23/02 08:07:13	86.653	07/23/02 09:13:13	77.097	07/23/02 10:19:13	84.349
07/23/02 07:02:13	87.279	07/23/02 08:08:13	85.060	07/23/02 09:14:13	77.524	07/23/02 10:20:13	88.786
07/23/02 07:03:13	86.255	07/23/02 08:09:13	85.885	07/23/02 09:15:13	76.586	07/23/02 10:21:13	88.416
07/23/02 07:04:13	85.174	07/23/02 08:10:13	90.066	07/23/02 09:16:13	77.211	07/23/02 10:22:13	86.824
07/23/02 07:05:13	86.710	07/23/02 08:11:13	90.492	07/23/02 09:17:13	75.647	07/23/02 10:23:13	88.331
07/23/02 07:06:13	87.279	07/23/02 08:12:13	88.928	07/23/02 09:18:13	76.586	07/23/02 10:24:13	86.141
07/23/02 07:07:13	87.023	07/23/02 08:13:13	89.866	07/23/02 09:19:13	76.017	07/23/02 10:25:13	86.255
07/23/02 07:08:13	84.861	07/23/02 08:14:13	89.212	07/23/02 09:20:13	76.216	07/23/02 10:26:13	87.079
07/23/02 07:09:13	85.430	07/23/02 08:15:13	89.042	07/23/02 09:21:13	76.898	07/23/02 10:27:13	89.355
07/23/02 07:10:13	85.942	07/23/02 08:16:13	89.866	07/23/02 09:22:13	77.865	07/23/02 10:28:13	85.117
07/23/02 07:11:13	86.568	07/23/02 08:17:13	88.530	07/23/02 09:23:13	78.974	07/23/02 10:29:13	83.354
07/23/02 07:12:13	84.236	07/23/02 08:18:13	89.866	07/23/02 09:24:13	83.667	07/23/02 10:30:13	85.743
07/23/02 07:13:13	84.947	07/23/02 08:19:13	88.928	07/23/02 09:25:13	88.644	07/23/02 10:31:13	87.079
07/23/02 07:14:13	83.724	07/23/02 08:20:13	90.179	07/23/02 09:26:13	84.548	07/23/02 10:32:13	84.804
07/23/02 07:15:13	84.804	07/23/02 08:21:13	88.786	07/23/02 09:27:13	87.279	07/23/02 10:33:13	85.800
07/23/02 07:16:13	84.349	07/23/02 08:22:13	87.790	07/23/02 09:28:13	85.828	07/23/02 10:34:13	88.530
07/23/02 07:17:13	82.728	07/23/02 08:23:13	89.099	07/23/02 09:29:13	84.492	07/23/02 10:35:13	87.790
07/23/02 07:18:13	84.662	07/23/02 08:24:13	89.554	07/23/02 09:30:13	85.430	07/23/02 10:36:13	86.454
07/23/02 07:19:13	84.918	07/23/02 08:25:13	90.066	07/23/02 09:31:13	85.629	07/23/02 10:37:13	89.241

755 RIVER RD. - NO. 7555 cont.

Date	Time	Pres (PSI)
07/23/02	10:38:13	88.217
07/23/02	10:39:13	86.511
07/23/02	10:40:13	86.624
07/23/02	10:41:13	89.554
07/23/02	10:42:13	88.217
07/23/02	10:43:13	88.530
07/23/02	10:44:13	86.084
07/23/02	10:45:13	86.568
07/23/02	10:46:13	86.511
07/23/02	10:47:13	87.506
07/23/02	10:48:13	83.866
07/23/02	10:49:13	85.117
07/23/02	10:50:13	83.155
07/23/02	10:51:13	86.710
07/23/02	10:52:13	87.506
07/23/02	10:53:13	84.861
07/23/02	10:54:13	83.980
07/23/02	10:55:13	84.804
07/23/02	10:56:13	85.316
07/23/02	10:57:13	84.748
07/23/02	10:58:13	82.529
07/23/02	10:59:13	84.378
07/23/02	11:00:13	83.041
07/23/02	11:01:13	82.160
07/23/02	11:02:13	84.122
07/23/02	11:03:13	84.748
07/23/02	11:04:13	59.636
07/23/02	11:05:13	71.353
07/23/02	11:06:13	88.331
07/23/02	11:07:13	84.179
07/23/02	11:08:13	84.236
07/23/02	11:09:13	84.691
07/23/02	11:10:13	83.724
07/23/02	11:11:13	85.999
07/23/02	11:12:13	85.003
07/23/02	11:13:13	83.809
07/23/02	11:14:13	83.923
07/23/02	11:15:13	83.155
07/23/02	11:16:13	83.297
07/23/02	11:17:13	84.691
07/23/02	11:18:13	83.667
07/23/02	11:19:13	82.273
07/23/02	11:20:13	83.809
07/23/02	11:21:13	84.605
07/23/02	11:22:13	83.525
07/23/02	11:23:13	84.292
07/23/02	11:24:13	82.899
07/23/02	11:25:13	84.748
07/23/02	11:26:13	84.236
07/23/02	11:27:13	84.037
07/23/02	11:28:13	87.222
07/23/02	11:29:13	84.605
07/23/02	11:30:13	84.492
07/23/02	11:31:13	85.487
07/23/02	11:32:13	85.430
07/23/02	11:33:13	83.212
07/23/02	11:34:13	86.824
07/23/02	11:35:13	85.316
07/23/02	11:36:13	85.800
07/23/02	11:37:13	85.316
07/23/02	11:38:13	84.292
07/23/02	11:39:13	84.691
07/23/02	11:40:13	84.662
07/23/02	11:41:13	85.999
07/23/02	11:42:13	85.828
07/23/02	11:43:13	84.662
07/23/02	11:44:13	85.828
07/23/02	11:45:13	86.084
07/23/02	11:46:13	86.084
07/23/02	11:47:13	85.373
07/23/02	11:48:13	85.060
07/23/02	11:49:13	85.003
07/23/02	11:50:13	87.023
07/23/02	11:51:13	86.198
07/23/02	11:52:13	85.487
07/23/02	11:53:13	84.918
07/23/02	11:54:13	84.918
07/23/02	11:55:13	85.828
07/23/02	11:56:13	85.686
07/23/02	11:57:13	85.373
07/23/02	11:58:13	86.880
07/23/02	11:59:13	86.198
07/23/02	12:00:13	84.435
07/23/02	12:01:13	85.885
07/23/02	12:02:13	86.624
07/23/02	12:03:13	83.923
07/23/02	12:04:13	85.003
07/23/02	12:05:13	84.662
07/23/02	12:06:13	83.980
07/23/02	12:07:13	85.316
07/23/02	12:08:13	86.084
07/23/02	12:09:13	85.942
07/23/02	12:10:13	86.198
07/23/02	12:11:13	86.397
07/23/02	12:12:13	85.885
07/23/02	12:13:13	86.880
07/23/02	12:14:13	85.515
07/23/02	12:15:13	84.748
07/23/02	12:16:13	85.999
07/23/02	12:17:13	84.435
07/23/02	12:18:13	81.648
07/23/02	12:19:13	86.198
07/23/02	12:20:13	82.700
07/23/02	12:21:13	85.231
07/23/02	12:22:13	85.259
07/23/02	12:23:13	83.866
07/23/02	12:24:13	85.572
07/23/02	12:25:13	83.781
07/23/02	12:26:13	87.193
07/23/02	12:27:13	84.947
07/23/02	12:28:13	84.861
07/23/02	12:29:13	84.662
07/23/02	12:30:13	84.292
07/23/02	12:31:13	86.084
07/23/02	12:32:13	86.397
07/23/02	12:33:13	85.316
07/23/02	12:34:13	86.141
07/23/02	12:35:13	86.824
07/23/02	12:36:13	85.743
07/23/02	12:37:13	84.435
07/23/02	12:38:13	85.174
07/23/02	12:39:13	84.122
07/23/02	12:40:13	84.378
07/23/02	12:41:13	84.861
07/23/02	12:42:13	87.079
07/23/02	12:43:13	86.568
07/23/02	12:44:13	86.937
07/23/02	12:45:13	87.079
07/23/02	12:46:13	83.866
07/23/02	12:47:13	87.079
07/23/02	12:48:13	87.648
07/23/02	12:49:13	87.591
07/23/02	12:50:13	86.141
07/23/02	12:51:13	86.824
07/23/02	12:52:13	87.023
07/23/02	12:53:13	86.084
07/23/02	12:54:13	84.349
07/23/02	12:55:13	84.947
07/23/02	12:56:13	84.918
07/23/02	12:57:13	84.378
07/23/02	12:58:13	84.605
07/23/02	12:59:13	85.316
07/23/02	13:00:13	85.430
07/23/02	13:01:13	85.743
07/23/02	13:02:13	86.198
07/23/02	13:03:13	85.629
07/23/02	13:04:13	86.084
07/23/02	13:05:13	84.349
07/23/02	13:06:13	84.037
07/23/02	13:07:13	84.605
07/23/02	13:08:13	87.193
07/23/02	13:09:13	63.447
07/23/02	13:10:13	64.812
07/23/02	13:11:13	62.679
07/23/02	13:12:13	60.148
07/23/02	13:13:13	58.754
07/23/02	13:14:13	59.266
07/23/02	13:15:13	55.768
07/23/02	13:16:13	55.598
07/23/02	13:17:13	54.091
07/23/02	13:18:13	53.749
07/23/02	13:19:13	63.418
07/23/02	13:20:13	64.755
07/23/02	13:21:13	79.003
07/23/02	13:22:13	83.809
07/23/02	13:23:13	83.724
07/23/02	13:24:13	84.292
07/23/02	13:25:13	85.231
07/23/02	13:26:13	85.885
07/23/02	13:27:13	83.610
07/23/02	13:28:13	85.828
07/23/02	13:29:13	85.003
07/23/02	13:30:13	84.093
07/23/02	13:31:13	84.435
07/23/02	13:32:13	82.899
07/23/02	13:33:13	84.292
07/23/02	13:34:13	84.918
07/23/02	13:35:13	83.155
07/23/02	13:36:13	84.378
07/23/02	13:37:13	83.041
07/23/02	13:38:13	82.984
07/23/02	13:39:13	81.193
07/23/02	13:40:13	80.766
07/23/02	13:41:13	82.074
07/23/02	13:42:13	82.472
07/23/02	13:43:13	87.023
07/23/02	13:44:13	88.729
07/23/02	13:45:13	85.231
07/23/02	13:46:13	86.824
07/23/02	13:47:13	84.093
07/23/02	13:48:13	83.809
07/23/02	13:49:13	84.691
07/23/02	13:50:13	83.980
07/23/02	13:51:13	81.761
07/23/02	13:52:13	83.553
07/23/02	13:53:13	85.515
07/23/02	13:54:13	84.918
07/23/02	13:55:13	82.728
07/23/02	13:56:13	82.643
07/23/02	13:57:13	84.605
07/23/02	13:58:13	85.885
07/23/02	13:59:13	83.041
07/23/02	14:00:13	82.472
07/23/02	14:01:13	82.529
07/23/02	14:02:13	83.155
07/23/02	14:03:13	83.866
07/23/02	14:04:13	84.918
07/23/02	14:05:13	83.155
07/23/02	14:06:13	83.041
07/23/02	14:07:13	83.269
07/23/02	14:08:13	85.430
07/23/02	14:09:13	83.980
07/23/02	14:10:13	84.804
07/23/02	14:11:13	85.430
07/23/02	14:12:13	83.809
07/23/02	14:13:13	85.231
07/23/02	14:14:13	85.003
07/23/02	14:15:13	84.179
07/23/02	14:16:13	84.236
07/23/02	14:17:13	84.492
07/23/02	14:18:13	84.662
07/23/02	14:19:13	85.515
07/23/02	14:20:13	83.781
07/23/02	14:21:13	84.122
07/23/02	14:22:13	83.667
07/23/02	14:23:13	85.629
07/23/02	14:24:13	83.809
07/23/02	14:25:13	85.629
07/23/02	14:26:13	84.918
07/23/02	14:27:13	84.947
07/23/02	14:28:13	85.629
07/23/02	14:29:13	84.804
07/23/02	14:30:13	84.918
07/23/02	14:31:13	83.809
07/23/02	14:32:13	84.179
07/23/02	14:33:13	85.060
07/23/02	14:34:13	83.781
07/23/02	14:35:13	85.231
07/23/02	14:36:13	84.378
07/23/02	14:37:13	84.748
07/23/02	14:38:13	85.999
07/23/02	14:39:13	85.800
07/23/02	14:40:13	84.861
07/23/02	14:41:13	84.435
07/23/02	14:42:13	85.316
07/23/02	14:43:13	85.686
07/23/02	14:44:13	55.399
07/23/02	14:45:13	64.641
07/23/02	14:46:13	66.831
07/23/02	14:47:13	79.998
07/23/02	14:48:13	82.842
07/23/02	14:49:13	82.700
07/23/02	14:50:13	83.525
07/23/02	14:51:13	84.122
07/23/02	14:52:13	82.956
07/23/02	14:53:13	80.453
07/23/02	14:54:13	82.984
07/23/02	14:55:13	83.980
07/23/02	14:56:13	82.842
07/23/02	14:57:13	83.610
07/23/02	14:58:13	83.781
07/23/02	14:59:13	84.093
07/23/02	15:00:13	83.041
07/23/02	15:01:13	84.292

755 RIVER RD. - NO. 7555 cont.

Date	Time	Pres (PSI)
07/23/02	15:02:13	84.804
07/23/02	15:03:13	83.553
07/23/02	15:04:13	83.724
07/23/02	15:05:13	84.093
07/23/02	15:06:13	84.435
07/23/02	15:07:13	83.923
07/23/02	15:08:13	84.122
07/23/02	15:09:13	84.349
07/23/02	15:10:13	82.842
07/23/02	15:11:13	83.297
07/23/02	15:12:13	83.866
07/23/02	15:13:13	82.643
07/23/02	15:14:13	84.548
07/23/02	15:15:13	82.586
07/23/02	15:16:13	84.548
07/23/02	15:17:13	84.548
07/23/02	15:18:13	87.392
07/23/02	15:19:13	93.080
07/23/02	15:20:13	85.629
07/23/02	15:21:13	87.705
07/23/02	15:22:13	87.535
07/23/02	15:23:13	87.847
07/23/02	15:24:13	88.843
07/23/02	15:25:13	88.018
07/23/02	15:26:13	88.900
07/23/02	15:27:13	87.136
07/23/02	15:28:13	88.331
07/23/02	15:29:13	88.331
07/23/02	15:30:13	88.473
07/23/02	15:31:13	88.103
07/23/02	15:32:13	88.928
07/23/02	15:33:13	87.279
07/23/02	15:34:13	88.985
07/23/02	15:35:13	87.193
07/23/02	15:36:13	85.487
07/23/02	15:37:13	85.828
07/23/02	15:38:13	87.961
07/23/02	15:39:13	85.316
07/23/02	15:40:13	86.056
07/23/02	15:41:13	87.790
07/23/02	15:42:13	87.506
07/23/02	15:43:13	87.648
07/23/02	15:44:13	89.781
07/23/02	15:45:13	89.468
07/23/02	15:46:13	87.961
07/23/02	15:47:13	88.729
07/23/02	15:48:13	89.298
07/23/02	15:49:13	87.762
07/23/02	15:50:13	89.042
07/23/02	15:51:13	87.705
07/23/02	15:52:13	88.018
07/23/02	15:53:13	87.705
07/23/02	15:54:13	88.018
07/23/02	15:55:13	88.843
07/23/02	15:56:13	87.506
07/23/02	15:57:13	88.075
07/23/02	15:58:13	87.847
07/23/02	15:59:13	86.397
07/23/02	16:00:13	87.506
07/23/02	16:01:13	86.824
07/23/02	16:02:13	87.392
07/23/02	16:03:13	84.947
07/23/02	16:04:13	87.335
07/23/02	16:05:13	87.591
07/23/02	16:06:13	87.023
07/23/02	16:07:13	84.662
07/23/02	16:08:13	84.947
07/23/02	16:09:13	85.174
07/23/02	16:10:13	84.918
07/23/02	16:11:13	85.828
07/23/02	16:12:13	87.222
07/23/02	16:13:13	86.056
07/23/02	16:14:13	88.416
07/23/02	16:15:13	87.535
07/23/02	16:16:13	85.885
07/23/02	16:17:13	87.222
07/23/02	16:18:13	86.767
07/23/02	16:19:13	86.624
07/23/02	16:20:13	86.624
07/23/02	16:21:13	88.217
07/23/02	16:22:13	86.056
07/23/02	16:23:13	70.528
07/23/02	16:24:13	92.597
07/23/02	16:25:13	88.160
07/23/02	16:26:13	87.790
07/23/02	16:27:13	88.018
07/23/02	16:28:13	87.449
07/23/02	16:29:13	87.335
07/23/02	16:30:13	88.160
07/23/02	16:31:13	88.075
07/23/02	16:32:13	87.904
07/23/02	16:33:13	88.786
07/23/02	16:34:13	86.056
07/23/02	16:35:13	88.018
07/23/02	16:36:13	87.023
07/23/02	16:37:13	88.103
07/23/02	16:38:13	86.880
07/23/02	16:39:13	85.629
07/23/02	16:40:13	86.824
07/23/02	16:41:13	78.974
07/23/02	16:42:13	69.106
07/23/02	16:43:13	70.187
07/23/02	16:44:13	70.699
07/23/02	16:45:13	69.931
07/23/02	16:46:13	69.106
07/23/02	16:47:13	84.093
07/23/02	16:48:13	87.079
07/23/02	16:49:13	83.781
07/23/02	16:50:13	85.743
07/23/02	16:51:13	85.373
07/23/02	16:52:13	84.861
07/23/02	16:53:13	84.037
07/23/02	16:54:13	83.809
07/23/02	16:55:13	84.122
07/23/02	16:56:13	84.748
07/23/02	16:57:13	84.605
07/23/02	16:58:13	85.003
07/23/02	16:59:13	85.686
07/23/02	17:00:13	84.947
07/23/02	17:01:13	83.610
07/23/02	17:02:13	85.743
07/23/02	17:03:13	85.373
07/23/02	17:04:13	85.117
07/23/02	17:05:13	82.956
07/23/02	17:06:13	84.548
07/23/02	17:07:13	84.037
07/23/02	17:08:13	88.018
07/23/02	17:09:13	91.829
07/23/02	17:10:13	86.767
07/23/02	17:11:13	86.624
07/23/02	17:12:13	86.824
07/23/02	17:13:13	86.710
07/23/02	17:14:13	88.103
07/23/02	17:15:13	87.392
07/23/02	17:16:13	86.397
07/23/02	17:17:13	85.629
07/23/02	17:18:13	85.003
07/23/02	17:19:13	87.136
07/23/02	17:20:13	87.023
07/23/02	17:21:13	86.255
07/23/02	17:22:13	84.947
07/23/02	17:23:13	87.023
07/23/02	17:24:13	87.335
07/23/02	17:25:13	86.653
07/23/02	17:26:13	85.828
07/23/02	17:27:13	86.141
07/23/02	17:28:13	84.378
07/23/02	17:29:13	85.003
07/23/02	17:30:13	87.449
07/23/02	17:31:13	86.880
07/23/02	17:32:13	85.231
07/23/02	17:33:13	86.141
07/23/02	17:34:13	85.117
07/23/02	17:35:13	86.397
07/23/02	17:36:13	85.231
07/23/02	17:37:13	85.060
07/23/02	17:38:13	87.079
07/23/02	17:39:13	86.084
07/23/02	17:40:13	85.515
07/23/02	17:41:13	83.553
07/23/02	17:42:13	86.511
07/23/02	17:43:13	86.198
07/23/02	17:44:13	86.568
07/23/02	17:45:13	86.767
07/23/02	17:46:13	87.279
07/23/02	17:47:13	85.686
07/23/02	17:48:13	86.511
07/23/02	17:49:13	86.880
07/23/02	17:50:13	87.591
07/23/02	17:51:13	85.174
07/23/02	17:52:13	87.079
07/23/02	17:53:13	86.568
07/23/02	17:54:13	83.610
07/23/02	17:55:13	85.174
07/23/02	17:56:13	85.003
07/23/02	17:57:13	86.568
07/23/02	17:58:13	86.624
07/23/02	17:59:13	86.084
07/23/02	18:00:13	86.937
07/23/02	18:01:13	86.056
07/23/02	18:02:13	86.312
07/23/02	18:03:13	86.141
07/23/02	18:04:13	86.824
07/23/02	18:05:13	86.056
07/23/02	18:06:13	84.861
07/23/02	18:07:13	85.316
07/23/02	18:08:13	85.572
07/23/02	18:09:13	85.373
07/23/02	18:10:13	84.605
07/23/02	18:11:13	85.828
07/23/02	18:12:13	86.880
07/23/02	18:13:13	86.198
07/23/02	18:14:13	84.947
07/23/02	18:15:13	84.918
07/23/02	18:16:13	87.648
07/23/02	18:17:13	83.525
07/23/02	18:18:13	87.193
07/23/02	18:19:13	85.743
07/23/02	18:20:13	85.629
07/23/02	18:21:13	86.084
07/23/02	18:22:13	84.662
07/23/02	18:23:13	84.349
07/23/02	18:24:13	84.605
07/23/02	18:25:13	84.122
07/23/02	18:26:13	85.316
07/23/02	18:27:13	85.117
07/23/02	18:28:13	84.378
07/23/02	18:29:13	85.942
07/23/02	18:30:13	86.454
07/23/02	18:31:13	83.781
07/23/02	18:32:13	86.454
07/23/02	18:33:13	84.861
07/23/02	18:34:13	85.174
07/23/02	18:35:13	83.667
07/23/02	18:36:13	86.568
07/23/02	18:37:13	86.710
07/23/02	18:38:13	85.885
07/23/02	18:39:13	85.686
07/23/02	18:40:13	86.568
07/23/02	18:41:13	86.653
07/23/02	18:42:13	86.084
07/23/02	18:43:13	86.312
07/23/02	18:44:13	87.790
07/23/02	18:45:13	86.454
07/23/02	18:46:13	86.141
07/23/02	18:47:13	86.653
07/23/02	18:48:13	84.918
07/23/02	18:49:13	85.515
07/23/02	18:50:13	86.880
07/23/02	18:51:13	86.824
07/23/02	18:52:13	85.259
07/23/02	18:53:13	86.880
07/23/02	18:54:13	85.174
07/23/02	18:55:13	84.349
07/23/02	18:56:13	85.430
07/23/02	18:57:13	85.828
07/23/02	18:58:13	87.591
07/23/02	18:59:13	84.748
07/23/02	19:00:13	83.724
07/23/02	19:01:13	85.800
07/23/02	19:02:13	85.800
07/23/02	19:03:13	85.942
07/23/02	19:04:13	85.117
07/23/02	19:05:13	86.454
07/23/02	19:06:13	85.828
07/23/02	19:07:13	86.312
07/23/02	19:08:13	85.942
07/23/02	19:09:13	85.629
07/23/02	19:10:13	87.222
07/23/02	19:11:13	87.222
07/23/02	19:12:13	86.084
07/23/02	19:13:13	86.056
07/23/02	19:14:13	86.056
07/23/02	19:15:13	86.653
07/23/02	19:16:13	84.662
07/23/02	19:17:13	86.312
07/23/02	19:18:13	86.966
07/23/02	19:19:13	86.824
07/23/02	19:20:13	85.686
07/23/02	19:21:13	85.885
07/23/02	19:22:13	86.824
07/23/02	19:23:13	85.800
07/23/02	19:24:13	85.515
07/23/02	19:25:13	86.568

755 RIVER RD. - NO. 7555 cont.

Date Time	Pres (PSI)	Date Time	Pres (PSI)	Date Time	Pres (PSI)	Date Time	Pres (PSI
07/23/02 19:26:13	85.316	07/23/02 20:32:13	86.056	07/23/02 21:38:13	86.653	07/23/02 22:44:13	87.449
07/23/02 19:27:13	86.454	07/23/02 20:33:13	86.397	07/23/02 21:39:13	86.966	07/23/02 22:45:13	88.672
07/23/02 19:28:13	85.487	07/23/02 20:34:13	86.454	07/23/02 21:40:13	86.880	07/23/02 22:46:13	87.847
07/23/02 19:29:13	86.710	07/23/02 20:35:13	83.269	07/23/02 21:41:13	86.624	07/23/02 22:47:13	88.331
07/23/02 19:30:13	83.809	07/23/02 20:36:13	86.624	07/23/02 21:42:13	87.279	07/23/02 22:48:13	87.449
07/23/02 19:31:13	86.710	07/23/02 20:37:13	85.487	07/23/02 21:43:13	85.828	07/23/02 22:49:13	89.156
07/23/02 19:32:13	86.511	07/23/02 20:38:13	86.198	07/23/02 21:44:13	85.999	07/23/02 22:50:13	90.435
07/23/02 19:33:13	85.174	07/23/02 20:39:13	87.904	07/23/02 21:45:13	88.018	07/23/02 22:51:13	88.416
07/23/02 19:34:13	85.828	07/23/02 20:40:13	87.648	07/23/02 21:46:13	71.580	07/23/02 22:52:13	88.587
07/23/02 19:35:13	87.023	07/23/02 20:41:13	85.686	07/23/02 21:47:13	64.272	07/23/02 22:53:13	90.606
07/23/02 19:36:13	86.767	07/23/02 20:42:13	87.648	07/23/02 21:48:13	65.893	07/23/02 22:54:13	88.928
07/23/02 19:37:13	86.568	07/23/02 20:43:13	85.430	07/23/02 21:49:13	66.660	07/23/02 22:55:13	88.160
07/23/02 19:38:13	87.506	07/23/02 20:44:13	87.961	07/23/02 21:50:13	66.831	07/23/02 22:56:13	87.904
07/23/02 19:39:13	85.231	07/23/02 20:45:13	86.624	07/23/02 21:51:13	66.348	07/23/02 22:57:13	88.103
07/23/02 19:40:13	84.804	07/23/02 20:46:13	86.454	07/23/02 21:52:13	65.580	07/23/02 22:58:13	88.644
07/23/02 19:41:13	85.572	07/23/02 20:47:13	87.023	07/23/02 21:53:13	65.694	07/23/02 22:59:13	87.762
07/23/02 19:42:13	87.904	07/23/02 20:48:13	85.515	07/23/02 21:54:13	65.381	07/23/02 23:00:13	87.535
07/23/02 19:43:13	85.572	07/23/02 20:49:13	87.023	07/23/02 21:55:13	65.836	07/23/02 23:01:13	87.392
07/23/02 19:44:13	84.548	07/23/02 20:50:13	85.231	07/23/02 21:56:13	65.267	07/23/02 23:02:13	87.762
07/23/02 19:45:13	87.193	07/23/02 20:51:13	86.397	07/23/02 21:57:13	76.387	07/23/02 23:03:13	88.331
07/23/02 19:46:13	86.653	07/23/02 20:52:13	86.966	07/23/02 21:58:13	82.956	07/23/02 23:04:13	87.762
07/23/02 19:47:13	85.060	07/23/02 20:53:13	86.767	07/23/02 21:59:13	83.781	07/23/02 23:05:13	88.103
07/23/02 19:48:13	85.800	07/23/02 20:54:13	85.800	07/23/02 22:00:13	83.297	07/23/02 23:06:13	88.530
07/23/02 19:49:13	85.629	07/23/02 20:55:13	85.572	07/23/02 22:01:13	82.984	07/23/02 23:07:13	86.966
07/23/02 19:50:13	85.686	07/23/02 20:56:13	86.255	07/23/02 22:02:13	82.956	07/23/02 23:08:13	89.241
07/23/02 19:51:13	87.279	07/23/02 20:57:13	84.349	07/23/02 22:03:13	82.387	07/23/02 23:09:13	88.786
07/23/02 19:52:13	86.141	07/23/02 20:58:13	86.511	07/23/02 22:04:13	81.705	07/23/02 23:10:13	88.729
07/23/02 19:53:13	87.222	07/23/02 20:59:13	85.259	07/23/02 22:05:13	83.724	07/23/02 23:11:13	89.781
07/23/02 19:54:13	86.198	07/23/02 21:00:13	84.378	07/23/02 22:06:13	82.984	07/23/02 23:12:13	88.843
07/23/02 19:55:13	86.767	07/23/02 21:01:13	82.074	07/23/02 22:07:13	83.923	07/23/02 23:13:13	88.843
07/23/02 19:56:13	85.743	07/23/02 21:02:13	87.449	07/23/02 22:08:13	83.212	07/23/02 23:14:13	88.644
07/23/02 19:57:13	85.828	07/23/02 21:03:13	85.316	07/23/02 22:09:13	84.236	07/23/02 23:15:13	89.810
07/23/02 19:58:13	87.335	07/23/02 21:04:13	85.231	07/23/02 22:10:13	84.349	07/23/02 23:16:13	87.790
07/23/02 19:59:13	87.279	07/23/02 21:05:13	85.828	07/23/02 22:11:13	84.122	07/23/02 23:17:13	87.648
07/23/02 20:00:13	85.259	07/23/02 21:06:13	85.743	07/23/02 22:12:13	81.648	07/23/02 23:18:13	90.236
07/23/02 20:01:13	87.392	07/23/02 21:07:13	84.947	07/23/02 22:13:13	82.842	07/23/02 23:19:13	88.729
07/23/02 20:02:13	84.947	07/23/02 21:08:13	85.885	07/23/02 22:14:13	82.330	07/23/02 23:20:13	90.122
07/23/02 20:03:13	85.686	07/23/02 21:09:13	86.511	07/23/02 22:15:13	84.662	07/23/02 23:21:13	89.298
07/23/02 20:04:13	87.335	07/23/02 21:10:13	85.174	07/23/02 22:16:13	84.435	07/23/02 23:22:13	88.985
07/23/02 20:05:13	85.259	07/23/02 21:11:13	84.804	07/23/02 22:17:13	83.553	07/23/02 23:23:13	89.781
07/23/02 20:06:13	85.430	07/23/02 21:12:13	86.056	07/23/02 22:18:13	83.781	07/23/02 23:24:13	89.810
07/23/02 20:07:13	85.003	07/23/02 21:13:13	85.686	07/23/02 22:19:13	92.454	07/23/02 23:25:13	88.672
07/23/02 20:08:13	85.686	07/23/02 21:14:13	85.231	07/23/02 22:20:13	85.629	07/23/02 23:26:13	91.061
07/23/02 20:09:13	86.511	07/23/02 21:15:13	85.117	07/23/02 22:21:13	87.392	07/23/02 23:27:13	89.866
07/23/02 20:10:13	87.449	07/23/02 21:16:13	85.117	07/23/02 22:22:13	86.966	07/23/02 23:28:13	91.004
07/23/02 20:11:13	85.430	07/23/02 21:17:13	86.141	07/23/02 22:23:13	86.880	07/23/02 23:29:13	89.980
07/23/02 20:12:13	85.800	07/23/02 21:18:13	85.942	07/23/02 22:24:13	86.880	07/23/02 23:30:13	89.212
07/23/02 20:13:13	86.141	07/23/02 21:19:13	86.084	07/23/02 22:25:13	87.136	07/23/02 23:31:13	89.298
07/23/02 20:14:13	83.809	07/23/02 21:20:13	85.487	07/23/02 22:26:13	85.629	07/23/02 23:32:13	89.099
07/23/02 20:15:13	86.397	07/23/02 21:21:13	85.743	07/23/02 22:27:13	85.430	07/23/02 23:33:13	88.160
07/23/02 20:16:13	85.487	07/23/02 21:22:13	85.885	07/23/02 22:28:13	87.193	07/23/02 23:34:13	90.066
07/23/02 20:17:13	86.198	07/23/02 21:23:13	84.804	07/23/02 22:29:13	86.511	07/23/02 23:35:13	89.611
07/23/02 20:18:13	85.572	07/23/02 21:24:13	86.084	07/23/02 22:30:13	87.535	07/23/02 23:36:13	89.468
07/23/02 20:19:13	85.686	07/23/02 21:25:13	83.553	07/23/02 22:31:13	87.136	07/23/02 23:37:13	89.554
07/23/02 20:20:13	86.198	07/23/02 21:26:13	85.231	07/23/02 22:32:13	86.653	07/23/02 23:38:13	91.317
07/23/02 20:21:13	85.999	07/23/02 21:27:13	86.653	07/23/02 22:33:13	86.141	07/23/02 23:39:13	90.890
07/23/02 20:22:13	85.572	07/23/02 21:28:13	85.942	07/23/02 22:34:13	88.843	07/23/02 23:40:13	91.118
07/23/02 20:23:13	83.923	07/23/02 21:29:13	86.084	07/23/02 22:35:13	86.824	07/23/02 23:41:13	90.890
07/23/02 20:24:13	87.222	07/23/02 21:30:13	86.141	07/23/02 22:36:13	88.018	07/23/02 23:42:13	91.459
07/23/02 20:25:13	85.828	07/23/02 21:31:13	85.828	07/23/02 22:37:13	89.298	07/23/02 23:43:13	91.317
07/23/02 20:26:13	85.800	07/23/02 21:32:13	85.515	07/23/02 22:38:13	87.591	07/23/02 23:44:13	90.492
07/23/02 20:27:13	84.037	07/23/02 21:33:13	84.804	07/23/02 22:39:13	89.212	07/23/02 23:45:13	91.459
07/23/02 20:28:13	84.349	07/23/02 21:34:13	86.397	07/23/02 22:40:13	88.103	07/23/02 23:46:13	90.549
07/23/02 20:29:13	84.435	07/23/02 21:35:13	87.790	07/23/02 22:41:13	88.530	07/23/02 23:47:13	90.322
07/23/02 20:30:13	85.003	07/23/02 21:36:13	86.511	07/23/02 22:42:13	89.497	07/23/02 23:48:13	90.066
07/23/02 20:31:13	85.373	07/23/02 21:37:13	86.255	07/23/02 22:43:13	87.705	07/23/02 23:49:13	90.549

755 RIVER RD. - NO. 7555 cont.

Date Time	Pres (PSI)	Date Time	Pres (PSI)	Date Time	Pres (PSI)	Date Time	Pres (PSI
07/23/02 23:50:13	91.061	07/24/02 00:56:13	91.573	07/24/02 02:02:13	92.909	07/24/02 03:08:13	90.691
07/23/02 23:51:13	91.630	07/24/02 00:57:13	93.165	07/24/02 02:03:13	91.175	07/24/02 03:09:13	92.568
07/23/02 23:52:13	90.378	07/24/02 00:58:13	91.886	07/24/02 02:04:13	93.706	07/24/02 03:10:13	93.450
07/23/02 23:53:13	91.459	07/24/02 00:59:13	91.943	07/24/02 02:05:13	92.341	07/24/02 03:11:13	93.023
07/23/02 23:54:13	91.516	07/24/02 01:00:13	92.824	07/24/02 02:06:13	92.767	07/24/02 03:12:13	93.080
07/23/02 23:55:13	92.767	07/24/02 01:01:13	93.023	07/24/02 02:07:13	92.881	07/24/02 03:13:13	92.198
07/23/02 23:56:13	90.492	07/24/02 01:02:13	93.137	07/24/02 02:08:13	92.966	07/24/02 03:14:13	91.743
07/23/02 23:57:13	91.317	07/24/02 01:03:13	92.454	07/24/02 02:09:13	92.909	07/24/02 03:15:13	91.943
07/23/02 23:58:13	91.829	07/24/02 01:04:13	91.829	07/24/02 02:10:13	92.511	07/24/02 03:16:13	92.255
07/23/02 23:59:13	90.066	07/24/02 01:05:13	91.743	07/24/02 02:11:13	92.454	07/24/02 03:17:13	92.142
07/24/02 00:00:13	91.175	07/24/02 01:06:13	92.255	07/24/02 02:12:13	91.943	07/24/02 03:18:13	92.597
07/24/02 00:01:13	89.156	07/24/02 01:07:13	93.336	07/24/02 02:13:13	92.028	07/24/02 03:19:13	92.085
07/24/02 00:02:13	91.886	07/24/02 01:08:13	92.142	07/24/02 02:14:13	92.511	07/24/02 03:20:13	92.142
07/24/02 00:03:13	91.772	07/24/02 01:09:13	92.767	07/24/02 02:15:13	77.865	07/24/02 03:21:13	92.398
07/24/02 00:04:13	92.142	07/24/02 01:10:13	91.943	07/24/02 02:16:13	84.236	07/24/02 03:22:13	92.710
07/24/02 00:05:13	90.947	07/24/02 01:11:13	92.312	07/24/02 02:17:13	83.411	07/24/02 03:23:13	92.142
07/24/02 00:06:13	91.061	07/24/02 01:12:13	91.886	07/24/02 02:18:13	83.212	07/24/02 03:24:13	92.710
07/24/02 00:07:13	91.516	07/24/02 01:13:13	92.198	07/24/02 02:19:13	83.724	07/24/02 03:25:13	92.142
07/24/02 00:08:13	90.805	07/24/02 01:14:13	81.136	07/24/02 02:20:13	83.098	07/24/02 03:26:13	92.028
07/24/02 00:09:13	91.203	07/24/02 01:15:13	81.335	07/24/02 02:21:13	83.809	07/24/02 03:27:13	92.710
07/24/02 00:10:13	92.398	07/24/02 01:16:13	80.368	07/24/02 02:22:13	83.297	07/24/02 03:28:13	92.568
07/24/02 00:11:13	92.909	07/24/02 01:17:13	92.085	07/24/02 02:23:13	83.866	07/24/02 03:29:13	93.450
07/24/02 00:12:13	90.492	07/24/02 01:18:13	91.630	07/24/02 02:24:13	83.724	07/24/02 03:30:13	92.710
07/24/02 00:13:13	92.312	07/24/02 01:19:13	90.862	07/24/02 02:25:13	83.553	07/24/02 03:31:13	92.341
07/24/02 00:14:13	90.322	07/24/02 01:20:13	91.829	07/24/02 02:26:13	93.478	07/24/02 03:32:13	93.279
07/24/02 00:15:13	91.431	07/24/02 01:21:13	91.317	07/24/02 02:27:13	93.336	07/24/02 03:33:13	92.312
07/24/02 00:16:13	91.886	07/24/02 01:22:13	91.687	07/24/02 02:28:13	90.378	07/24/02 03:34:13	92.710
07/24/02 00:17:13	91.829	07/24/02 01:23:13	92.028	07/24/02 02:29:13	92.824	07/24/02 03:35:13	92.881
07/24/02 00:18:13	93.137	07/24/02 01:24:13	91.004	07/24/02 02:30:13	92.085	07/24/02 03:36:13	92.597
07/24/02 00:19:13	92.568	07/24/02 01:25:13	92.568	07/24/02 02:31:13	91.630	07/24/02 03:37:13	92.710
07/24/02 00:20:13	92.597	07/24/02 01:26:13	92.255	07/24/02 02:32:13	91.317	07/24/02 03:38:13	92.653
07/24/02 00:21:13	92.767	07/24/02 01:27:13	91.687	07/24/02 02:33:13	92.341	07/24/02 03:39:13	93.023
07/24/02 00:22:13	92.653	07/24/02 01:28:13	91.886	07/24/02 02:34:13	92.255	07/24/02 03:40:13	93.706
07/24/02 00:23:13	93.080	07/24/02 01:29:13	91.829	07/24/02 02:35:13	91.999	07/24/02 03:41:13	92.824
07/24/02 00:24:13	91.886	07/24/02 01:30:13	92.085	07/24/02 02:36:13	91.999	07/24/02 03:42:13	92.767
07/24/02 00:25:13	92.341	07/24/02 01:31:13	89.497	07/24/02 02:37:13	92.085	07/24/02 03:43:13	92.710
07/24/02 00:26:13	92.454	07/24/02 01:32:13	89.667	07/24/02 02:38:13	91.943	07/24/02 03:44:13	93.080
07/24/02 00:27:13	92.454	07/24/02 01:33:13	92.710	07/24/02 02:39:13	91.203	07/24/02 03:45:13	92.881
07/24/02 00:28:13	92.198	07/24/02 01:34:13	91.943	07/24/02 02:40:13	91.374	07/24/02 03:46:13	90.606
07/24/02 00:29:13	91.999	07/24/02 01:35:13	92.255	07/24/02 02:41:13	92.028	07/24/02 03:47:13	92.597
07/24/02 00:30:13	93.478	07/24/02 01:36:13	91.317	07/24/02 02:42:13	92.398	07/24/02 03:48:13	91.999
07/24/02 00:31:13	93.023	07/24/02 01:37:13	91.374	07/24/02 02:43:13	92.597	07/24/02 03:49:13	92.597
07/24/02 00:32:13	93.023	07/24/02 01:38:13	91.573	07/24/02 02:44:13	91.630	07/24/02 03:50:13	92.710
07/24/02 00:33:13	92.824	07/24/02 01:39:13	90.890	07/24/02 02:45:13	92.398	07/24/02 03:51:13	92.341
07/24/02 00:34:13	92.824	07/24/02 01:40:13	91.573	07/24/02 02:46:13	92.824	07/24/02 03:52:13	92.398
07/24/02 00:35:13	92.966	07/24/02 01:41:13	92.142	07/24/02 02:47:13	92.653	07/24/02 03:53:13	92.881
07/24/02 00:36:13	92.312	07/24/02 01:42:13	91.943	07/24/02 02:48:13	92.454	07/24/02 03:54:13	87.222
07/24/02 00:37:13	93.336	07/24/02 01:43:13	92.198	07/24/02 02:49:13	91.943	07/24/02 03:55:13	86.511
07/24/02 00:38:13	92.881	07/24/02 01:44:13	91.943	07/24/02 02:50:13	90.947	07/24/02 03:56:13	80.880
07/24/02 00:39:13	93.137	07/24/02 01:45:13	91.687	07/24/02 02:51:13	91.061	07/24/02 03:57:13	91.573
07/24/02 00:40:13	93.137	07/24/02 01:46:13	91.886	07/24/02 02:52:13	91.175	07/24/02 03:58:13	91.431
07/24/02 00:41:13	93.023	07/24/02 01:47:13	90.606	07/24/02 02:53:13	91.260	07/24/02 03:59:13	89.554
07/24/02 00:42:13	93.734	07/24/02 01:48:13	91.772	07/24/02 02:54:13	91.260	07/24/02 04:00:13	92.085
07/24/02 00:43:13	92.966	07/24/02 01:49:13	91.687	07/24/02 02:55:13	92.653	07/24/02 04:01:13	90.293
07/24/02 00:44:13	92.881	07/24/02 01:50:13	92.085	07/24/02 02:56:13	92.966	07/24/02 04:02:13	89.923
07/24/02 00:45:13	93.450	07/24/02 01:51:13	91.374	07/24/02 02:57:13	91.630	07/24/02 04:03:13	90.549
07/24/02 00:46:13	93.080	07/24/02 01:52:13	91.061	07/24/02 02:58:13	92.398	07/24/02 04:04:13	89.497
07/24/02 00:47:13	92.909	07/24/02 01:53:13	91.943	07/24/02 02:59:13	92.198	07/24/02 04:05:13	89.554
07/24/02 00:48:13	93.649	07/24/02 01:54:13	92.454	07/24/02 03:00:13	92.966	07/24/02 04:06:13	88.672
07/24/02 00:49:13	92.767	07/24/02 01:55:13	91.999	07/24/02 03:01:13	91.317	07/24/02 04:07:13	89.810
07/24/02 00:50:13	93.023	07/24/02 01:56:13	91.374	07/24/02 03:02:13	92.881	07/24/02 04:08:13	89.468
07/24/02 00:51:13	92.028	07/24/02 01:57:13	91.743	07/24/02 03:03:13	92.597	07/24/02 04:09:13	89.497
07/24/02 00:52:13	92.909	07/24/02 01:58:13	91.886	07/24/02 03:04:13	93.080	07/24/02 04:10:13	89.611
07/24/02 00:53:13	92.966	07/24/02 01:59:13	92.454	07/24/02 03:05:13	93.080	07/24/02 04:11:13	89.468
07/24/02 00:54:13	92.881	07/24/02 02:00:13	94.474	07/24/02 03:06:13	92.511	07/24/02 04:12:13	89.611
07/24/02 00:55:13	92.966	07/24/02 02:01:13	91.772	07/24/02 03:07:13	92.312	07/24/02 04:13:13	91.004

755 RIVER RD. - NO. 7555 cont.

Date Time	Pres (PSI)	Date Time	Pres (PSI)	Date Time	Pres (PSI)	Date Time	Pres (PSI
07/24/02 04:14:13	89.611	07/24/02 05:20:13	92.568	07/24/02 06:26:13	89.554	07/24/02 07:32:13	87.961
07/24/02 04:15:13	89.298	07/24/02 05:21:13	90.890	07/24/02 06:27:13	90.691	07/24/02 07:33:13	88.985
07/24/02 04:16:13	89.411	07/24/02 05:22:13	91.772	07/24/02 06:28:13	90.066	07/24/02 07:34:13	87.847
07/24/02 04:17:13	90.435	07/24/02 05:23:13	91.829	07/24/02 06:29:13	90.122	07/24/02 07:35:13	84.804
07/24/02 04:18:13	89.923	07/24/02 05:24:13	91.943	07/24/02 06:30:13	89.212	07/24/02 07:36:13	87.847
07/24/02 04:19:13	89.980	07/24/02 05:25:13	92.085	07/24/02 06:31:13	89.980	07/24/02 07:37:13	88.985
07/24/02 04:20:13	89.866	07/24/02 05:26:13	91.317	07/24/02 06:32:13	89.042	07/24/02 07:38:13	85.942
07/24/02 04:21:13	89.866	07/24/02 05:27:13	92.142	07/24/02 06:33:13	88.928	07/24/02 07:39:13	88.217
07/24/02 04:22:13	90.122	07/24/02 05:28:13	93.080	07/24/02 06:34:13	90.549	07/24/02 07:40:13	88.473
07/24/02 04:23:13	90.322	07/24/02 05:29:13	92.511	07/24/02 06:35:13	88.018	07/24/02 07:41:13	89.411
07/24/02 04:24:13	90.435	07/24/02 05:30:13	92.568	07/24/02 06:36:13	88.900	07/24/02 07:42:13	87.762
07/24/02 04:25:13	89.667	07/24/02 05:31:13	91.886	07/24/02 06:37:13	89.497	07/24/02 07:43:13	88.672
07/24/02 04:26:13	89.355	07/24/02 05:32:13	89.980	07/24/02 06:38:13	89.156	07/24/02 07:44:13	88.587
07/24/02 04:27:13	88.900	07/24/02 05:33:13	92.511	07/24/02 06:39:13	91.175	07/24/02 07:45:13	87.705
07/24/02 04:28:13	89.156	07/24/02 05:34:13	91.573	07/24/02 06:40:13	90.066	07/24/02 07:46:13	88.018
07/24/02 04:29:13	88.160	07/24/02 05:35:13	91.061	07/24/02 06:41:13	89.866	07/24/02 07:47:13	88.416
07/24/02 04:30:13	89.411	07/24/02 05:36:13	91.431	07/24/02 06:42:13	90.378	07/24/02 07:48:13	87.193
07/24/02 04:31:13	86.710	07/24/02 05:37:13	92.085	07/24/02 06:43:13	90.122	07/24/02 07:49:13	89.497
07/24/02 04:32:13	88.473	07/24/02 05:38:13	90.947	07/24/02 06:44:13	91.175	07/24/02 07:50:13	87.449
07/24/02 04:33:13	91.459	07/24/02 05:39:13	91.772	07/24/02 06:45:13	91.061	07/24/02 07:51:13	89.980
07/24/02 04:34:13	89.355	07/24/02 05:40:13	91.772	07/24/02 06:46:13	88.587	07/24/02 07:52:13	89.411
07/24/02 04:35:13	89.468	07/24/02 05:41:13	91.886	07/24/02 06:47:13	91.004	07/24/02 07:53:13	89.667
07/24/02 04:36:13	90.805	07/24/02 05:42:13	91.431	07/24/02 06:48:13	91.004	07/24/02 07:54:13	89.611
07/24/02 04:37:13	91.061	07/24/02 05:43:13	90.862	07/24/02 06:49:13	89.611	07/24/02 07:55:13	90.634
07/24/02 04:38:13	90.805	07/24/02 05:44:13	91.004	07/24/02 06:50:13	87.790	07/24/02 07:56:13	89.355
07/24/02 04:39:13	90.748	07/24/02 05:45:13	91.687	07/24/02 06:51:13	90.066	07/24/02 07:57:13	88.416
07/24/02 04:40:13	90.862	07/24/02 05:46:13	91.743	07/24/02 06:52:13	88.672	07/24/02 07:58:13	89.355
07/24/02 04:41:13	90.606	07/24/02 05:47:13	91.459	07/24/02 06:53:13	89.781	07/24/02 07:59:13	90.236
07/24/02 04:42:13	90.862	07/24/02 05:48:13	92.255	07/24/02 06:54:13	87.535	07/24/02 08:00:13	88.274
07/24/02 04:43:13	90.862	07/24/02 05:49:13	91.772	07/24/02 06:55:13	89.212	07/24/02 08:01:13	85.572
07/24/02 04:44:13	90.066	07/24/02 05:50:13	91.687	07/24/02 06:56:13	88.985	07/24/02 08:02:13	85.999
07/24/02 04:45:13	90.322	07/24/02 05:51:13	91.431	07/24/02 06:57:13	90.378	07/24/02 08:03:13	85.828
07/24/02 04:46:13	90.634	07/24/02 05:52:13	90.862	07/24/02 06:58:13	87.904	07/24/02 08:04:13	88.359
07/24/02 04:47:13	90.066	07/24/02 05:53:13	90.748	07/24/02 06:59:13	88.359	07/24/02 08:05:13	85.259
07/24/02 04:48:13	90.236	07/24/02 05:54:13	91.431	07/24/02 07:00:13	90.293	07/24/02 08:06:13	85.999
07/24/02 04:49:13	90.947	07/24/02 05:55:13	90.947	07/24/02 07:01:13	87.591	07/24/02 08:07:13	86.767
07/24/02 04:50:13	90.549	07/24/02 05:56:13	90.805	07/24/02 07:02:13	88.644	07/24/02 08:08:13	86.198
07/24/02 04:51:13	90.435	07/24/02 05:57:13	92.198	07/24/02 07:03:13	89.611	07/24/02 08:09:13	89.355
07/24/02 04:52:13	90.378	07/24/02 05:58:13	88.985	07/24/02 07:04:13	88.900	07/24/02 08:10:13	85.515
07/24/02 04:53:13	90.634	07/24/02 05:59:13	91.118	07/24/02 07:05:13	87.279	07/24/02 08:11:13	87.449
07/24/02 04:54:13	90.805	07/24/02 06:00:13	90.066	07/24/02 07:06:13	87.079	07/24/02 08:12:13	87.591
07/24/02 04:55:13	90.549	07/24/02 06:01:13	89.810	07/24/02 07:07:13	89.554	07/24/02 08:13:13	88.928
07/24/02 04:56:13	91.118	07/24/02 06:02:13	90.236	07/24/02 07:08:13	86.624	07/24/02 08:14:13	85.003
07/24/02 04:57:13	90.378	07/24/02 06:03:13	90.691	07/24/02 07:09:13	88.075	07/24/02 08:15:13	85.430
07/24/02 04:58:13	90.179	07/24/02 06:04:13	89.781	07/24/02 07:10:13	86.824	07/24/02 08:16:13	85.231
07/24/02 04:59:13	89.781	07/24/02 06:05:13	90.606	07/24/02 07:11:13	88.359	07/24/02 08:17:13	86.880
07/24/02 05:00:13	85.231	07/24/02 06:06:13	88.473	07/24/02 07:12:13	87.392	07/24/02 08:18:13	85.942
07/24/02 05:01:13	87.079	07/24/02 06:07:13	90.037	07/24/02 07:13:13	85.885	07/24/02 08:19:13	86.511
07/24/02 05:02:13	87.193	07/24/02 06:08:13	90.378	07/24/02 07:14:13	88.160	07/24/02 08:20:13	87.193
07/24/02 05:03:13	87.136	07/24/02 06:09:13	90.634	07/24/02 07:15:13	85.316	07/24/02 08:21:13	87.506
07/24/02 05:04:13	86.710	07/24/02 06:10:13	88.843	07/24/02 07:16:13	86.568	07/24/02 08:22:13	77.353
07/24/02 05:05:13	87.193	07/24/02 06:11:13	89.980	07/24/02 07:17:13	85.629	07/24/02 08:23:13	71.068
07/24/02 05:06:13	87.079	07/24/02 06:12:13	89.611	07/24/02 07:18:13	87.279	07/24/02 08:24:13	74.168
07/24/02 05:07:13	87.591	07/24/02 06:13:13	89.355	07/24/02 07:19:13	87.136	07/24/02 08:25:13	72.604
07/24/02 05:08:13	87.847	07/24/02 06:14:13	89.099	07/24/02 07:20:13	86.824	07/24/02 08:26:13	72.234
07/24/02 05:09:13	87.449	07/24/02 06:15:13	90.862	07/24/02 07:21:13	86.141	07/24/02 08:27:13	70.955
07/24/02 05:10:13	86.056	07/24/02 06:16:13	88.644	07/24/02 07:22:13	86.056	07/24/02 08:28:13	84.691
07/24/02 05:11:13	88.160	07/24/02 06:17:13	89.980	07/24/02 07:23:13	86.198	07/24/02 08:29:13	87.762
07/24/02 05:12:13	88.359	07/24/02 06:18:13	91.431	07/24/02 07:24:13	84.662	07/24/02 08:30:13	86.454
07/24/02 05:13:13	87.762	07/24/02 06:19:13	90.122	07/24/02 07:25:13	88.729	07/24/02 08:31:13	86.511
07/24/02 05:14:13	88.644	07/24/02 06:20:13	89.241	07/24/02 07:26:13	87.023	07/24/02 08:32:13	86.084
07/24/02 05:15:13	87.648	07/24/02 06:21:13	90.037	07/24/02 07:27:13	87.705	07/24/02 08:33:13	87.079
07/24/02 05:16:13	90.634	07/24/02 06:22:13	89.411	07/24/02 07:28:13	85.629	07/24/02 08:34:13	85.885
07/24/02 05:17:13	94.929	07/24/02 06:23:13	89.497	07/24/02 07:29:13	85.999	07/24/02 08:35:13	86.653
07/24/02 05:18:13	90.634	07/24/02 06:24:13	89.611	07/24/02 07:30:13	87.023	07/24/02 08:36:13	84.918
07/24/02 05:19:13	89.554	07/24/02 06:25:13	89.810	07/24/02 07:31:13	86.966	07/24/02 08:37:13	84.548

755 RIVER RD. - NO. 7555 cont.

Date	Time	Pres (PSI)
07/24/02	08:38:13	85.999
07/24/02	08:39:13	84.605
07/24/02	08:40:13	84.662
07/24/02	08:41:13	85.316
07/24/02	08:42:13	84.662
07/24/02	08:43:13	86.141
07/24/02	08:44:13	85.487
07/24/02	08:45:13	82.216
07/24/02	08:46:13	82.529
07/24/02	08:47:13	83.724
07/24/02	08:48:13	83.212
07/24/02	08:49:13	83.155
07/24/02	08:50:13	82.472
07/24/02	08:51:13	83.553
07/24/02	08:52:13	81.761
07/24/02	08:53:13	82.586
07/24/02	08:54:13	81.278
07/24/02	08:55:13	83.980
07/24/02	08:56:13	82.700
07/24/02	08:57:13	84.804
07/24/02	08:58:13	84.492
07/24/02	08:59:13	84.492
07/24/02	09:00:13	84.691
07/24/02	09:01:13	93.165
07/24/02	09:02:13	88.359
07/24/02	09:03:13	85.800
07/24/02	09:04:13	87.847
07/24/02	09:05:13	85.373
07/24/02	09:06:13	87.222
07/24/02	09:07:13	86.312
07/24/02	09:08:13	86.937
07/24/02	09:09:13	88.018
07/24/02	09:10:13	86.653
07/24/02	09:11:13	86.767
07/24/02	09:12:13	86.198
07/24/02	09:13:13	86.312
07/24/02	09:14:13	87.506
07/24/02	09:15:13	87.193
07/24/02	09:16:13	86.824
07/24/02	09:17:13	87.392
07/24/02	09:18:13	84.122
07/24/02	09:19:13	79.429
07/24/02	09:20:13	79.287
07/24/02	09:21:13	81.250
07/24/02	09:22:13	80.880
07/24/02	09:23:13	80.994
07/24/02	09:24:13	80.311
07/24/02	09:25:13	80.140
07/24/02	09:26:13	79.060
07/24/02	09:27:13	77.353
07/24/02	09:28:13	78.918
07/24/02	09:29:13	78.406
07/24/02	09:30:13	78.150
07/24/02	09:31:13	77.723
07/24/02	09:32:13	79.884
07/24/02	09:33:13	81.136
07/24/02	09:34:13	80.425
07/24/02	09:35:13	81.392
07/24/02	09:36:13	80.453
07/24/02	09:37:13	80.624
07/24/02	09:38:13	81.079
07/24/02	09:39:13	80.937
07/24/02	09:40:13	80.624
07/24/02	09:41:13	80.880
07/24/02	09:42:13	89.781
07/24/02	09:43:13	87.279
07/24/02	09:44:13	86.084
07/24/02	09:45:13	86.653
07/24/02	09:46:13	84.861
07/24/02	09:47:13	86.824
07/24/02	09:48:13	87.648
07/24/02	09:49:13	86.312
07/24/02	09:50:13	87.335
07/24/02	09:51:13	86.568
07/24/02	09:52:13	85.743
07/24/02	09:53:13	86.824
07/24/02	09:54:13	87.648
07/24/02	09:55:13	87.762
07/24/02	09:56:13	85.800
07/24/02	09:57:13	86.653
07/24/02	09:58:13	85.800
07/24/02	09:59:13	87.648
07/24/02	10:00:13	86.767
07/24/02	10:01:13	85.231
07/24/02	10:02:13	84.748
07/24/02	10:03:13	87.079
07/24/02	10:04:13	83.610
07/24/02	10:05:13	73.543
07/24/02	10:06:13	75.192
07/24/02	10:07:13	73.628
07/24/02	10:08:13	75.391
07/24/02	10:09:13	76.074
07/24/02	10:10:13	75.192
07/24/02	10:11:13	75.192
07/24/02	10:12:13	77.097
07/24/02	10:13:13	76.187
07/24/02	10:14:13	75.249
07/24/02	10:15:13	73.059
07/24/02	10:16:13	73.372
07/24/02	10:17:13	72.974
07/24/02	10:18:13	72.917
07/24/02	10:19:13	72.604
07/24/02	10:20:13	72.348
07/24/02	10:21:13	73.998
07/24/02	10:22:13	77.041
07/24/02	10:23:13	89.099
07/24/02	10:24:13	88.473
07/24/02	10:25:13	85.117
07/24/02	10:26:13	84.691
07/24/02	10:27:13	86.653
07/24/02	10:28:13	86.084
07/24/02	10:29:13	87.193
07/24/02	10:30:13	87.335
07/24/02	10:31:13	85.942
07/24/02	10:32:13	85.003
07/24/02	10:33:13	86.255
07/24/02	10:34:13	87.648
07/24/02	10:35:13	86.084
07/24/02	10:36:13	86.255
07/24/02	10:37:13	85.316
07/24/02	10:38:13	85.629
07/24/02	10:39:13	85.373
07/24/02	10:40:13	84.605
07/24/02	10:41:13	86.624
07/24/02	10:42:13	86.056
07/24/02	10:43:13	86.198
07/24/02	10:44:13	85.800
07/24/02	10:45:13	86.369
07/24/02	10:46:13	86.397
07/24/02	10:47:13	84.861
07/24/02	10:48:13	86.710
07/24/02	10:49:13	87.335
07/24/02	10:50:13	85.117
07/24/02	10:51:13	84.804
07/24/02	10:52:13	83.297
07/24/02	10:53:13	83.980
07/24/02	10:54:13	84.691
07/24/02	10:55:13	85.117
07/24/02	10:56:13	85.487
07/24/02	10:57:13	87.136
07/24/02	10:58:13	87.136
07/24/02	10:59:13	65.779
07/24/02	11:00:13	46.924
07/24/02	11:01:13	44.137
07/24/02	11:02:13	42.516
07/24/02	11:03:13	53.948
07/24/02	11:04:13	49.341
07/24/02	11:05:13	51.218
07/24/02	11:06:13	50.962
07/24/02	11:07:13	50.024
07/24/02	11:08:13	48.517
07/24/02	11:09:13	48.943
07/24/02	11:10:13	49.654
07/24/02	11:11:13	48.374
07/24/02	11:12:13	47.379
07/24/02	11:13:13	47.635
07/24/02	11:14:13	47.493
07/24/02	11:15:13	45.929
07/24/02	11:16:13	46.185
07/24/02	11:17:13	47.550
07/24/02	11:18:13	50.280
07/24/02	11:19:13	51.247
07/24/02	11:20:13	50.962
07/24/02	11:21:13	52.925
07/24/02	11:22:13	57.617
07/24/02	11:23:13	60.091
07/24/02	11:24:13	62.053
07/24/02	11:25:13	65.722
07/24/02	11:26:13	71.580
07/24/02	11:27:13	78.491
07/24/02	11:28:13	82.728
07/24/02	11:29:13	84.804
07/24/02	11:30:13	83.525
07/24/02	11:31:13	83.297
07/24/02	11:32:13	85.629
07/24/02	11:33:13	85.885
07/24/02	11:34:13	84.861
07/24/02	11:35:13	86.084
07/24/02	11:36:13	84.179
07/24/02	11:37:13	87.222
07/24/02	11:38:13	83.297
07/24/02	11:39:13	86.141
07/24/02	11:40:13	85.373
07/24/02	11:41:13	86.966
07/24/02	11:42:13	86.056
07/24/02	11:43:13	84.748
07/24/02	11:44:13	85.942
07/24/02	11:45:13	85.373
07/24/02	11:46:13	85.686
07/24/02	11:47:13	84.662
07/24/02	11:48:13	86.880
07/24/02	11:49:13	86.141
07/24/02	11:50:13	86.255
07/24/02	11:51:13	86.880
07/24/02	11:52:13	85.003
07/24/02	11:53:13	84.292
07/24/02	11:54:13	87.392
07/24/02	11:55:13	86.369
07/24/02	11:56:13	85.515
07/24/02	11:57:13	84.378
07/24/02	11:58:13	87.079
07/24/02	11:59:13	85.174
07/24/02	12:00:13	85.885
07/24/02	12:01:13	85.942
07/24/02	12:02:13	86.084
07/24/02	12:03:13	85.800
07/24/02	12:04:13	84.804
07/24/02	12:05:13	84.122
07/24/02	12:06:13	83.781
07/24/02	12:07:13	87.506
07/24/02	12:08:13	86.937
07/24/02	12:09:13	86.824
07/24/02	12:10:13	84.548
07/24/02	12:11:13	85.003
07/24/02	12:12:13	85.174
07/24/02	12:13:13	85.743
07/24/02	12:14:13	85.174
07/24/02	12:15:13	53.493
07/24/02	12:16:13	50.593
07/24/02	12:17:13	68.424
07/24/02	12:18:13	70.756
07/24/02	12:19:13	84.918
07/24/02	12:20:13	89.497
07/24/02	12:21:13	87.591
07/24/02	12:22:13	85.743
07/24/02	12:23:13	85.430
07/24/02	12:24:13	84.748
07/24/02	12:25:13	85.117
07/24/02	12:26:13	84.349
07/24/02	12:27:13	84.122
07/24/02	12:28:13	83.980
07/24/02	12:29:13	85.629
07/24/02	12:30:13	84.179
07/24/02	12:31:13	87.136
07/24/02	12:32:13	85.515
07/24/02	12:33:13	85.174
07/24/02	12:34:13	84.748
07/24/02	12:35:13	84.492
07/24/02	12:36:13	83.411
07/24/02	12:37:13	85.515
07/24/02	12:38:13	82.842
07/24/02	12:39:13	84.349
07/24/02	12:40:13	85.117
07/24/02	12:41:13	84.292
07/24/02	12:42:13	84.435
07/24/02	12:43:13	82.074
07/24/02	12:44:13	84.804
07/24/02	12:45:13	85.686
07/24/02	12:46:13	84.748
07/24/02	12:47:13	83.866
07/24/02	12:48:13	84.292
07/24/02	12:49:13	83.809
07/24/02	12:50:13	84.236
07/24/02	12:51:13	84.492
07/24/02	12:52:13	83.041
07/24/02	12:53:13	83.098
07/24/02	12:54:13	84.122
07/24/02	12:55:13	85.231
07/24/02	12:56:13	83.923
07/24/02	12:57:13	84.662
07/24/02	12:58:13	82.529
07/24/02	12:59:13	81.591
07/24/02	13:00:13	82.160
07/24/02	13:01:13	79.799

755 RIVER RD. - NO. 7555 cont.

Date	Time	Pres (PSI)
07/24/02	13:02:13	81.022
07/24/02	13:03:13	80.368
07/24/02	13:04:13	81.505
07/24/02	13:05:13	81.961
07/24/02	13:06:13	81.079
07/24/02	13:07:13	81.278
07/24/02	13:08:13	81.392
07/24/02	13:09:13	81.761
07/24/02	13:10:13	80.197
07/24/02	13:11:13	79.941
07/24/02	13:12:13	80.823
07/24/02	13:13:13	82.160
07/24/02	13:14:13	82.472
07/24/02	13:15:13	82.643
07/24/02	13:16:13	84.093
07/24/02	13:17:13	81.818
07/24/02	13:18:13	82.074
07/24/02	13:19:13	81.847
07/24/02	13:20:13	82.643
07/24/02	13:21:13	83.098
07/24/02	13:22:13	86.824
07/24/02	13:23:13	84.435
07/24/02	13:24:13	86.568
07/24/02	13:25:13	86.767
07/24/02	13:26:13	84.605
07/24/02	13:27:13	83.212
07/24/02	13:28:13	84.662
07/24/02	13:29:13	83.468
07/24/02	13:30:13	84.435
07/24/02	13:31:13	85.629
07/24/02	13:32:13	84.804
07/24/02	13:33:13	83.923
07/24/02	13:34:13	83.724
07/24/02	13:35:13	82.330
07/24/02	13:36:13	84.292
07/24/02	13:37:13	85.316
07/24/02	13:38:13	85.259
07/24/02	13:39:13	85.060
07/24/02	13:40:13	83.866
07/24/02	13:41:13	81.904
07/24/02	13:42:13	81.193
07/24/02	13:43:13	81.449
07/24/02	13:44:13	82.728
07/24/02	13:45:13	83.041
07/24/02	13:46:13	82.586
07/24/02	13:47:13	85.117
07/24/02	13:48:13	85.572
07/24/02	13:49:13	85.259
07/24/02	13:50:13	84.435
07/24/02	13:51:13	85.885
07/24/02	13:52:13	84.378
07/24/02	13:53:13	83.155
07/24/02	13:54:13	85.231
07/24/02	13:55:13	85.686
07/24/02	13:56:13	83.411
07/24/02	13:57:13	-0.341
07/24/02	13:58:13	-0.398
07/24/02	13:59:13	-0.398
07/24/02	14:00:13	-0.341
07/24/02	14:01:13	-0.398
07/24/02	14:02:13	-0.341
07/24/02	14:03:13	-0.398
07/24/02	14:04:13	-0.398
07/24/02	14:05:13	-0.341
07/24/02	14:06:13	-0.341
07/24/02	14:07:13	-0.341
07/24/02	14:08:13	-0.341
07/24/02	14:09:13	-0.284
07/24/02	14:10:13	-0.284
07/24/02	14:11:13	-0.284
07/24/02	14:12:13	-0.341
07/24/02	14:13:13	-0.284
07/24/02	14:14:13	-0.284
07/24/02	14:15:13	-0.284
07/24/02	14:16:13	-0.256
07/24/02	14:17:13	-0.256
07/24/02	14:18:13	-0.256
07/24/02	14:19:13	-0.284
07/24/02	14:20:13	-0.256
07/24/02	14:21:13	-0.284
07/24/02	14:22:13	-0.284
07/24/02	14:23:13	-0.284
07/24/02	14:24:13	-0.284
07/24/02	14:25:13	-0.256
07/24/02	14:26:13	-0.256
07/24/02	14:27:13	-0.256
07/24/02	14:28:13	-0.256
07/24/02	14:29:13	-0.256
07/24/02	14:30:13	-0.256
07/24/02	14:31:13	-0.256
07/24/02	14:32:13	-0.256
07/24/02	14:33:13	-0.284
07/24/02	14:34:13	-0.284
07/24/02	14:35:13	-0.284
07/24/02	14:36:13	-0.284
07/24/02	14:37:13	-0.284
07/24/02	14:38:13	-0.284
07/24/02	14:39:13	-0.284
07/24/02	14:40:13	-0.284
07/24/02	14:41:13	-0.284
07/24/02	14:42:13	-0.256
07/24/02	14:43:13	-0.284
07/24/02	14:44:13	-0.256
07/24/02	14:45:13	-0.284
07/24/02	14:46:13	-0.256
07/24/02	14:47:13	-0.284
07/24/02	14:48:13	-0.256
07/24/02	14:49:13	-0.284
07/24/02	14:50:13	-0.284
07/24/02	14:51:13	-0.284
07/24/02	14:52:13	-0.284
07/24/02	14:53:13	-0.284
07/24/02	14:54:13	-0.284
07/24/02	14:55:13	-0.284
07/24/02	14:56:13	-0.284
07/24/02	14:57:13	-0.256
07/24/02	14:58:13	-0.256
07/24/02	14:59:13	-0.284
07/24/02	15:00:13	-0.284
07/24/02	15:01:13	-0.256
07/24/02	15:02:13	-0.256
07/24/02	15:03:13	-0.256
07/24/02	15:04:13	-0.199
07/24/02	15:05:13	-0.199
07/24/02	15:06:13	-0.256
07/24/02	15:07:13	-0.199
07/24/02	15:08:13	-0.199
07/24/02	15:09:13	-0.199
07/24/02	15:10:13	-0.199
07/24/02	15:11:13	-0.199
07/24/02	15:12:13	-0.199
07/24/02	15:13:13	-0.256
07/24/02	15:14:13	-0.256
07/24/02	15:15:13	-0.256
07/24/02	15:16:13	-0.199
07/24/02	15:17:13	-0.199
07/24/02	15:18:13	-0.199
07/24/02	15:19:13	-0.199
07/24/02	15:20:13	-0.199
07/24/02	15:21:13	-0.199
07/24/02	15:22:13	-0.199
07/24/02	15:23:13	-0.199
07/24/02	15:24:13	-0.199
07/24/02	15:25:13	-0.199
07/24/02	15:26:13	-0.199
07/24/02	15:27:13	-0.199
07/24/02	15:28:13	-0.199
07/24/02	15:29:13	-0.256
07/24/02	15:30:13	-0.199
07/24/02	15:31:13	-0.199
07/24/02	15:32:13	-0.199
07/24/02	15:33:13	-0.199
07/24/02	15:34:13	-0.199
07/24/02	15:35:13	-0.142
07/24/02	15:36:13	-0.142
07/24/02	15:37:13	-0.199
07/24/02	15:38:13	-0.199
07/24/02	15:39:13	-0.142

AQUARENA SPRINGS AND UHLAND - NO. 6792

Date	Time	Pres (PSI)
07/22/02	13:36:54	-0.028
07/22/02	13:37:54	0.028
07/22/02	13:38:54	0.028
07/22/02	13:39:54	0.028
07/22/02	13:40:54	0.028
07/22/02	13:41:54	0.028
07/22/02	13:42:54	-0.028
07/22/02	13:43:54	-0.028
07/22/02	13:44:54	0.057
07/22/02	13:45:54	0.028
07/22/02	13:46:54	0.114
07/22/02	13:47:54	0.114
07/22/02	13:48:54	0.085
07/22/02	13:49:54	0.114
07/22/02	13:50:54	0.028
07/22/02	13:51:54	0.000
07/22/02	13:52:54	0.114
07/22/02	13:53:54	0.142
07/22/02	13:54:54	0.199
07/22/02	13:55:54	0.199
07/22/02	13:56:54	0.284
07/22/02	13:57:54	0.341
07/22/02	13:58:54	0.341
07/22/02	13:59:54	0.341
07/22/02	14:00:54	0.398
07/22/02	14:01:54	0.398
07/22/02	14:02:54	0.341
07/22/02	14:03:54	0.398
07/22/02	14:04:54	0.313
07/22/02	14:05:54	0.341
07/22/02	14:06:54	0.341
07/22/02	14:07:54	0.256
07/22/02	14:08:54	0.313
07/22/02	14:09:54	0.341
07/22/02	14:10:54	0.341
07/22/02	14:11:54	0.284
07/22/02	14:12:54	0.341
07/22/02	14:13:54	0.341
07/22/02	14:14:54	0.313
07/22/02	14:15:54	0.284
07/22/02	14:16:54	0.313
07/22/02	14:17:54	0.284
07/22/02	14:18:54	0.256
07/22/02	14:19:54	0.284
07/22/02	14:20:54	0.256
07/22/02	14:21:54	71.637
07/22/02	14:22:54	65.068
07/22/02	14:23:54	70.699
07/22/02	14:24:54	66.945
07/22/02	14:25:54	71.182
07/22/02	14:26:54	71.410
07/22/02	14:27:54	70.471
07/22/02	14:28:54	72.121
07/22/02	14:29:54	69.959
07/22/02	14:30:54	72.234
07/22/02	14:31:54	72.889
07/22/02	14:32:54	46.668
07/22/02	14:33:54	46.725
07/22/02	14:34:54	45.331
07/22/02	14:35:54	45.417
07/22/02	14:36:54	46.668
07/22/02	14:37:54	47.948
07/22/02	14:38:54	46.327
07/22/02	14:39:54	45.388
07/22/02	14:40:54	46.753
07/22/02	14:41:54	46.042
07/22/02	14:42:54	47.237
07/22/02	14:43:54	46.213
07/22/02	14:44:54	46.099
07/22/02	14:45:54	45.644
07/22/02	14:46:54	44.819
07/22/02	14:47:54	45.587
07/22/02	14:48:54	47.237
07/22/02	14:49:54	47.464
07/22/02	14:50:54	47.066
07/22/02	14:51:54	46.497
07/22/02	14:52:54	47.493
07/22/02	14:53:54	47.009
07/22/02	14:54:54	45.417
07/22/02	14:55:54	47.009
07/22/02	14:56:54	43.796
07/22/02	14:57:54	44.905
07/22/02	14:58:54	47.208
07/22/02	14:59:54	46.128
07/22/02	15:00:54	44.194
07/22/02	15:01:54	44.677
07/22/02	15:02:54	38.335
07/22/02	15:03:54	34.837
07/22/02	15:04:54	37.454
07/22/02	15:05:54	36.970
07/22/02	15:06:54	35.065
07/22/02	15:07:54	34.951
07/22/02	15:08:54	34.439
07/22/02	15:09:54	42.459
07/22/02	15:10:54	48.033
07/22/02	15:11:54	45.985
07/22/02	15:12:54	47.521
07/22/02	15:13:54	46.896
07/22/02	15:14:54	45.275
07/22/02	15:15:54	44.905
07/22/02	15:16:54	46.128
07/22/02	15:17:54	45.872
07/22/02	15:18:54	42.488
07/22/02	15:19:54	47.123
07/22/02	15:20:54	46.071
07/22/02	15:21:54	46.896
07/22/02	15:22:54	48.090
07/22/02	15:23:54	47.464
07/22/02	15:24:54	47.948
07/22/02	15:25:54	46.156
07/22/02	15:26:54	38.421
07/22/02	15:27:54	37.340
07/22/02	15:28:54	37.994
07/22/02	15:29:54	36.288
07/22/02	15:30:54	36.714
07/22/02	15:31:54	33.927
07/22/02	15:32:54	37.738
07/22/02	15:33:54	44.962
07/22/02	15:34:54	47.692
07/22/02	15:35:54	48.545
07/22/02	15:36:54	50.166
07/22/02	15:37:54	49.171
07/22/02	15:38:54	49.597
07/22/02	15:39:54	50.024
07/22/02	15:40:54	48.289
07/22/02	15:41:54	48.175
07/22/02	15:42:54	47.976
07/22/02	15:43:54	48.972
07/22/02	15:44:54	49.341
07/22/02	15:45:54	69.220
07/22/02	15:46:54	73.628
07/22/02	15:47:54	71.637
07/22/02	15:48:54	73.514
07/22/02	15:49:54	74.339
07/22/02	15:50:54	74.993
07/22/02	15:51:54	75.761
07/22/02	15:52:54	75.391
07/22/02	15:53:54	72.689
07/22/02	15:54:54	73.742
07/22/02	15:55:54	72.434
07/22/02	15:56:54	73.941
07/22/02	15:57:54	72.092
07/22/02	15:58:54	69.618
07/22/02	15:59:54	72.064
07/22/02	16:00:54	69.618
07/22/02	16:01:54	69.561
07/22/02	16:02:54	69.618
07/22/02	16:03:54	71.779
07/22/02	16:04:54	71.353
07/22/02	16:05:54	72.007
07/22/02	16:06:54	69.504
07/22/02	16:07:54	69.447
07/22/02	16:08:54	70.898
07/22/02	16:09:54	72.917
07/22/02	16:10:54	71.723
07/22/02	16:11:54	73.912
07/22/02	16:12:54	71.552
07/22/02	16:13:54	70.215
07/22/02	16:14:54	68.793
07/22/02	16:15:54	72.007
07/22/02	16:16:54	68.225
07/22/02	16:17:54	71.182
07/22/02	16:18:54	70.784
07/22/02	16:19:54	70.016
07/22/02	16:20:54	73.742
07/22/02	16:21:54	71.296
07/22/02	16:22:54	72.945
07/22/02	16:23:54	66.888
07/22/02	16:24:54	69.732
07/22/02	16:25:54	70.471
07/22/02	16:26:54	67.599
07/22/02	16:27:54	70.898
07/22/02	16:28:54	73.400
07/22/02	16:29:54	70.130
07/22/02	16:30:54	71.182
07/22/02	16:31:54	73.201
07/22/02	16:32:54	70.244
07/22/02	16:33:54	69.760
07/22/02	16:34:54	72.519
07/22/02	16:35:54	72.889
07/22/02	16:36:54	72.832
07/22/02	16:37:54	69.504
07/22/02	16:38:54	72.263
07/22/02	16:39:54	69.789
07/22/02	16:40:54	65.551
07/22/02	16:41:54	72.519
07/22/02	16:42:54	73.088
07/22/02	16:43:54	69.988
07/22/02	16:44:54	72.974
07/22/02	16:45:54	73.315
07/22/02	16:46:54	76.785
07/22/02	16:47:54	71.637
07/22/02	16:48:54	74.111
07/22/02	16:49:54	72.689
07/22/02	16:50:54	72.064
07/22/02	16:51:54	72.718
07/22/02	16:52:54	73.002
07/22/02	16:53:54	75.533
07/22/02	16:54:54	72.035
07/22/02	16:55:54	72.576
07/22/02	16:56:54	73.031
07/22/02	16:57:54	66.035
07/22/02	16:58:54	70.898
07/22/02	16:59:54	70.926
07/22/02	17:00:54	67.002
07/22/02	17:01:54	70.926
07/22/02	17:02:54	70.955
07/22/02	17:03:54	70.329
07/22/02	17:04:54	69.277
07/22/02	17:05:54	71.381
07/22/02	17:06:54	70.613
07/22/02	17:07:54	71.410
07/22/02	17:08:54	70.102
07/22/02	17:09:54	72.775
07/22/02	17:10:54	69.618
07/22/02	17:11:54	74.794
07/22/02	17:12:54	73.315
07/22/02	17:13:54	67.997
07/22/02	17:14:54	71.097
07/22/02	17:15:54	70.357
07/22/02	17:16:54	71.410
07/22/02	17:17:54	69.988
07/22/02	17:18:54	72.689
07/22/02	17:19:54	75.391
07/22/02	17:20:54	72.519
07/22/02	17:21:54	73.002
07/22/02	17:22:54	68.992
07/22/02	17:23:54	70.357
07/22/02	17:24:54	71.410
07/22/02	17:25:54	73.230
07/22/02	17:26:54	70.158
07/22/02	17:27:54	75.277
07/22/02	17:28:54	72.092
07/22/02	17:29:54	71.097
07/22/02	17:30:54	75.107
07/22/02	17:31:54	75.135
07/22/02	17:32:54	74.595
07/22/02	17:33:54	74.851
07/22/02	17:34:54	71.353
07/22/02	17:35:54	72.149
07/22/02	17:36:54	70.670
07/22/02	17:37:54	71.324
07/22/02	17:38:54	71.495
07/22/02	17:39:54	71.381
07/22/02	17:40:54	70.016
07/22/02	17:41:54	70.869
07/22/02	17:42:54	72.007
07/22/02	17:43:54	70.443
07/22/02	17:44:54	73.031
07/22/02	17:45:54	69.106
07/22/02	17:46:54	69.647
07/22/02	17:47:54	72.547
07/22/02	17:48:54	70.471
07/22/02	17:49:54	70.130
07/22/02	17:50:54	72.889
07/22/02	17:51:54	72.035
07/22/02	17:52:54	72.121
07/22/02	17:53:54	72.889
07/22/02	17:54:54	71.666
07/22/02	17:55:54	73.031
07/22/02	17:56:54	70.557
07/22/02	17:57:54	71.040
07/22/02	17:58:54	69.447
07/22/02	17:59:54	69.106

AQUARENA SPRINGS AND UHLAND - NO. 6792 cont.

Date	Time	Pres (PSI)
07/22/02	18:00:54	71.268
07/22/02	18:01:54	67.428
07/22/02	18:02:54	70.102
07/22/02	18:03:54	64.983
07/22/02	18:04:54	69.561
07/22/02	18:05:54	68.310
07/22/02	18:06:54	66.205
07/22/02	18:07:54	69.902
07/22/02	18:08:54	72.149
07/22/02	18:09:54	70.500
07/22/02	18:10:54	73.742
07/22/02	18:11:54	70.329
07/22/02	18:12:54	71.495
07/22/02	18:13:54	70.500
07/22/02	18:14:54	69.049
07/22/02	18:15:54	72.519
07/22/02	18:16:54	69.647
07/22/02	18:17:54	72.064
07/22/02	18:18:54	71.324
07/22/02	18:19:54	67.599
07/22/02	18:20:54	71.068
07/22/02	18:21:54	70.272
07/22/02	18:22:54	70.642
07/22/02	18:23:54	71.893
07/22/02	18:24:54	69.760
07/22/02	18:25:54	71.808
07/22/02	18:26:54	70.357
07/22/02	18:27:54	69.874
07/22/02	18:28:54	68.936
07/22/02	18:29:54	71.324
07/22/02	18:30:54	69.902
07/22/02	18:31:54	72.234
07/22/02	18:32:54	70.727
07/22/02	18:33:54	70.130
07/22/02	18:34:54	68.793
07/22/02	18:35:54	70.898
07/22/02	18:36:54	55.512
07/22/02	18:37:54	54.517
07/22/02	18:38:54	59.352
07/22/02	18:39:54	58.243
07/22/02	18:40:54	57.077
07/22/02	18:41:54	58.356
07/22/02	18:42:54	67.627
07/22/02	18:43:54	68.509
07/22/02	18:44:54	69.163
07/22/02	18:45:54	69.817
07/22/02	18:46:54	70.784
07/22/02	18:47:54	71.324
07/22/02	18:48:54	65.523
07/22/02	18:49:54	68.281
07/22/02	18:50:54	68.225
07/22/02	18:51:54	69.902
07/22/02	18:52:54	66.916
07/22/02	18:53:54	69.988
07/22/02	18:54:54	69.391
07/22/02	18:55:54	67.798
07/22/02	18:56:54	69.533
07/22/02	18:57:54	67.457
07/22/02	18:58:54	68.566
07/22/02	18:59:54	68.793
07/22/02	19:00:54	64.357
07/22/02	19:01:54	67.940
07/22/02	19:02:54	64.528
07/22/02	19:03:54	67.371
07/22/02	19:04:54	63.390
07/22/02	19:05:54	64.129
07/22/02	19:06:54	65.722
07/22/02	19:07:54	63.106
07/22/02	19:08:54	66.348
07/22/02	19:09:54	67.599
07/22/02	19:10:54	65.580
07/22/02	19:11:54	73.372
07/22/02	19:12:54	70.215
07/22/02	19:13:54	70.102
07/22/02	19:14:54	69.760
07/22/02	19:15:54	70.386
07/22/02	19:16:54	70.869
07/22/02	19:17:54	69.618
07/22/02	19:18:54	68.452
07/22/02	19:19:54	68.111
07/22/02	19:20:54	68.992
07/22/02	19:21:54	66.518
07/22/02	19:22:54	70.102
07/22/02	19:23:54	68.367
07/22/02	19:24:54	65.893
07/22/02	19:25:54	68.082
07/22/02	19:26:54	66.262
07/22/02	19:27:54	71.637
07/22/02	19:28:54	70.357
07/22/02	19:29:54	68.964
07/22/02	19:30:54	66.945
07/22/02	19:31:54	69.959
07/22/02	19:32:54	68.879
07/22/02	19:33:54	68.879
07/22/02	19:34:54	64.186
07/22/02	19:35:54	67.883
07/22/02	19:36:54	66.035
07/22/02	19:37:54	69.334
07/22/02	19:38:54	65.494
07/22/02	19:39:54	68.225
07/22/02	19:40:54	69.277
07/22/02	19:41:54	67.570
07/22/02	19:42:54	69.675
07/22/02	19:43:54	66.746
07/22/02	19:44:54	69.106
07/22/02	19:45:54	65.068
07/22/02	19:46:54	70.471
07/22/02	19:47:54	68.793
07/22/02	19:48:54	66.348
07/22/02	19:49:54	65.068
07/22/02	19:50:54	71.296
07/22/02	19:51:54	69.049
07/22/02	19:52:54	68.566
07/22/02	19:53:54	66.973
07/22/02	19:54:54	68.509
07/22/02	19:55:54	69.248
07/22/02	19:56:54	68.651
07/22/02	19:57:54	68.281
07/22/02	19:58:54	69.760
07/22/02	19:59:54	70.670
07/22/02	20:00:54	70.045
07/22/02	20:01:54	67.883
07/22/02	20:02:54	65.494
07/22/02	20:03:54	69.220
07/22/02	20:04:54	68.481
07/22/02	20:05:54	69.447
07/22/02	20:06:54	69.334
07/22/02	20:07:54	67.798
07/22/02	20:08:54	68.651
07/22/02	20:09:54	67.883
07/22/02	20:10:54	66.547
07/22/02	20:11:54	68.623
07/22/02	20:12:54	64.670
07/22/02	20:13:54	67.599
07/22/02	20:14:54	67.002
07/22/02	20:15:54	68.054
07/22/02	20:16:54	66.234
07/22/02	20:17:54	68.623
07/22/02	20:18:54	66.518
07/22/02	20:19:54	70.869
07/22/02	20:20:54	69.391
07/22/02	20:21:54	69.419
07/22/02	20:22:54	69.419
07/22/02	20:23:54	67.514
07/22/02	20:24:54	69.106
07/22/02	20:25:54	67.201
07/22/02	20:26:54	66.035
07/22/02	20:27:54	67.428
07/22/02	20:28:54	69.049
07/22/02	20:29:54	71.410
07/22/02	20:30:54	70.102
07/22/02	20:31:54	66.945
07/22/02	20:32:54	68.281
07/22/02	20:33:54	69.391
07/22/02	20:34:54	67.855
07/22/02	20:35:54	69.419
07/22/02	20:36:54	66.376
07/22/02	20:37:54	67.428
07/22/02	20:38:54	67.457
07/22/02	20:39:54	66.461
07/22/02	20:40:54	66.547
07/22/02	20:41:54	67.315
07/22/02	20:42:54	66.490
07/22/02	20:43:54	66.433
07/22/02	20:44:54	68.850
07/22/02	20:45:54	69.163
07/22/02	20:46:54	67.855
07/22/02	20:47:54	67.912
07/22/02	20:48:54	65.381
07/22/02	20:49:54	66.205
07/22/02	20:50:54	61.996
07/22/02	20:51:54	66.632
07/22/02	20:52:54	70.244
07/22/02	20:53:54	68.992
07/22/02	20:54:54	66.604
07/22/02	20:55:54	68.139
07/22/02	20:56:54	66.632
07/22/02	20:57:54	67.286
07/22/02	20:58:54	68.594
07/22/02	20:59:54	67.798
07/22/02	21:00:54	71.836
07/22/02	21:01:54	69.334
07/22/02	21:02:54	66.433
07/22/02	21:03:54	63.191
07/22/02	21:04:54	66.035
07/22/02	21:05:54	65.580
07/22/02	21:06:54	69.163
07/22/02	21:07:54	68.281
07/22/02	21:08:54	66.746
07/22/02	21:09:54	67.087
07/22/02	21:10:54	67.002
07/22/02	21:11:54	66.660
07/22/02	21:12:54	66.006
07/22/02	21:13:54	67.883
07/22/02	21:14:54	66.291
07/22/02	21:15:54	65.580
07/22/02	21:16:54	67.855
07/22/02	21:17:54	62.679
07/22/02	21:18:54	66.973
07/22/02	21:19:54	67.883
07/22/02	21:20:54	65.324
07/22/02	21:21:54	65.039
07/22/02	21:22:54	67.570
07/22/02	21:23:54	67.656
07/22/02	21:24:54	69.021
07/22/02	21:25:54	68.879
07/22/02	21:26:54	67.997
07/22/02	21:27:54	67.542
07/22/02	21:28:54	65.523
07/22/02	21:29:54	65.949
07/22/02	21:30:54	66.945
07/22/02	21:31:54	69.220
07/22/02	21:32:54	66.604
07/22/02	21:33:54	64.300
07/22/02	21:34:54	69.391
07/22/02	21:35:54	64.414
07/22/02	21:36:54	66.632
07/22/02	21:37:54	68.481
07/22/02	21:38:54	66.006
07/22/02	21:39:54	67.371
07/22/02	21:40:54	67.172
07/22/02	21:41:54	65.893
07/22/02	21:42:54	68.026
07/22/02	21:43:54	67.855
07/22/02	21:44:54	65.324
07/22/02	21:45:54	68.026
07/22/02	21:46:54	70.613
07/22/02	21:47:54	68.594
07/22/02	21:48:54	68.253
07/22/02	21:49:54	68.623
07/22/02	21:50:54	69.760
07/22/02	21:51:54	68.992
07/22/02	21:52:54	71.438
07/22/02	21:53:54	70.841
07/22/02	21:54:54	71.495
07/22/02	21:55:54	70.244
07/22/02	21:56:54	68.111
07/22/02	21:57:54	69.988
07/22/02	21:58:54	66.660
07/22/02	21:59:54	71.268
07/22/02	22:00:54	71.609
07/22/02	22:01:54	66.433
07/22/02	22:02:54	67.229
07/22/02	22:03:54	69.817
07/22/02	22:04:54	68.708
07/22/02	22:05:54	66.006
07/22/02	22:06:54	48.403
07/22/02	22:07:54	51.218
07/22/02	22:08:54	54.432
07/22/02	22:09:54	63.447
07/22/02	22:10:54	67.684
07/22/02	22:11:54	65.381
07/22/02	22:12:54	66.035
07/22/02	22:13:54	64.755
07/22/02	22:14:54	65.068
07/22/02	22:15:54	65.750
07/22/02	22:16:54	65.665
07/22/02	22:17:54	65.949
07/22/02	22:18:54	65.893
07/22/02	22:19:54	64.186
07/22/02	22:20:54	68.168
07/22/02	22:21:54	66.149
07/22/02	22:22:54	69.334
07/22/02	22:23:54	68.566

AQUARENA SPRINGS AND UHLAND - NO. 6792 cont.

Date	Time	Pres (PSI)
07/22/02	22:24:54	68.793
07/22/02	22:25:54	69.049
07/22/02	22:26:54	68.082
07/22/02	22:27:54	68.708
07/22/02	22:28:54	68.509
07/22/02	22:29:54	69.760
07/22/02	22:30:54	70.727
07/22/02	22:31:54	70.813
07/22/02	22:32:54	66.120
07/22/02	22:33:54	71.324
07/22/02	22:34:54	69.647
07/22/02	22:35:54	70.215
07/22/02	22:36:54	70.983
07/22/02	22:37:54	72.291
07/22/02	22:38:54	73.855
07/22/02	22:39:54	71.666
07/22/02	22:40:54	69.447
07/22/02	22:41:54	72.434
07/22/02	22:42:54	71.097
07/22/02	22:43:54	73.287
07/22/02	22:44:54	72.689
07/22/02	22:45:54	70.727
07/22/02	22:46:54	71.410
07/22/02	22:47:54	72.320
07/22/02	22:48:54	72.320
07/22/02	22:49:54	73.173
07/22/02	22:50:54	74.396
07/22/02	22:51:54	72.064
07/22/02	22:52:54	73.941
07/22/02	22:53:54	74.680
07/22/02	22:54:54	49.199
07/22/02	22:55:54	58.669
07/22/02	22:56:54	63.191
07/22/02	22:57:54	61.286
07/22/02	22:58:54	60.859
07/22/02	22:59:54	61.001
07/22/02	23:00:54	65.494
07/22/02	23:01:54	70.130
07/22/02	23:02:54	69.675
07/22/02	23:03:54	69.874
07/22/02	23:04:54	71.523
07/22/02	23:05:54	71.040
07/22/02	23:06:54	69.817
07/22/02	23:07:54	70.500
07/22/02	23:08:54	71.836
07/22/02	23:09:54	69.760
07/22/02	23:10:54	70.955
07/22/02	23:11:54	71.580
07/22/02	23:12:54	68.481
07/22/02	23:13:54	71.723
07/22/02	23:14:54	70.443
07/22/02	23:15:54	71.751
07/22/02	23:16:54	70.471
07/22/02	23:17:54	69.959
07/22/02	23:18:54	73.031
07/22/02	23:19:54	72.832
07/22/02	23:20:54	72.206
07/22/02	23:21:54	70.670
07/22/02	23:22:54	70.670
07/22/02	23:23:54	71.068
07/22/02	23:24:54	71.068
07/22/02	23:25:54	71.666
07/22/02	23:26:54	72.746
07/22/02	23:27:54	73.144
07/22/02	23:28:54	73.514
07/22/02	23:29:54	72.434
07/22/02	23:30:54	71.751
07/22/02	23:31:54	71.182
07/22/02	23:32:54	70.443
07/22/02	23:33:54	70.898
07/22/02	23:34:54	69.874
07/22/02	23:35:54	71.552
07/22/02	23:36:54	70.585
07/22/02	23:37:54	75.021
07/22/02	23:38:54	71.808
07/22/02	23:39:54	74.310
07/22/02	23:40:54	74.083
07/22/02	23:41:54	74.623
07/22/02	23:42:54	75.050
07/22/02	23:43:54	74.396
07/22/02	23:44:54	72.718
07/22/02	23:45:54	74.680
07/22/02	23:46:54	74.993
07/22/02	23:47:54	74.623
07/22/02	23:48:54	74.908
07/22/02	23:49:54	73.827
07/22/02	23:50:54	74.197
07/22/02	23:51:54	72.377
07/22/02	23:52:54	77.666
07/22/02	23:53:54	78.690
07/22/02	23:54:54	75.562
07/22/02	23:55:54	75.875
07/22/02	23:56:54	73.400
07/22/02	23:57:54	75.704
07/22/02	23:58:54	76.187
07/22/02	23:59:54	76.870
07/23/02	00:00:54	76.529
07/23/02	00:01:54	76.045
07/23/02	00:02:54	74.367
07/23/02	00:03:54	74.709
07/23/02	00:04:54	76.927
07/23/02	00:05:54	77.496
07/23/02	00:06:54	76.244
07/23/02	00:07:54	76.415
07/23/02	00:08:54	75.960
07/23/02	00:09:54	77.609
07/23/02	00:10:54	75.988
07/23/02	00:11:54	75.732
07/23/02	00:12:54	76.785
07/23/02	00:13:54	79.629
07/23/02	00:14:54	78.093
07/23/02	00:15:54	78.320
07/23/02	00:16:54	78.349
07/23/02	00:17:54	78.292
07/23/02	00:18:54	79.088
07/23/02	00:19:54	77.695
07/23/02	00:20:54	78.207
07/23/02	00:21:54	75.761
07/23/02	00:22:54	77.097
07/23/02	00:23:54	78.690
07/23/02	00:24:54	77.638
07/23/02	00:25:54	76.756
07/23/02	00:26:54	76.898
07/23/02	00:27:54	76.927
07/23/02	00:28:54	78.406
07/23/02	00:29:54	76.330
07/23/02	00:30:54	78.434
07/23/02	00:31:54	76.557
07/23/02	00:32:54	76.984
07/23/02	00:33:54	77.723
07/23/02	00:34:54	77.268
07/23/02	00:35:54	77.012
07/23/02	00:36:54	77.154
07/23/02	00:37:54	79.088
07/23/02	00:38:54	79.913
07/23/02	00:39:54	78.690
07/23/02	00:40:54	79.941
07/23/02	00:41:54	78.349
07/23/02	00:42:54	77.894
07/23/02	00:43:54	78.804
07/23/02	00:44:54	76.870
07/23/02	00:45:54	75.363
07/23/02	00:46:54	78.406
07/23/02	00:47:54	78.889
07/23/02	00:48:54	80.169
07/23/02	00:49:54	78.576
07/23/02	00:50:54	80.027
07/23/02	00:51:54	79.742
07/23/02	00:52:54	79.941
07/23/02	00:53:54	79.486
07/23/02	00:54:54	77.894
07/23/02	00:55:54	80.027
07/23/02	00:56:54	79.941
07/23/02	00:57:54	78.918
07/23/02	00:58:54	76.898
07/23/02	00:59:54	78.121
07/23/02	01:00:54	78.548
07/23/02	01:01:54	79.031
07/23/02	01:02:54	77.268
07/23/02	01:03:54	78.918
07/23/02	01:04:54	78.690
07/23/02	01:05:54	78.605
07/23/02	01:06:54	78.662
07/23/02	01:07:54	78.605
07/23/02	01:08:54	79.344
07/23/02	01:09:54	80.396
07/23/02	01:10:54	78.918
07/23/02	01:11:54	81.705
07/23/02	01:12:54	72.689
07/23/02	01:13:54	76.102
07/23/02	01:14:54	74.766
07/23/02	01:15:54	81.961
07/23/02	01:16:54	78.320
07/23/02	01:17:54	78.747
07/23/02	01:18:54	78.406
07/23/02	01:19:54	78.662
07/23/02	01:20:54	79.458
07/23/02	01:21:54	79.941
07/23/02	01:22:54	79.629
07/23/02	01:23:54	78.463
07/23/02	01:24:54	79.202
07/23/02	01:25:54	79.600
07/23/02	01:26:54	78.320
07/23/02	01:27:54	77.723
07/23/02	01:28:54	79.970
07/23/02	01:29:54	80.283
07/23/02	01:30:54	78.861
07/23/02	01:31:54	79.998
07/23/02	01:32:54	77.638
07/23/02	01:33:54	79.941
07/23/02	01:34:54	79.941
07/23/02	01:35:54	80.795
07/23/02	01:36:54	78.605
07/23/02	01:37:54	80.140
07/23/02	01:38:54	79.856
07/23/02	01:39:54	79.685
07/23/02	01:40:54	80.453
07/23/02	01:41:54	79.970
07/23/02	01:42:54	80.624
07/23/02	01:43:54	80.197
07/23/02	01:44:54	79.742
07/23/02	01:45:54	80.226
07/23/02	01:46:54	80.226
07/23/02	01:47:54	80.283
07/23/02	01:48:54	79.344
07/23/02	01:49:54	80.311
07/23/02	01:50:54	79.941
07/23/02	01:51:54	80.766
07/23/02	01:52:54	81.107
07/23/02	01:53:54	81.363
07/23/02	01:54:54	81.534
07/23/02	01:55:54	81.022
07/23/02	01:56:54	80.880
07/23/02	01:57:54	80.851
07/23/02	01:58:54	80.453
07/23/02	01:59:54	79.145
07/23/02	02:00:54	79.771
07/23/02	02:01:54	80.652
07/23/02	02:02:54	80.510
07/23/02	02:03:54	80.197
07/23/02	02:04:54	80.965
07/23/02	02:05:54	81.818
07/23/02	02:06:54	80.226
07/23/02	02:07:54	80.766
07/23/02	02:08:54	79.458
07/23/02	02:09:54	81.022
07/23/02	02:10:54	79.600
07/23/02	02:11:54	82.017
07/23/02	02:12:54	80.027
07/23/02	02:13:54	79.458
07/23/02	02:14:54	81.363
07/23/02	02:15:54	79.856
07/23/02	02:16:54	80.652
07/23/02	02:17:54	80.197
07/23/02	02:18:54	78.861
07/23/02	02:19:54	80.169
07/23/02	02:20:54	81.648
07/23/02	02:21:54	81.022
07/23/02	02:22:54	80.396
07/23/02	02:23:54	80.908
07/23/02	02:24:54	82.046
07/23/02	02:25:54	80.254
07/23/02	02:26:54	80.055
07/23/02	02:27:54	80.140
07/23/02	02:28:54	80.254
07/23/02	02:29:54	81.335
07/23/02	02:30:54	80.169
07/23/02	02:31:54	80.368
07/23/02	02:32:54	79.486
07/23/02	02:33:54	80.084
07/23/02	02:34:54	81.250
07/23/02	02:35:54	78.974
07/23/02	02:36:54	80.140
07/23/02	02:37:54	78.349
07/23/02	02:38:54	81.818
07/23/02	02:39:54	78.832
07/23/02	02:40:54	79.259
07/23/02	02:41:54	79.856
07/23/02	02:42:54	80.482
07/23/02	02:43:54	80.140
07/23/02	02:44:54	79.998
07/23/02	02:45:54	79.629
07/23/02	02:46:54	79.429
07/23/02	02:47:54	80.027

AQUARENA SPRINGS AND UHLAND - NO. 6792 cont.

Date Time	Pres (PSI)	Date Time	Pres (PSI)	Date Time	Pres (PSI)	Date Time	Pres (PSI
07/23/02 02:48:54	79.458	07/23/02 03:54:54	81.079	07/23/02 05:00:54	75.420	07/23/02 06:06:54	73.742
07/23/02 02:49:54	81.961	07/23/02 03:55:54	81.335	07/23/02 05:01:54	73.230	07/23/02 06:07:54	72.490
07/23/02 02:50:54	80.140	07/23/02 03:56:54	81.250	07/23/02 05:02:54	76.984	07/23/02 06:08:54	73.230
07/23/02 02:51:54	79.202	07/23/02 03:57:54	80.140	07/23/02 05:03:54	74.652	07/23/02 06:09:54	77.353
07/23/02 02:52:54	80.994	07/23/02 03:58:54	79.941	07/23/02 05:04:54	76.955	07/23/02 06:10:54	72.803
07/23/02 02:53:54	80.283	07/23/02 03:59:54	77.211	07/23/02 05:05:54	77.183	07/23/02 06:11:54	73.514
07/23/02 02:54:54	79.685	07/23/02 04:00:54	80.795	07/23/02 05:06:54	75.846	07/23/02 06:12:54	72.718
07/23/02 02:55:54	80.652	07/23/02 04:01:54	82.558	07/23/02 05:07:54	76.728	07/23/02 06:13:54	74.595
07/23/02 02:56:54	79.856	07/23/02 04:02:54	79.771	07/23/02 05:08:54	73.258	07/23/02 06:14:54	72.291
07/23/02 02:57:54	80.994	07/23/02 04:03:54	80.766	07/23/02 05:09:54	72.661	07/23/02 06:15:54	73.429
07/23/02 02:58:54	80.681	07/23/02 04:04:54	81.107	07/23/02 05:10:54	73.002	07/23/02 06:16:54	73.628
07/23/02 02:59:54	80.283	07/23/02 04:05:54	80.851	07/23/02 05:11:54	74.083	07/23/02 06:17:54	74.481
07/23/02 03:00:54	79.344	07/23/02 04:06:54	80.311	07/23/02 05:12:54	72.576	07/23/02 06:18:54	73.457
07/23/02 03:01:54	80.738	07/23/02 04:07:54	79.515	07/23/02 05:13:54	72.291	07/23/02 06:19:54	72.889
07/23/02 03:02:54	78.320	07/23/02 04:08:54	81.022	07/23/02 05:14:54	72.035	07/23/02 06:20:54	71.723
07/23/02 03:03:54	80.539	07/23/02 04:09:54	80.851	07/23/02 05:15:54	73.656	07/23/02 06:21:54	73.600
07/23/02 03:04:54	80.226	07/23/02 04:10:54	81.932	07/23/02 05:16:54	72.718	07/23/02 06:22:54	71.751
07/23/02 03:05:54	79.515	07/23/02 04:11:54	80.311	07/23/02 05:17:54	73.827	07/23/02 06:23:54	73.400
07/23/02 03:06:54	81.449	07/23/02 04:12:54	80.595	07/23/02 05:18:54	71.495	07/23/02 06:24:54	73.685
07/23/02 03:07:54	79.714	07/23/02 04:13:54	78.093	07/23/02 05:19:54	73.827	07/23/02 06:25:54	58.214
07/23/02 03:08:54	81.250	07/23/02 04:14:54	80.766	07/23/02 05:20:54	73.884	07/23/02 06:26:54	61.826
07/23/02 03:09:54	81.136	07/23/02 04:15:54	79.031	07/23/02 05:21:54	73.400	07/23/02 06:27:54	67.400
07/23/02 03:10:54	81.193	07/23/02 04:16:54	80.595	07/23/02 05:22:54	72.803	07/23/02 06:28:54	69.874
07/23/02 03:11:54	80.027	07/23/02 04:17:54	80.140	07/23/02 05:23:54	72.945	07/23/02 06:29:54	71.609
07/23/02 03:12:54	81.306	07/23/02 04:18:54	78.349	07/23/02 05:24:54	75.761	07/23/02 06:30:54	72.092
07/23/02 03:13:54	78.463	07/23/02 04:19:54	79.941	07/23/02 05:25:54	73.258	07/23/02 06:31:54	68.879
07/23/02 03:14:54	80.652	07/23/02 04:20:54	79.572	07/23/02 05:26:54	73.912	07/23/02 06:32:54	69.504
07/23/02 03:15:54	80.226	07/23/02 04:21:54	80.283	07/23/02 05:27:54	71.893	07/23/02 06:33:54	69.476
07/23/02 03:16:54	80.226	07/23/02 04:22:54	78.178	07/23/02 05:28:54	71.808	07/23/02 06:34:54	69.959
07/23/02 03:17:54	80.197	07/23/02 04:23:54	79.742	07/23/02 05:29:54	73.941	07/23/02 06:35:54	69.334
07/23/02 03:18:54	80.681	07/23/02 04:24:54	79.913	07/23/02 05:30:54	71.495	07/23/02 06:36:54	71.296
07/23/02 03:19:54	80.311	07/23/02 04:25:54	80.937	07/23/02 05:31:54	73.287	07/23/02 06:37:54	70.898
07/23/02 03:20:54	79.714	07/23/02 04:26:54	77.837	07/23/02 05:32:54	70.983	07/23/02 06:38:54	71.666
07/23/02 03:21:54	82.017	07/23/02 04:27:54	80.055	07/23/02 05:33:54	68.623	07/23/02 06:39:54	72.377
07/23/02 03:22:54	80.283	07/23/02 04:28:54	81.022	07/23/02 05:34:54	71.438	07/23/02 06:40:54	70.983
07/23/02 03:23:54	80.197	07/23/02 04:29:54	80.226	07/23/02 05:35:54	73.258	07/23/02 06:41:54	69.220
07/23/02 03:24:54	78.775	07/23/02 04:30:54	79.913	07/23/02 05:36:54	70.869	07/23/02 06:42:54	69.703
07/23/02 03:25:54	79.259	07/23/02 04:31:54	80.880	07/23/02 05:37:54	70.670	07/23/02 06:43:54	69.106
07/23/02 03:26:54	80.595	07/23/02 04:32:54	80.510	07/23/02 05:38:54	72.149	07/23/02 06:44:54	69.959
07/23/02 03:27:54	80.709	07/23/02 04:33:54	79.060	07/23/02 05:39:54	69.305	07/23/02 06:45:54	69.931
07/23/02 03:28:54	80.937	07/23/02 04:34:54	78.861	07/23/02 05:40:54	68.338	07/23/02 06:46:54	71.580
07/23/02 03:29:54	81.904	07/23/02 04:35:54	80.539	07/23/02 05:41:54	70.244	07/23/02 06:47:54	67.002
07/23/02 03:30:54	80.738	07/23/02 04:36:54	80.055	07/23/02 05:42:54	68.765	07/23/02 06:48:54	70.926
07/23/02 03:31:54	80.880	07/23/02 04:37:54	80.396	07/23/02 05:43:54	67.798	07/23/02 06:49:54	67.570
07/23/02 03:32:54	80.226	07/23/02 04:38:54	80.368	07/23/02 05:44:54	69.391	07/23/02 06:50:54	68.793
07/23/02 03:33:54	82.245	07/23/02 04:39:54	80.254	07/23/02 05:45:54	69.988	07/23/02 06:51:54	68.992
07/23/02 03:34:54	81.164	07/23/02 04:40:54	80.169	07/23/02 05:46:54	70.130	07/23/02 06:52:54	70.557
07/23/02 03:35:54	80.624	07/23/02 04:41:54	79.458	07/23/02 05:47:54	68.651	07/23/02 06:53:54	68.281
07/23/02 03:36:54	81.392	07/23/02 04:42:54	79.941	07/23/02 05:48:54	68.310	07/23/02 06:54:54	69.732
07/23/02 03:37:54	79.515	07/23/02 04:43:54	79.799	07/23/02 05:49:54	66.433	07/23/02 06:55:54	69.305
07/23/02 03:38:54	80.283	07/23/02 04:44:54	76.358	07/23/02 05:50:54	83.070	07/23/02 06:56:54	70.813
07/23/02 03:39:54	80.795	07/23/02 04:45:54	77.581	07/23/02 05:51:54	78.775	07/23/02 06:57:54	70.016
07/23/02 03:40:54	79.799	07/23/02 04:46:54	80.880	07/23/02 05:52:54	76.187	07/23/02 06:58:54	72.206
07/23/02 03:41:54	81.648	07/23/02 04:47:54	78.377	07/23/02 05:53:54	76.870	07/23/02 06:59:54	69.931
07/23/02 03:42:54	79.145	07/23/02 04:48:54	78.605	07/23/02 05:54:54	76.955	07/23/02 07:00:54	68.822
07/23/02 03:43:54	80.994	07/23/02 04:49:54	79.685	07/23/02 05:55:54	77.695	07/23/02 07:01:54	71.068
07/23/02 03:44:54	79.515	07/23/02 04:50:54	79.941	07/23/02 05:56:54	77.496	07/23/02 07:02:54	69.419
07/23/02 03:45:54	81.335	07/23/02 04:51:54	80.084	07/23/02 05:57:54	75.476	07/23/02 07:03:54	71.865
07/23/02 03:46:54	78.207	07/23/02 04:52:54	79.828	07/23/02 05:58:54	75.818	07/23/02 07:04:54	69.533
07/23/02 03:47:54	79.344	07/23/02 04:53:54	78.178	07/23/02 05:59:54	76.984	07/23/02 07:05:54	66.973
07/23/02 03:48:54	81.420	07/23/02 04:54:54	80.368	07/23/02 06:00:54	76.529	07/23/02 07:06:54	69.021
07/23/02 03:49:54	79.600	07/23/02 04:55:54	78.747	07/23/02 06:01:54	76.671	07/23/02 07:07:54	67.115
07/23/02 03:50:54	80.624	07/23/02 04:56:54	79.316	07/23/02 06:02:54	75.647	07/23/02 07:08:54	70.926
07/23/02 03:51:54	81.449	07/23/02 04:57:54	79.771	07/23/02 06:03:54	75.562	07/23/02 07:09:54	68.537
07/23/02 03:52:54	80.140	07/23/02 04:58:54	79.970	07/23/02 06:04:54	76.443	07/23/02 07:10:54	68.964
07/23/02 03:53:54	80.709	07/23/02 04:59:54	63.817	07/23/02 06:05:54	74.822	07/23/02 07:11:54	69.675

AQUARENA SPRINGS AND UHLAND - NO. 6792 cont.

Date	Time	Pres (PSI)
07/23/02	07:12:54	68.537
07/23/02	07:13:54	68.509
07/23/02	07:14:54	66.461
07/23/02	07:15:54	67.940
07/23/02	07:16:54	66.120
07/23/02	07:17:54	65.039
07/23/02	07:18:54	66.006
07/23/02	07:19:54	64.442
07/23/02	07:20:54	65.978
07/23/02	07:21:54	67.286
07/23/02	07:22:54	66.746
07/23/02	07:23:54	67.400
07/23/02	07:24:54	64.897
07/23/02	07:25:54	68.594
07/23/02	07:26:54	67.428
07/23/02	07:27:54	68.879
07/23/02	07:28:54	68.765
07/23/02	07:29:54	70.272
07/23/02	07:30:54	68.082
07/23/02	07:31:54	66.461
07/23/02	07:32:54	66.774
07/23/02	07:33:54	68.452
07/23/02	07:34:54	69.163
07/23/02	07:35:54	67.798
07/23/02	07:36:54	68.992
07/23/02	07:37:54	68.054
07/23/02	07:38:54	68.139
07/23/02	07:39:54	64.641
07/23/02	07:40:54	73.912
07/23/02	07:41:54	70.813
07/23/02	07:42:54	69.049
07/23/02	07:43:54	69.078
07/23/02	07:44:54	69.447
07/23/02	07:45:54	69.106
07/23/02	07:46:54	67.343
07/23/02	07:47:54	70.955
07/23/02	07:48:54	71.580
07/23/02	07:49:54	69.732
07/23/02	07:50:54	65.494
07/23/02	07:51:54	68.452
07/23/02	07:52:54	72.889
07/23/02	07:53:54	70.585
07/23/02	07:54:54	67.826
07/23/02	07:55:54	70.329
07/23/02	07:56:54	69.476
07/23/02	07:57:54	70.016
07/23/02	07:58:54	68.736
07/23/02	07:59:54	71.495
07/23/02	08:00:54	73.372
07/23/02	08:01:54	71.296
07/23/02	08:02:54	73.656
07/23/02	08:03:54	70.699
07/23/02	08:04:54	72.746
07/23/02	08:05:54	74.055
07/23/02	08:06:54	71.580
07/23/02	08:07:54	68.736
07/23/02	08:08:54	68.793
07/23/02	08:09:54	66.916
07/23/02	08:10:54	69.988
07/23/02	08:11:54	73.941
07/23/02	08:12:54	73.855
07/23/02	08:13:54	73.059
07/23/02	08:14:54	74.652
07/23/02	08:15:54	72.803
07/23/02	08:16:54	71.751
07/23/02	08:17:54	72.206
07/23/02	08:18:54	71.495
07/23/02	08:19:54	73.713
07/23/02	08:20:54	73.941
07/23/02	08:21:54	76.301
07/23/02	08:22:54	71.353
07/23/02	08:23:54	71.068
07/23/02	08:24:54	70.329
07/23/02	08:25:54	72.974
07/23/02	08:26:54	73.998
07/23/02	08:27:54	71.580
07/23/02	08:28:54	69.277
07/23/02	08:29:54	70.357
07/23/02	08:30:54	71.211
07/23/02	08:31:54	71.580
07/23/02	08:32:54	71.211
07/23/02	08:33:54	71.723
07/23/02	08:34:54	69.504
07/23/02	08:35:54	69.760
07/23/02	08:36:54	70.983
07/23/02	08:37:54	68.566
07/23/02	08:38:54	72.547
07/23/02	08:39:54	71.666
07/23/02	08:40:54	71.040
07/23/02	08:41:54	69.618
07/23/02	08:42:54	72.035
07/23/02	08:43:54	73.059
07/23/02	08:44:54	54.858
07/23/02	08:45:54	56.252
07/23/02	08:46:54	55.456
07/23/02	08:47:54	52.868
07/23/02	08:48:54	54.091
07/23/02	08:49:54	63.504
07/23/02	08:50:54	66.205
07/23/02	08:51:54	70.869
07/23/02	08:52:54	65.893
07/23/02	08:53:54	67.912
07/23/02	08:54:54	68.395
07/23/02	08:55:54	69.817
07/23/02	08:56:54	69.192
07/23/02	08:57:54	68.765
07/23/02	08:58:54	64.272
07/23/02	08:59:54	59.835
07/23/02	09:00:54	57.987
07/23/02	09:01:54	57.247
07/23/02	09:02:54	56.565
07/23/02	09:03:54	57.105
07/23/02	09:04:54	58.925
07/23/02	09:05:54	55.512
07/23/02	09:06:54	57.162
07/23/02	09:07:54	53.778
07/23/02	09:08:54	56.337
07/23/02	09:09:54	52.014
07/23/02	09:10:54	54.773
07/23/02	09:11:54	53.977
07/23/02	09:12:54	55.257
07/23/02	09:13:54	56.423
07/23/02	09:14:54	55.541
07/23/02	09:15:54	54.546
07/23/02	09:16:54	57.901
07/23/02	09:17:54	51.275
07/23/02	09:18:54	55.285
07/23/02	09:19:54	57.020
07/23/02	09:20:54	54.858
07/23/02	09:21:54	55.086
07/23/02	09:22:54	55.484
07/23/02	09:23:54	58.356
07/23/02	09:24:54	59.465
07/23/02	09:25:54	62.764
07/23/02	09:26:54	68.537
07/23/02	09:27:54	69.220
07/23/02	09:28:54	70.187
07/23/02	09:29:54	68.623
07/23/02	09:30:54	66.774
07/23/02	09:31:54	68.623
07/23/02	09:32:54	69.760
07/23/02	09:33:54	69.504
07/23/02	09:34:54	69.391
07/23/02	09:35:54	68.936
07/23/02	09:36:54	69.732
07/23/02	09:37:54	70.215
07/23/02	09:38:54	70.926
07/23/02	09:39:54	66.689
07/23/02	09:40:54	69.817
07/23/02	09:41:54	68.708
07/23/02	09:42:54	67.172
07/23/02	09:43:54	70.585
07/23/02	09:44:54	69.106
07/23/02	09:45:54	69.419
07/23/02	09:46:54	70.613
07/23/02	09:47:54	70.699
07/23/02	09:48:54	71.495
07/23/02	09:49:54	72.604
07/23/02	09:50:54	71.666
07/23/02	09:51:54	72.092
07/23/02	09:52:54	71.068
07/23/02	09:53:54	71.495
07/23/02	09:54:54	74.339
07/23/02	09:55:54	69.618
07/23/02	09:56:54	65.324
07/23/02	09:57:54	67.201
07/23/02	09:58:54	66.973
07/23/02	09:59:54	69.959
07/23/02	10:00:54	68.139
07/23/02	10:01:54	69.277
07/23/02	10:02:54	68.566
07/23/02	10:03:54	70.130
07/23/02	10:04:54	69.476
07/23/02	10:05:54	67.343
07/23/02	10:06:54	68.537
07/23/02	10:07:54	65.068
07/23/02	10:08:54	63.561
07/23/02	10:09:54	68.168
07/23/02	10:10:54	69.334
07/23/02	10:11:54	68.111
07/23/02	10:12:54	67.997
07/23/02	10:13:54	67.087
07/23/02	10:14:54	65.750
07/23/02	10:15:54	68.992
07/23/02	10:16:54	65.893
07/23/02	10:17:54	67.115
07/23/02	10:18:54	69.988
07/23/02	10:19:54	69.447
07/23/02	10:20:54	70.158
07/23/02	10:21:54	72.775
07/23/02	10:22:54	73.173
07/23/02	10:23:54	72.434
07/23/02	10:24:54	73.258
07/23/02	10:25:54	70.613
07/23/02	10:26:54	69.447
07/23/02	10:27:54	72.291
07/23/02	10:28:54	72.689
07/23/02	10:29:54	70.557
07/23/02	10:30:54	67.684
07/23/02	10:31:54	71.324
07/23/02	10:32:54	70.244
07/23/02	10:33:54	69.476
07/23/02	10:34:54	70.670
07/23/02	10:35:54	67.656
07/23/02	10:36:54	69.988
07/23/02	10:37:54	70.016
07/23/02	10:38:54	73.059
07/23/02	10:39:54	71.211
07/23/02	10:40:54	70.784
07/23/02	10:41:54	69.931
07/23/02	10:42:54	72.320
07/23/02	10:43:54	70.443
07/23/02	10:44:54	70.699
07/23/02	10:45:54	68.822
07/23/02	10:46:54	67.599
07/23/02	10:47:54	69.192
07/23/02	10:48:54	69.789
07/23/02	10:49:54	66.149
07/23/02	10:50:54	66.433
07/23/02	10:51:54	68.225
07/23/02	10:52:54	70.443
07/23/02	10:53:54	71.666
07/23/02	10:54:54	66.660
07/23/02	10:55:54	68.509
07/23/02	10:56:54	66.916
07/23/02	10:57:54	68.111
07/23/02	10:58:54	69.874
07/23/02	10:59:54	67.997
07/23/02	11:00:54	62.992
07/23/02	11:01:54	63.390
07/23/02	11:02:54	66.433
07/23/02	11:03:54	70.670
07/23/02	11:04:54	69.334
07/23/02	11:05:54	41.151
07/23/02	11:06:54	59.522
07/23/02	11:07:54	66.376
07/23/02	11:08:54	66.916
07/23/02	11:09:54	67.371
07/23/02	11:10:54	64.158
07/23/02	11:11:54	63.020
07/23/02	11:12:54	65.267
07/23/02	11:13:54	66.234
07/23/02	11:14:54	65.665
07/23/02	11:15:54	65.352
07/23/02	11:16:54	65.267
07/23/02	11:17:54	63.703
07/23/02	11:18:54	66.916
07/23/02	11:19:54	64.897
07/23/02	11:20:54	63.504
07/23/02	11:21:54	63.845
07/23/02	11:22:54	63.162
07/23/02	11:23:54	63.959
07/23/02	11:24:54	69.817
07/23/02	11:25:54	63.959
07/23/02	11:26:54	67.172
07/23/02	11:27:54	64.528
07/23/02	11:28:54	64.044
07/23/02	11:29:54	68.594
07/23/02	11:30:54	67.599
07/23/02	11:31:54	66.490
07/23/02	11:32:54	68.936
07/23/02	11:33:54	70.016
07/23/02	11:34:54	65.807
07/23/02	11:35:54	67.997

AQUARENA SPRINGS AND UHLAND - NO. 6792 cont.

Date	Time	Pres (PSI)
07/23/02	11:36:54	67.002
07/23/02	11:37:54	69.647
07/23/02	11:38:54	67.798
07/23/02	11:39:54	68.708
07/23/02	11:40:54	67.883
07/23/02	11:41:54	71.723
07/23/02	11:42:54	64.869
07/23/02	11:43:54	64.414
07/23/02	11:44:54	68.338
07/23/02	11:45:54	68.225
07/23/02	11:46:54	68.139
07/23/02	11:47:54	68.082
07/23/02	11:48:54	69.049
07/23/02	11:49:54	67.940
07/23/02	11:50:54	70.329
07/23/02	11:51:54	69.732
07/23/02	11:52:54	69.476
07/23/02	11:53:54	68.054
07/23/02	11:54:54	66.689
07/23/02	11:55:54	68.509
07/23/02	11:56:54	66.405
07/23/02	11:57:54	69.391
07/23/02	11:58:54	68.253
07/23/02	11:59:54	66.746
07/23/02	12:00:54	70.557
07/23/02	12:01:54	68.452
07/23/02	12:02:54	69.419
07/23/02	12:03:54	65.551
07/23/02	12:04:54	69.163
07/23/02	12:05:54	66.234
07/23/02	12:06:54	67.400
07/23/02	12:07:54	66.433
07/23/02	12:08:54	68.139
07/23/02	12:09:54	68.964
07/23/02	12:10:54	68.054
07/23/02	12:11:54	66.632
07/23/02	12:12:54	66.149
07/23/02	12:13:54	67.940
07/23/02	12:14:54	66.717
07/23/02	12:15:54	67.229
07/23/02	12:16:54	68.992
07/23/02	12:17:54	68.765
07/23/02	12:18:54	63.333
07/23/02	12:19:54	67.514
07/23/02	12:20:54	66.291
07/23/02	12:21:54	67.144
07/23/02	12:22:54	67.514
07/23/02	12:23:54	68.168
07/23/02	12:24:54	67.656
07/23/02	12:25:54	67.286
07/23/02	12:26:54	67.115
07/23/02	12:27:54	67.855
07/23/02	12:28:54	68.054
07/23/02	12:29:54	68.082
07/23/02	12:30:54	69.192
07/23/02	12:31:54	66.916
07/23/02	12:32:54	69.931
07/23/02	12:33:54	68.310
07/23/02	12:34:54	66.405
07/23/02	12:35:54	71.381
07/23/02	12:36:54	67.940
07/23/02	12:37:54	66.518
07/23/02	12:38:54	67.542
07/23/02	12:39:54	67.144
07/23/02	12:40:54	68.367
07/23/02	12:41:54	58.584
07/23/02	12:42:54	72.206
07/23/02	12:43:54	71.893
07/23/02	12:44:54	72.889
07/23/02	12:45:54	72.149
07/23/02	12:46:54	71.268
07/23/02	12:47:54	69.021
07/23/02	12:48:54	68.566
07/23/02	12:49:54	70.699
07/23/02	12:50:54	70.699
07/23/02	12:51:54	70.500
07/23/02	12:52:54	72.035
07/23/02	12:53:54	72.320
07/23/02	12:54:54	67.656
07/23/02	12:55:54	68.736
07/23/02	12:56:54	65.893
07/23/02	12:57:54	66.547
07/23/02	12:58:54	65.068
07/23/02	12:59:54	69.902
07/23/02	13:00:54	66.234
07/23/02	13:01:54	68.338
07/23/02	13:02:54	69.703
07/23/02	13:03:54	70.016
07/23/02	13:04:54	67.087
07/23/02	13:05:54	65.580
07/23/02	13:06:54	59.949
07/23/02	13:07:54	57.873
07/23/02	13:08:54	67.542
07/23/02	13:09:54	66.916
07/23/02	13:10:54	48.943
07/23/02	13:11:54	48.317
07/23/02	13:12:54	44.478
07/23/02	13:13:54	45.673
07/23/02	13:14:54	44.165
07/23/02	13:15:54	43.398
07/23/02	13:16:54	41.179
07/23/02	13:17:54	41.748
07/23/02	13:18:54	38.478
07/23/02	13:19:54	38.933
07/23/02	13:20:54	45.900
07/23/02	13:21:54	48.972
07/23/02	13:22:54	62.935
07/23/02	13:23:54	67.798
07/23/02	13:24:54	65.893
07/23/02	13:25:54	67.940
07/23/02	13:26:54	70.670
07/23/02	13:27:54	68.850
07/23/02	13:28:54	67.883
07/23/02	13:29:54	70.926
07/23/02	13:30:54	69.504
07/23/02	13:31:54	68.765
07/23/02	13:32:54	67.229
07/23/02	13:33:54	68.992
07/23/02	13:34:54	68.054
07/23/02	13:35:54	68.964
07/23/02	13:36:54	67.371
07/23/02	13:37:54	67.798
07/23/02	13:38:54	64.954
07/23/02	13:39:54	68.054
07/23/02	13:40:54	67.315
07/23/02	13:41:54	67.627
07/23/02	13:42:54	66.717
07/23/02	13:43:54	68.537
07/23/02	13:44:54	75.050
07/23/02	13:45:54	71.723
07/23/02	13:46:54	70.329
07/23/02	13:47:54	71.381
07/23/02	13:48:54	68.395
07/23/02	13:49:54	65.267
07/23/02	13:50:54	68.537
07/23/02	13:51:54	67.201
07/23/02	13:52:54	68.111
07/23/02	13:53:54	69.220
07/23/02	13:54:54	69.760
07/23/02	13:55:54	61.342
07/23/02	13:56:54	61.115
07/23/02	13:57:54	58.897
07/23/02	13:58:54	59.693
07/23/02	13:59:54	62.707
07/23/02	14:00:54	58.982
07/23/02	14:01:54	57.532
07/23/02	14:02:54	59.067
07/23/02	14:03:54	68.992
07/23/02	14:04:54	70.585
07/23/02	14:05:54	69.305
07/23/02	14:06:54	67.855
07/23/02	14:07:54	65.011
07/23/02	14:08:54	67.514
07/23/02	14:09:54	68.026
07/23/02	14:10:54	70.443
07/23/02	14:11:54	68.566
07/23/02	14:12:54	70.585
07/23/02	14:13:54	70.869
07/23/02	14:14:54	71.438
07/23/02	14:15:54	68.964
07/23/02	14:16:54	67.428
07/23/02	14:17:54	69.874
07/23/02	14:18:54	70.926
07/23/02	14:19:54	66.888
07/23/02	14:20:54	71.580
07/23/02	14:21:54	69.902
07/23/02	14:22:54	66.945
07/23/02	14:23:54	70.813
07/23/02	14:24:54	68.168
07/23/02	14:25:54	69.760
07/23/02	14:26:54	71.068
07/23/02	14:27:54	70.045
07/23/02	14:28:54	69.476
07/23/02	14:29:54	68.594
07/23/02	14:30:54	69.305
07/23/02	14:31:54	69.675
07/23/02	14:32:54	68.765
07/23/02	14:33:54	70.813
07/23/02	14:34:54	69.618
07/23/02	14:35:54	68.253
07/23/02	14:36:54	69.561
07/23/02	14:37:54	69.248
07/23/02	14:38:54	69.959
07/23/02	14:39:54	66.518
07/23/02	14:40:54	70.329
07/23/02	14:41:54	72.803
07/23/02	14:42:54	72.661
07/23/02	14:43:54	71.381
07/23/02	14:44:54	71.211
07/23/02	14:45:54	44.194
07/23/02	14:46:54	48.062
07/23/02	14:47:54	55.171
07/23/02	14:48:54	67.570
07/23/02	14:49:54	66.774
07/23/02	14:50:54	65.267
07/23/02	14:51:54	67.400
07/23/02	14:52:54	68.054
07/23/02	14:53:54	69.618
07/23/02	14:54:54	64.641
07/23/02	14:55:54	67.713
07/23/02	14:56:54	68.281
07/23/02	14:57:54	67.087
07/23/02	14:58:54	69.504
07/23/02	14:59:54	70.471
07/23/02	15:00:54	68.481
07/23/02	15:01:54	68.168
07/23/02	15:02:54	70.983
07/23/02	15:03:54	71.296
07/23/02	15:04:54	69.760
07/23/02	15:05:54	68.082
07/23/02	15:06:54	69.021
07/23/02	15:07:54	68.395
07/23/02	15:08:54	71.666
07/23/02	15:09:54	67.457
07/23/02	15:10:54	66.945
07/23/02	15:11:54	67.115
07/23/02	15:12:54	68.879
07/23/02	15:13:54	70.016
07/23/02	15:14:54	67.570
07/23/02	15:15:54	69.902
07/23/02	15:16:54	69.078
07/23/02	15:17:54	69.419
07/23/02	15:18:54	70.613
07/23/02	15:19:54	79.685
07/23/02	15:20:54	76.244
07/23/02	15:21:54	72.434
07/23/02	15:22:54	72.576
07/23/02	15:23:54	73.201
07/23/02	15:24:54	72.718
07/23/02	15:25:54	73.770
07/23/02	15:26:54	71.438
07/23/02	15:27:54	73.088
07/23/02	15:28:54	73.372
07/23/02	15:29:54	73.258
07/23/02	15:30:54	72.320
07/23/02	15:31:54	73.287
07/23/02	15:32:54	73.002
07/23/02	15:33:54	74.424
07/23/02	15:34:54	72.291
07/23/02	15:35:54	71.836
07/23/02	15:36:54	61.399
07/23/02	15:37:54	70.500
07/23/02	15:38:54	72.348
07/23/02	15:39:54	71.324
07/23/02	15:40:54	72.291
07/23/02	15:41:54	70.158
07/23/02	15:42:54	70.414
07/23/02	15:43:54	72.206
07/23/02	15:44:54	75.334
07/23/02	15:45:54	74.225
07/23/02	15:46:54	74.140
07/23/02	15:47:54	72.434
07/23/02	15:48:54	73.514
07/23/02	15:49:54	72.576
07/23/02	15:50:54	74.055
07/23/02	15:51:54	74.254
07/23/02	15:52:54	72.462
07/23/02	15:53:54	70.272
07/23/02	15:54:54	72.035
07/23/02	15:55:54	70.471
07/23/02	15:56:54	73.372
07/23/02	15:57:54	71.125
07/23/02	15:58:54	70.130
07/23/02	15:59:54	70.187

AQUARENA SPRINGS AND UHLAND - NO. 6792 cont.

Date	Time	Pres (PSI)
07/23/02	16:00:54	72.462
07/23/02	16:01:54	69.504
07/23/02	16:02:54	71.495
07/23/02	16:03:54	72.490
07/23/02	16:04:54	70.215
07/23/02	16:05:54	68.736
07/23/02	16:06:54	71.211
07/23/02	16:07:54	72.149
07/23/02	16:08:54	69.447
07/23/02	16:09:54	72.263
07/23/02	16:10:54	70.784
07/23/02	16:11:54	70.926
07/23/02	16:12:54	72.064
07/23/02	16:13:54	69.533
07/23/02	16:14:54	72.462
07/23/02	16:15:54	72.434
07/23/02	16:16:54	68.395
07/23/02	16:17:54	70.215
07/23/02	16:18:54	70.272
07/23/02	16:19:54	72.348
07/23/02	16:20:54	70.613
07/23/02	16:21:54	71.808
07/23/02	16:22:54	72.234
07/23/02	16:23:54	71.381
07/23/02	16:24:54	60.120
07/23/02	16:25:54	75.249
07/23/02	16:26:54	72.746
07/23/02	16:27:54	70.670
07/23/02	16:28:54	72.007
07/23/02	16:29:54	69.760
07/23/02	16:30:54	73.827
07/23/02	16:31:54	75.931
07/23/02	16:32:54	71.580
07/23/02	16:33:54	71.865
07/23/02	16:34:54	73.031
07/23/02	16:35:54	71.040
07/23/02	16:36:54	74.680
07/23/02	16:37:54	73.486
07/23/02	16:38:54	73.628
07/23/02	16:39:54	72.434
07/23/02	16:40:54	69.561
07/23/02	16:41:54	72.746
07/23/02	16:42:54	55.456
07/23/02	16:43:54	51.417
07/23/02	16:44:54	55.086
07/23/02	16:45:54	54.091
07/23/02	16:46:54	54.546
07/23/02	16:47:54	60.404
07/23/02	16:48:54	71.182
07/23/02	16:49:54	71.609
07/23/02	16:50:54	69.248
07/23/02	16:51:54	66.831
07/23/02	16:52:54	70.784
07/23/02	16:53:54	69.476
07/23/02	16:54:54	69.533
07/23/02	16:55:54	66.604
07/23/02	16:56:54	67.542
07/23/02	16:57:54	68.850
07/23/02	16:58:54	68.395
07/23/02	16:59:54	64.727
07/23/02	17:00:54	69.305
07/23/02	17:01:54	66.518
07/23/02	17:02:54	68.879
07/23/02	17:03:54	64.584
07/23/02	17:04:54	69.647
07/23/02	17:05:54	70.613
07/23/02	17:06:54	66.860
07/23/02	17:07:54	67.912
07/23/02	17:08:54	65.580
07/23/02	17:09:54	74.083
07/23/02	17:10:54	74.709
07/23/02	17:11:54	70.272
07/23/02	17:12:54	69.078
07/23/02	17:13:54	71.097
07/23/02	17:14:54	68.395
07/23/02	17:15:54	70.869
07/23/02	17:16:54	67.940
07/23/02	17:17:54	71.723
07/23/02	17:18:54	70.926
07/23/02	17:19:54	69.789
07/23/02	17:20:54	70.016
07/23/02	17:21:54	70.187
07/23/02	17:22:54	67.201
07/23/02	17:23:54	69.305
07/23/02	17:24:54	73.827
07/23/02	17:25:54	72.718
07/23/02	17:26:54	70.813
07/23/02	17:27:54	67.713
07/23/02	17:28:54	70.102
07/23/02	17:29:54	66.831
07/23/02	17:30:54	67.798
07/23/02	17:31:54	70.244
07/23/02	17:32:54	68.850
07/23/02	17:33:54	67.286
07/23/02	17:34:54	71.154
07/23/02	17:35:54	70.841
07/23/02	17:36:54	71.723
07/23/02	17:37:54	70.329
07/23/02	17:38:54	71.922
07/23/02	17:39:54	71.922
07/23/02	17:40:54	71.182
07/23/02	17:41:54	69.647
07/23/02	17:42:54	70.386
07/23/02	17:43:54	71.410
07/23/02	17:44:54	72.064
07/23/02	17:45:54	72.206
07/23/02	17:46:54	71.580
07/23/02	17:47:54	74.083
07/23/02	17:48:54	69.248
07/23/02	17:49:54	72.149
07/23/02	17:50:54	74.424
07/23/02	17:51:54	74.225
07/23/02	17:52:54	69.931
07/23/02	17:53:54	69.618
07/23/02	17:54:54	67.087
07/23/02	17:55:54	70.386
07/23/02	17:56:54	69.789
07/23/02	17:57:54	69.334
07/23/02	17:58:54	70.016
07/23/02	17:59:54	71.381
07/23/02	18:00:54	67.855
07/23/02	18:01:54	72.689
07/23/02	18:02:54	71.268
07/23/02	18:03:54	69.021
07/23/02	18:04:54	71.381
07/23/02	18:05:54	73.002
07/23/02	18:06:54	70.727
07/23/02	18:07:54	69.305
07/23/02	18:08:54	69.959
07/23/02	18:09:54	71.353
07/23/02	18:10:54	70.102
07/23/02	18:11:54	71.580
07/23/02	18:12:54	69.106
07/23/02	18:13:54	71.922
07/23/02	18:14:54	72.576
07/23/02	18:15:54	69.419
07/23/02	18:16:54	71.410
07/23/02	18:17:54	70.613
07/23/02	18:18:54	69.931
07/23/02	18:19:54	70.813
07/23/02	18:20:54	69.419
07/23/02	18:21:54	70.443
07/23/02	18:22:54	67.457
07/23/02	18:23:54	70.585
07/23/02	18:24:54	70.983
07/23/02	18:25:54	71.666
07/23/02	18:26:54	72.064
07/23/02	18:27:54	71.040
07/23/02	18:28:54	69.874
07/23/02	18:29:54	69.817
07/23/02	18:30:54	68.964
07/23/02	18:31:54	70.898
07/23/02	18:32:54	70.102
07/23/02	18:33:54	72.604
07/23/02	18:34:54	67.428
07/23/02	18:35:54	67.570
07/23/02	18:36:54	69.561
07/23/02	18:37:54	70.500
07/23/02	18:38:54	72.490
07/23/02	18:39:54	72.519
07/23/02	18:40:54	71.381
07/23/02	18:41:54	69.675
07/23/02	18:42:54	72.064
07/23/02	18:43:54	72.462
07/23/02	18:44:54	66.433
07/23/02	18:45:54	72.149
07/23/02	18:46:54	70.500
07/23/02	18:47:54	68.736
07/23/02	18:48:54	70.841
07/23/02	18:49:54	70.045
07/23/02	18:50:54	70.983
07/23/02	18:51:54	70.187
07/23/02	18:52:54	69.476
07/23/02	18:53:54	70.215
07/23/02	18:54:54	68.964
07/23/02	18:55:54	68.623
07/23/02	18:56:54	66.490
07/23/02	18:57:54	68.253
07/23/02	18:58:54	70.016
07/23/02	18:59:54	70.699
07/23/02	19:00:54	68.481
07/23/02	19:01:54	69.163
07/23/02	19:02:54	68.765
07/23/02	19:03:54	70.642
07/23/02	19:04:54	66.120
07/23/02	19:05:54	69.220
07/23/02	19:06:54	66.774
07/23/02	19:07:54	66.063
07/23/02	19:08:54	70.215
07/23/02	19:09:54	69.305
07/23/02	19:10:54	70.699
07/23/02	19:11:54	72.149
07/23/02	19:12:54	72.092
07/23/02	19:13:54	71.324
07/23/02	19:14:54	67.684
07/23/02	19:15:54	67.002
07/23/02	19:16:54	69.675
07/23/02	19:17:54	69.817
07/23/02	19:18:54	71.097
07/23/02	19:19:54	68.481
07/23/02	19:20:54	71.154
07/23/02	19:21:54	70.329
07/23/02	19:22:54	69.817
07/23/02	19:23:54	70.130
07/23/02	19:24:54	70.983
07/23/02	19:25:54	70.357
07/23/02	19:26:54	68.481
07/23/02	19:27:54	70.016
07/23/02	19:28:54	70.329
07/23/02	19:29:54	69.959
07/23/02	19:30:54	69.789
07/23/02	19:31:54	69.675
07/23/02	19:32:54	70.841
07/23/02	19:33:54	70.244
07/23/02	19:34:54	70.813
07/23/02	19:35:54	68.765
07/23/02	19:36:54	67.144
07/23/02	19:37:54	70.130
07/23/02	19:38:54	70.272
07/23/02	19:39:54	67.684
07/23/02	19:40:54	67.400
07/23/02	19:41:54	67.229
07/23/02	19:42:54	68.082
07/23/02	19:43:54	69.163
07/23/02	19:44:54	69.049
07/23/02	19:45:54	70.670
07/23/02	19:46:54	68.537
07/23/02	19:47:54	70.357
07/23/02	19:48:54	69.220
07/23/02	19:49:54	69.561
07/23/02	19:50:54	68.168
07/23/02	19:51:54	69.447
07/23/02	19:52:54	70.187
07/23/02	19:53:54	69.675
07/23/02	19:54:54	70.158
07/23/02	19:55:54	67.371
07/23/02	19:56:54	66.376
07/23/02	19:57:54	66.660
07/23/02	19:58:54	68.082
07/23/02	19:59:54	69.675
07/23/02	20:00:54	68.281
07/23/02	20:01:54	63.162
07/23/02	20:02:54	72.434
07/23/02	20:03:54	69.618
07/23/02	20:04:54	71.381
07/23/02	20:05:54	68.281
07/23/02	20:06:54	70.102
07/23/02	20:07:54	69.021
07/23/02	20:08:54	66.746
07/23/02	20:09:54	66.234
07/23/02	20:10:54	67.087
07/23/02	20:11:54	68.793
07/23/02	20:12:54	66.689
07/23/02	20:13:54	67.400
07/23/02	20:14:54	65.665
07/23/02	20:15:54	67.286
07/23/02	20:16:54	67.542
07/23/02	20:17:54	66.916
07/23/02	20:18:54	66.632
07/23/02	20:19:54	65.210
07/23/02	20:20:54	67.286
07/23/02	20:21:54	68.338
07/23/02	20:22:54	66.774
07/23/02	20:23:54	64.044

AQUARENA SPRINGS AND UHLAND - NO. 6792 cont.

Date	Time	Pres (PSI)
07/23/02	20:24:54	65.551
07/23/02	20:25:54	68.822
07/23/02	20:26:54	67.883
07/23/02	20:27:54	68.395
07/23/02	20:28:54	68.509
07/23/02	20:29:54	68.082
07/23/02	20:30:54	67.940
07/23/02	20:31:54	66.632
07/23/02	20:32:54	64.613
07/23/02	20:33:54	65.807
07/23/02	20:34:54	67.428
07/23/02	20:35:54	70.329
07/23/02	20:36:54	66.035
07/23/02	20:37:54	68.026
07/23/02	20:38:54	69.760
07/23/02	20:39:54	70.813
07/23/02	20:40:54	71.154
07/23/02	20:41:54	69.533
07/23/02	20:42:54	69.391
07/23/02	20:43:54	65.893
07/23/02	20:44:54	71.410
07/23/02	20:45:54	70.158
07/23/02	20:46:54	70.386
07/23/02	20:47:54	69.675
07/23/02	20:48:54	69.647
07/23/02	20:49:54	69.248
07/23/02	20:50:54	68.623
07/23/02	20:51:54	69.391
07/23/02	20:52:54	68.225
07/23/02	20:53:54	68.168
07/23/02	20:54:54	68.936
07/23/02	20:55:54	69.334
07/23/02	20:56:54	67.542
07/23/02	20:57:54	68.367
07/23/02	20:58:54	66.006
07/23/02	20:59:54	64.414
07/23/02	21:00:54	67.002
07/23/02	21:01:54	64.670
07/23/02	21:02:54	64.983
07/23/02	21:03:54	67.940
07/23/02	21:04:54	66.291
07/23/02	21:05:54	67.002
07/23/02	21:06:54	63.902
07/23/02	21:07:54	67.286
07/23/02	21:08:54	65.324
07/23/02	21:09:54	66.689
07/23/02	21:10:54	66.660
07/23/02	21:11:54	66.205
07/23/02	21:12:54	66.831
07/23/02	21:13:54	65.807
07/23/02	21:14:54	68.481
07/23/02	21:15:54	64.101
07/23/02	21:16:54	66.205
07/23/02	21:17:54	66.860
07/23/02	21:18:54	65.239
07/23/02	21:19:54	66.888
07/23/02	21:20:54	67.997
07/23/02	21:21:54	65.807
07/23/02	21:22:54	67.514
07/23/02	21:23:54	65.011
07/23/02	21:24:54	66.632
07/23/02	21:25:54	62.395
07/23/02	21:26:54	66.006
07/23/02	21:27:54	64.613
07/23/02	21:28:54	67.115
07/23/02	21:29:54	65.978
07/23/02	21:30:54	67.514
07/23/02	21:31:54	67.201
07/23/02	21:32:54	67.684
07/23/02	21:33:54	67.400
07/23/02	21:34:54	67.059
07/23/02	21:35:54	66.831
07/23/02	21:36:54	66.433
07/23/02	21:37:54	65.523
07/23/02	21:38:54	67.002
07/23/02	21:39:54	67.997
07/23/02	21:40:54	66.689
07/23/02	21:41:54	63.873
07/23/02	21:42:54	65.381
07/23/02	21:43:54	67.428
07/23/02	21:44:54	68.111
07/23/02	21:45:54	67.542
07/23/02	21:46:54	66.632
07/23/02	21:47:54	41.691
07/23/02	21:48:54	45.985
07/23/02	21:49:54	48.886
07/23/02	21:50:54	49.540
07/23/02	21:51:54	48.147
07/23/02	21:52:54	47.692
07/23/02	21:53:54	45.331
07/23/02	21:54:54	46.753
07/23/02	21:55:54	48.517
07/23/02	21:56:54	46.839
07/23/02	21:57:54	44.165
07/23/02	21:58:54	58.072
07/23/02	21:59:54	64.755
07/23/02	22:00:54	64.101
07/23/02	22:01:54	63.561
07/23/02	22:02:54	62.508
07/23/02	22:03:54	60.831
07/23/02	22:04:54	62.281
07/23/02	22:05:54	62.707
07/23/02	22:06:54	64.414
07/23/02	22:07:54	64.357
07/23/02	22:08:54	65.494
07/23/02	22:09:54	64.812
07/23/02	22:10:54	64.385
07/23/02	22:11:54	65.494
07/23/02	22:12:54	63.191
07/23/02	22:13:54	62.309
07/23/02	22:14:54	62.679
07/23/02	22:15:54	60.205
07/23/02	22:16:54	62.565
07/23/02	22:17:54	64.641
07/23/02	22:18:54	64.869
07/23/02	22:19:54	64.328
07/23/02	22:20:54	69.618
07/23/02	22:21:54	65.125
07/23/02	22:22:54	70.727
07/23/02	22:23:54	69.447
07/23/02	22:24:54	68.225
07/23/02	22:25:54	68.168
07/23/02	22:26:54	69.760
07/23/02	22:27:54	68.566
07/23/02	22:28:54	67.286
07/23/02	22:29:54	69.931
07/23/02	22:30:54	69.817
07/23/02	22:31:54	69.391
07/23/02	22:32:54	70.386
07/23/02	22:33:54	67.656
07/23/02	22:34:54	70.926
07/23/02	22:35:54	70.414
07/23/02	22:36:54	71.268
07/23/02	22:37:54	71.495
07/23/02	22:38:54	69.988
07/23/02	22:39:54	70.471
07/23/02	22:40:54	67.087
07/23/02	22:41:54	69.391
07/23/02	22:42:54	69.533
07/23/02	22:43:54	71.751
07/23/02	22:44:54	71.552
07/23/02	22:45:54	71.097
07/23/02	22:46:54	71.268
07/23/02	22:47:54	70.357
07/23/02	22:48:54	70.443
07/23/02	22:49:54	71.779
07/23/02	22:50:54	71.523
07/23/02	22:51:54	72.291
07/23/02	22:52:54	72.547
07/23/02	22:53:54	72.746
07/23/02	22:54:54	72.718
07/23/02	22:55:54	72.206
07/23/02	22:56:54	71.381
07/23/02	22:57:54	70.841
07/23/02	22:58:54	70.016
07/23/02	22:59:54	69.533
07/23/02	23:00:54	67.542
07/23/02	23:01:54	70.784
07/23/02	23:02:54	69.874
07/23/02	23:03:54	67.115
07/23/02	23:04:54	70.699
07/23/02	23:05:54	71.097
07/23/02	23:06:54	69.078
07/23/02	23:07:54	69.192
07/23/02	23:08:54	70.642
07/23/02	23:09:54	73.713
07/23/02	23:10:54	73.031
07/23/02	23:11:54	75.050
07/23/02	23:12:54	72.775
07/23/02	23:13:54	70.414
07/23/02	23:14:54	72.064
07/23/02	23:15:54	70.016
07/23/02	23:16:54	71.211
07/23/02	23:17:54	68.594
07/23/02	23:18:54	69.504
07/23/02	23:19:54	69.760
07/23/02	23:20:54	69.305
07/23/02	23:21:54	69.561
07/23/02	23:22:54	69.618
07/23/02	23:23:54	72.434
07/23/02	23:24:54	70.130
07/23/02	23:25:54	72.803
07/23/02	23:26:54	73.429
07/23/02	23:27:54	74.481
07/23/02	23:28:54	74.339
07/23/02	23:29:54	74.879
07/23/02	23:30:54	71.922
07/23/02	23:31:54	71.751
07/23/02	23:32:54	72.547
07/23/02	23:33:54	70.500
07/23/02	23:34:54	71.068
07/23/02	23:35:54	73.400
07/23/02	23:36:54	70.244
07/23/02	23:37:54	73.144
07/23/02	23:38:54	72.803
07/23/02	23:39:54	74.936
07/23/02	23:40:54	74.197
07/23/02	23:41:54	75.192
07/23/02	23:42:54	73.258
07/23/02	23:43:54	71.922
07/23/02	23:44:54	74.623
07/23/02	23:45:54	75.021
07/23/02	23:46:54	73.287
07/23/02	23:47:54	73.770
07/23/02	23:48:54	73.287
07/23/02	23:49:54	74.566
07/23/02	23:50:54	75.562
07/23/02	23:51:54	72.291
07/23/02	23:52:54	75.078
07/23/02	23:53:54	76.699
07/23/02	23:54:54	74.709
07/23/02	23:55:54	76.756
07/23/02	23:56:54	74.310
07/23/02	23:57:54	75.619
07/23/02	23:58:54	74.140
07/23/02	23:59:54	75.135
07/24/02	00:00:54	73.628
07/24/02	00:01:54	75.078
07/24/02	00:02:54	74.168
07/24/02	00:03:54	76.415
07/24/02	00:04:54	75.647
07/24/02	00:05:54	76.045
07/24/02	00:06:54	76.529
07/24/02	00:07:54	77.325
07/24/02	00:08:54	76.102
07/24/02	00:09:54	75.732
07/24/02	00:10:54	77.666
07/24/02	00:11:54	77.695
07/24/02	00:12:54	76.415
07/24/02	00:13:54	77.922
07/24/02	00:14:54	77.353
07/24/02	00:15:54	76.301
07/24/02	00:16:54	76.273
07/24/02	00:17:54	78.036
07/24/02	00:18:54	75.476
07/24/02	00:19:54	78.320
07/24/02	00:20:54	78.093
07/24/02	00:21:54	76.216
07/24/02	00:22:54	77.837
07/24/02	00:23:54	73.059
07/24/02	00:24:54	76.586
07/24/02	00:25:54	76.756
07/24/02	00:26:54	75.476
07/24/02	00:27:54	75.704
07/24/02	00:28:54	77.353
07/24/02	00:29:54	77.097
07/24/02	00:30:54	77.496
07/24/02	00:31:54	79.003
07/24/02	00:32:54	77.979
07/24/02	00:33:54	78.775
07/24/02	00:34:54	76.955
07/24/02	00:35:54	78.377
07/24/02	00:36:54	75.476
07/24/02	00:37:54	77.439
07/24/02	00:38:54	77.041
07/24/02	00:39:54	76.642
07/24/02	00:40:54	76.244
07/24/02	00:41:54	77.041
07/24/02	00:42:54	77.524
07/24/02	00:43:54	77.581
07/24/02	00:44:54	78.121
07/24/02	00:45:54	76.159
07/24/02	00:46:54	79.600
07/24/02	00:47:54	76.443

AQUARENA SPRINGS AND UHLAND - NO. 6792 cont.

Date Time	Pres (PSI)
07/24/02 00:48:54	79.373
07/24/02 00:49:54	80.055
07/24/02 00:50:54	80.027
07/24/02 00:51:54	79.373
07/24/02 00:52:54	76.756
07/24/02 00:53:54	79.344
07/24/02 00:54:54	78.974
07/24/02 00:55:54	78.889
07/24/02 00:56:54	78.832
07/24/02 00:57:54	76.756
07/24/02 00:58:54	77.496
07/24/02 00:59:54	75.391
07/24/02 01:00:54	75.078
07/24/02 01:01:54	76.017
07/24/02 01:02:54	76.728
07/24/02 01:03:54	76.330
07/24/02 01:04:54	76.984
07/24/02 01:05:54	74.595
07/24/02 01:06:54	75.391
07/24/02 01:07:54	75.732
07/24/02 01:08:54	76.984
07/24/02 01:09:54	77.894
07/24/02 01:10:54	77.581
07/24/02 01:11:54	76.187
07/24/02 01:12:54	78.178
07/24/02 01:13:54	78.292
07/24/02 01:14:54	78.463
07/24/02 01:15:54	65.580
07/24/02 01:16:54	67.115
07/24/02 01:17:54	69.817
07/24/02 01:18:54	78.747
07/24/02 01:19:54	76.927
07/24/02 01:20:54	77.154
07/24/02 01:21:54	78.349
07/24/02 01:22:54	76.301
07/24/02 01:23:54	77.638
07/24/02 01:24:54	76.984
07/24/02 01:25:54	77.467
07/24/02 01:26:54	76.045
07/24/02 01:27:54	77.894
07/24/02 01:28:54	78.690
07/24/02 01:29:54	78.434
07/24/02 01:30:54	78.633
07/24/02 01:31:54	79.230
07/24/02 01:32:54	75.846
07/24/02 01:33:54	77.638
07/24/02 01:34:54	77.353
07/24/02 01:35:54	79.117
07/24/02 01:36:54	79.088
07/24/02 01:37:54	77.268
07/24/02 01:38:54	79.373
07/24/02 01:39:54	77.240
07/24/02 01:40:54	75.875
07/24/02 01:41:54	77.581
07/24/02 01:42:54	78.377
07/24/02 01:43:54	78.036
07/24/02 01:44:54	76.699
07/24/02 01:45:54	77.752
07/24/02 01:46:54	78.377
07/24/02 01:47:54	76.443
07/24/02 01:48:54	75.021
07/24/02 01:49:54	75.960
07/24/02 01:50:54	77.382
07/24/02 01:51:54	76.756
07/24/02 01:52:54	76.984
07/24/02 01:53:54	77.439

Date Time	Pres (PSI)
07/24/02 01:54:54	77.951
07/24/02 01:55:54	78.320
07/24/02 01:56:54	78.150
07/24/02 01:57:54	77.467
07/24/02 01:58:54	78.178
07/24/02 01:59:54	76.785
07/24/02 02:00:54	80.965
07/24/02 02:01:54	76.671
07/24/02 02:02:54	79.145
07/24/02 02:03:54	78.576
07/24/02 02:04:54	77.666
07/24/02 02:05:54	79.060
07/24/02 02:06:54	77.865
07/24/02 02:07:54	79.344
07/24/02 02:08:54	78.178
07/24/02 02:09:54	78.889
07/24/02 02:10:54	78.775
07/24/02 02:11:54	78.832
07/24/02 02:12:54	76.756
07/24/02 02:13:54	78.519
07/24/02 02:14:54	78.036
07/24/02 02:15:54	78.605
07/24/02 02:16:54	68.736
07/24/02 02:17:54	70.016
07/24/02 02:18:54	70.386
07/24/02 02:19:54	69.647
07/24/02 02:20:54	68.537
07/24/02 02:21:54	68.992
07/24/02 02:22:54	69.931
07/24/02 02:23:54	69.732
07/24/02 02:24:54	69.106
07/24/02 02:25:54	68.481
07/24/02 02:26:54	68.253
07/24/02 02:27:54	79.202
07/24/02 02:28:54	76.671
07/24/02 02:29:54	76.216
07/24/02 02:30:54	78.662
07/24/02 02:31:54	77.695
07/24/02 02:32:54	77.012
07/24/02 02:33:54	77.723
07/24/02 02:34:54	77.439
07/24/02 02:35:54	78.320
07/24/02 02:36:54	77.979
07/24/02 02:37:54	78.150
07/24/02 02:38:54	77.837
07/24/02 02:39:54	76.642
07/24/02 02:40:54	78.434
07/24/02 02:41:54	77.723
07/24/02 02:42:54	77.353
07/24/02 02:43:54	79.230
07/24/02 02:44:54	77.410
07/24/02 02:45:54	78.093
07/24/02 02:46:54	76.785
07/24/02 02:47:54	78.036
07/24/02 02:48:54	77.439
07/24/02 02:49:54	77.410
07/24/02 02:50:54	77.951
07/24/02 02:51:54	74.538
07/24/02 02:52:54	77.097
07/24/02 02:53:54	76.330
07/24/02 02:54:54	77.154
07/24/02 02:55:54	75.334
07/24/02 02:56:54	76.586
07/24/02 02:57:54	83.013
07/24/02 02:58:54	76.671
07/24/02 02:59:54	76.813

Date Time	Pres (PSI)
07/24/02 03:00:54	78.178
07/24/02 03:01:54	78.434
07/24/02 03:02:54	76.443
07/24/02 03:03:54	76.898
07/24/02 03:04:54	75.249
07/24/02 03:05:54	76.671
07/24/02 03:06:54	77.382
07/24/02 03:07:54	76.642
07/24/02 03:08:54	76.443
07/24/02 03:09:54	76.557
07/24/02 03:10:54	76.529
07/24/02 03:11:54	76.898
07/24/02 03:12:54	74.794
07/24/02 03:13:54	77.410
07/24/02 03:14:54	76.500
07/24/02 03:15:54	75.391
07/24/02 03:16:54	75.960
07/24/02 03:17:54	75.732
07/24/02 03:18:54	75.818
07/24/02 03:19:54	75.249
07/24/02 03:20:54	75.590
07/24/02 03:21:54	74.936
07/24/02 03:22:54	75.875
07/24/02 03:23:54	75.078
07/24/02 03:24:54	75.732
07/24/02 03:25:54	75.761
07/24/02 03:26:54	76.699
07/24/02 03:27:54	75.363
07/24/02 03:28:54	75.420
07/24/02 03:29:54	76.699
07/24/02 03:30:54	75.192
07/24/02 03:31:54	75.818
07/24/02 03:32:54	76.813
07/24/02 03:33:54	76.074
07/24/02 03:34:54	75.249
07/24/02 03:35:54	75.789
07/24/02 03:36:54	75.704
07/24/02 03:37:54	75.704
07/24/02 03:38:54	76.785
07/24/02 03:39:54	75.420
07/24/02 03:40:54	76.642
07/24/02 03:41:54	76.557
07/24/02 03:42:54	76.415
07/24/02 03:43:54	76.330
07/24/02 03:44:54	75.533
07/24/02 03:45:54	74.652
07/24/02 03:46:54	77.154
07/24/02 03:47:54	75.277
07/24/02 03:48:54	75.277
07/24/02 03:49:54	76.472
07/24/02 03:50:54	77.012
07/24/02 03:51:54	76.017
07/24/02 03:52:54	77.097
07/24/02 03:53:54	76.699
07/24/02 03:54:54	75.050
07/24/02 03:55:54	67.428
07/24/02 03:56:54	70.016
07/24/02 03:57:54	68.139
07/24/02 03:58:54	75.334
07/24/02 03:59:54	73.969
07/24/02 04:00:54	73.372
07/24/02 04:01:54	75.249
07/24/02 04:02:54	72.490
07/24/02 04:03:54	73.002
07/24/02 04:04:54	72.576
07/24/02 04:05:54	72.462

Date Time	Pres (PSI
07/24/02 04:06:54	71.068
07/24/02 04:07:54	72.320
07/24/02 04:08:54	71.609
07/24/02 04:09:54	69.902
07/24/02 04:10:54	71.723
07/24/02 04:11:54	71.097
07/24/02 04:12:54	72.519
07/24/02 04:13:54	72.775
07/24/02 04:14:54	73.543
07/24/02 04:15:54	72.490
07/24/02 04:16:54	71.836
07/24/02 04:17:54	73.144
07/24/02 04:18:54	72.945
07/24/02 04:19:54	73.230
07/24/02 04:20:54	73.685
07/24/02 04:21:54	73.372
07/24/02 04:22:54	73.543
07/24/02 04:23:54	75.818
07/24/02 04:24:54	76.159
07/24/02 04:25:54	75.732
07/24/02 04:26:54	75.761
07/24/02 04:27:54	73.287
07/24/02 04:28:54	74.623
07/24/02 04:29:54	73.201
07/24/02 04:30:54	75.533
07/24/02 04:31:54	72.149
07/24/02 04:32:54	72.661
07/24/02 04:33:54	73.230
07/24/02 04:34:54	74.424
07/24/02 04:35:54	72.064
07/24/02 04:36:54	73.400
07/24/02 04:37:54	74.709
07/24/02 04:38:54	73.144
07/24/02 04:39:54	74.396
07/24/02 04:40:54	73.742
07/24/02 04:41:54	75.562
07/24/02 04:42:54	73.742
07/24/02 04:43:54	74.396
07/24/02 04:44:54	77.581
07/24/02 04:45:54	74.254
07/24/02 04:46:54	76.984
07/24/02 04:47:54	73.685
07/24/02 04:48:54	73.543
07/24/02 04:49:54	72.035
07/24/02 04:50:54	73.230
07/24/02 04:51:54	75.732
07/24/02 04:52:54	72.320
07/24/02 04:53:54	71.779
07/24/02 04:54:54	75.846
07/24/02 04:55:54	74.310
07/24/02 04:56:54	75.590
07/24/02 04:57:54	74.424
07/24/02 04:58:54	74.709
07/24/02 04:59:54	77.666
07/24/02 05:00:54	75.931
07/24/02 05:01:54	68.566
07/24/02 05:02:54	70.471
07/24/02 05:03:54	71.723
07/24/02 05:04:54	72.889
07/24/02 05:05:54	72.576
07/24/02 05:06:54	74.794
07/24/02 05:07:54	73.884
07/24/02 05:08:54	73.002
07/24/02 05:09:54	69.163
07/24/02 05:10:54	71.040
07/24/02 05:11:54	72.206

AQUARENA SPRINGS AND UHLAND - NO. 6792 cont.

Date	Time	Pres (PSI)
07/24/02	05:12:54	74.254
07/24/02	05:13:54	70.727
07/24/02	05:14:54	72.917
07/24/02	05:15:54	75.505
07/24/02	05:16:54	73.685
07/24/02	05:17:54	75.078
07/24/02	05:18:54	81.705
07/24/02	05:19:54	77.154
07/24/02	05:20:54	74.680
07/24/02	05:21:54	75.647
07/24/02	05:22:54	73.912
07/24/02	05:23:54	75.619
07/24/02	05:24:54	75.306
07/24/02	05:25:54	77.154
07/24/02	05:26:54	76.017
07/24/02	05:27:54	77.666
07/24/02	05:28:54	77.979
07/24/02	05:29:54	76.500
07/24/02	05:30:54	76.529
07/24/02	05:31:54	77.410
07/24/02	05:32:54	75.562
07/24/02	05:33:54	75.732
07/24/02	05:34:54	77.496
07/24/02	05:35:54	76.415
07/24/02	05:36:54	77.012
07/24/02	05:37:54	77.183
07/24/02	05:38:54	77.211
07/24/02	05:39:54	78.064
07/24/02	05:40:54	76.301
07/24/02	05:41:54	77.524
07/24/02	05:42:54	78.121
07/24/02	05:43:54	78.150
07/24/02	05:44:54	73.855
07/24/02	05:45:54	76.216
07/24/02	05:46:54	75.960
07/24/02	05:47:54	75.875
07/24/02	05:48:54	73.912
07/24/02	05:49:54	76.500
07/24/02	05:50:54	78.775
07/24/02	05:51:54	77.211
07/24/02	05:52:54	76.074
07/24/02	05:53:54	75.021
07/24/02	05:54:54	76.785
07/24/02	05:55:54	76.443
07/24/02	05:56:54	74.652
07/24/02	05:57:54	76.187
07/24/02	05:58:54	76.955
07/24/02	05:59:54	75.988
07/24/02	06:00:54	77.126
07/24/02	06:01:54	76.898
07/24/02	06:02:54	71.979
07/24/02	06:03:54	76.756
07/24/02	06:04:54	75.192
07/24/02	06:05:54	73.685
07/24/02	06:06:54	72.917
07/24/02	06:07:54	75.334
07/24/02	06:08:54	76.273
07/24/02	06:09:54	76.017
07/24/02	06:10:54	74.652
07/24/02	06:11:54	73.827
07/24/02	06:12:54	75.391
07/24/02	06:13:54	74.225
07/24/02	06:14:54	74.339
07/24/02	06:15:54	74.083
07/24/02	06:16:54	73.372
07/24/02	06:17:54	73.628
07/24/02	06:18:54	75.192
07/24/02	06:19:54	78.662
07/24/02	06:20:54	74.851
07/24/02	06:21:54	74.083
07/24/02	06:22:54	72.035
07/24/02	06:23:54	74.055
07/24/02	06:24:54	71.609
07/24/02	06:25:54	73.400
07/24/02	06:26:54	74.055
07/24/02	06:27:54	73.912
07/24/02	06:28:54	74.197
07/24/02	06:29:54	76.045
07/24/02	06:30:54	75.562
07/24/02	06:31:54	74.111
07/24/02	06:32:54	73.628
07/24/02	06:33:54	72.718
07/24/02	06:34:54	72.661
07/24/02	06:35:54	75.818
07/24/02	06:36:54	72.291
07/24/02	06:37:54	75.505
07/24/02	06:38:54	74.709
07/24/02	06:39:54	73.031
07/24/02	06:40:54	74.936
07/24/02	06:41:54	71.893
07/24/02	06:42:54	73.486
07/24/02	06:43:54	73.144
07/24/02	06:44:54	72.490
07/24/02	06:45:54	73.002
07/24/02	06:46:54	73.258
07/24/02	06:47:54	71.268
07/24/02	06:48:54	76.017
07/24/02	06:49:54	72.974
07/24/02	06:50:54	72.917
07/24/02	06:51:54	71.865
07/24/02	06:52:54	73.173
07/24/02	06:53:54	71.836
07/24/02	06:54:54	74.566
07/24/02	06:55:54	69.732
07/24/02	06:56:54	70.215
07/24/02	06:57:54	71.893
07/24/02	06:58:54	73.827
07/24/02	06:59:54	71.979
07/24/02	07:00:54	70.813
07/24/02	07:01:54	71.779
07/24/02	07:02:54	69.703
07/24/02	07:03:54	71.666
07/24/02	07:04:54	71.751
07/24/02	07:05:54	72.462
07/24/02	07:06:54	71.125
07/24/02	07:07:54	72.490
07/24/02	07:08:54	73.002
07/24/02	07:09:54	72.434
07/24/02	07:10:54	71.865
07/24/02	07:11:54	69.902
07/24/02	07:12:54	71.324
07/24/02	07:13:54	71.381
07/24/02	07:14:54	64.755
07/24/02	07:15:54	70.244
07/24/02	07:16:54	67.315
07/24/02	07:17:54	65.893
07/24/02	07:18:54	68.225
07/24/02	07:19:54	70.414
07/24/02	07:20:54	69.618
07/24/02	07:21:54	68.281
07/24/02	07:22:54	66.604
07/24/02	07:23:54	68.708
07/24/02	07:24:54	65.665
07/24/02	07:25:54	67.457
07/24/02	07:26:54	68.623
07/24/02	07:27:54	66.717
07/24/02	07:28:54	69.078
07/24/02	07:29:54	66.461
07/24/02	07:30:54	68.850
07/24/02	07:31:54	70.329
07/24/02	07:32:54	68.168
07/24/02	07:33:54	70.215
07/24/02	07:34:54	70.557
07/24/02	07:35:54	68.338
07/24/02	07:36:54	68.651
07/24/02	07:37:54	68.111
07/24/02	07:38:54	66.262
07/24/02	07:39:54	70.357
07/24/02	07:40:54	72.434
07/24/02	07:41:54	70.329
07/24/02	07:42:54	72.689
07/24/02	07:43:54	71.296
07/24/02	07:44:54	71.381
07/24/02	07:45:54	72.547
07/24/02	07:46:54	70.443
07/24/02	07:47:54	71.922
07/24/02	07:48:54	68.111
07/24/02	07:49:54	69.533
07/24/02	07:50:54	73.287
07/24/02	07:51:54	72.007
07/24/02	07:52:54	71.865
07/24/02	07:53:54	73.855
07/24/02	07:54:54	72.434
07/24/02	07:55:54	72.519
07/24/02	07:56:54	73.656
07/24/02	07:57:54	69.618
07/24/02	07:58:54	72.604
07/24/02	07:59:54	74.367
07/24/02	08:00:54	75.732
07/24/02	08:01:54	72.092
07/24/02	08:02:54	71.893
07/24/02	08:03:54	71.723
07/24/02	08:04:54	71.495
07/24/02	08:05:54	72.519
07/24/02	08:06:54	68.879
07/24/02	08:07:54	71.040
07/24/02	08:08:54	72.149
07/24/02	08:09:54	70.613
07/24/02	08:10:54	72.263
07/24/02	08:11:54	68.936
07/24/02	08:12:54	73.514
07/24/02	08:13:54	68.054
07/24/02	08:14:54	73.429
07/24/02	08:15:54	69.447
07/24/02	08:16:54	69.391
07/24/02	08:17:54	69.931
07/24/02	08:18:54	72.007
07/24/02	08:19:54	70.187
07/24/02	08:20:54	68.793
07/24/02	08:21:54	69.078
07/24/02	08:22:54	70.158
07/24/02	08:23:54	54.147
07/24/02	08:24:54	53.351
07/24/02	08:25:54	55.512
07/24/02	08:26:54	52.128
07/24/02	08:27:54	53.351
07/24/02	08:28:54	53.522
07/24/02	08:29:54	66.205
07/24/02	08:30:54	68.395
07/24/02	08:31:54	65.694
07/24/02	08:32:54	68.168
07/24/02	08:33:54	62.224
07/24/02	08:34:54	65.893
07/24/02	08:35:54	65.694
07/24/02	08:36:54	61.712
07/24/02	08:37:54	62.082
07/24/02	08:38:54	65.267
07/24/02	08:39:54	66.035
07/24/02	08:40:54	65.665
07/24/02	08:41:54	64.272
07/24/02	08:42:54	64.784
07/24/02	08:43:54	60.319
07/24/02	08:44:54	64.954
07/24/02	08:45:54	60.148
07/24/02	08:46:54	51.759
07/24/02	08:47:54	53.522
07/24/02	08:48:54	51.929
07/24/02	08:49:54	52.185
07/24/02	08:50:54	53.067
07/24/02	08:51:54	51.730
07/24/02	08:52:54	54.972
07/24/02	08:53:54	55.257
07/24/02	08:54:54	60.802
07/24/02	08:55:54	60.120
07/24/02	08:56:54	60.916
07/24/02	08:57:54	62.252
07/24/02	08:58:54	63.618
07/24/02	08:59:54	65.210
07/24/02	09:00:54	63.276
07/24/02	09:01:54	64.442
07/24/02	09:02:54	73.912
07/24/02	09:03:54	66.376
07/24/02	09:04:54	64.357
07/24/02	09:05:54	67.855
07/24/02	09:06:54	68.850
07/24/02	09:07:54	65.921
07/24/02	09:08:54	67.286
07/24/02	09:09:54	64.357
07/24/02	09:10:54	68.850
07/24/02	09:11:54	68.708
07/24/02	09:12:54	61.911
07/24/02	09:13:54	64.385
07/24/02	09:14:54	65.949
07/24/02	09:15:54	63.248
07/24/02	09:16:54	65.182
07/24/02	09:17:54	65.295
07/24/02	09:18:54	63.646
07/24/02	09:19:54	62.423
07/24/02	09:20:54	59.750
07/24/02	09:21:54	62.025
07/24/02	09:22:54	63.134
07/24/02	09:23:54	62.053
07/24/02	09:24:54	63.817
07/24/02	09:25:54	63.873
07/24/02	09:26:54	62.736
07/24/02	09:27:54	45.616
07/24/02	09:28:54	46.440
07/24/02	09:29:54	46.412
07/24/02	09:30:54	47.436
07/24/02	09:31:54	46.554
07/24/02	09:32:54	46.071
07/24/02	09:33:54	61.058
07/24/02	09:34:54	63.219
07/24/02	09:35:54	63.191

AQUARENA SPRINGS AND UHLAND - NO. 6792 cont.

Date Time	Pres (PSI)	Date Time	Pres (PSI)	Date Time	Pres (PSI)	Date Time	Pres (PSI
07/24/02 09:36:54	64.897	07/24/02 10:42:54	68.310	07/24/02 11:48:54	64.784	07/24/02 12:54:54	63.020
07/24/02 09:37:54	64.272	07/24/02 10:43:54	67.059	07/24/02 11:49:54	70.158	07/24/02 12:55:54	64.755
07/24/02 09:38:54	62.281	07/24/02 10:44:54	68.054	07/24/02 11:50:54	66.490	07/24/02 12:56:54	64.755
07/24/02 09:39:54	63.703	07/24/02 10:45:54	67.940	07/24/02 11:51:54	69.561	07/24/02 12:57:54	61.826
07/24/02 09:40:54	66.149	07/24/02 10:46:54	68.225	07/24/02 11:52:54	68.879	07/24/02 12:58:54	61.314
07/24/02 09:41:54	65.807	07/24/02 10:47:54	67.514	07/24/02 11:53:54	65.893	07/24/02 12:59:54	65.210
07/24/02 09:42:54	63.162	07/24/02 10:48:54	66.376	07/24/02 11:54:54	69.192	07/24/02 13:00:54	65.096
07/24/02 09:43:54	71.808	07/24/02 10:49:54	67.826	07/24/02 11:55:54	69.504	07/24/02 13:01:54	62.963
07/24/02 09:44:54	68.281	07/24/02 10:50:54	67.371	07/24/02 11:56:54	67.713	07/24/02 13:02:54	61.456
07/24/02 09:45:54	70.727	07/24/02 10:51:54	66.120	07/24/02 11:57:54	65.352	07/24/02 13:03:54	61.854
07/24/02 09:46:54	67.457	07/24/02 10:52:54	63.447	07/24/02 11:58:54	68.310	07/24/02 13:04:54	62.309
07/24/02 09:47:54	68.736	07/24/02 10:53:54	68.736	07/24/02 11:59:54	68.594	07/24/02 13:05:54	63.077
07/24/02 09:48:54	70.557	07/24/02 10:54:54	65.239	07/24/02 12:00:54	63.276	07/24/02 13:06:54	63.646
07/24/02 09:49:54	73.855	07/24/02 10:55:54	70.443	07/24/02 12:01:54	66.006	07/24/02 13:07:54	62.025
07/24/02 09:50:54	67.770	07/24/02 10:56:54	68.225	07/24/02 12:02:54	66.405	07/24/02 13:08:54	63.561
07/24/02 09:51:54	70.187	07/24/02 10:57:54	65.665	07/24/02 12:03:54	65.921	07/24/02 13:09:54	62.452
07/24/02 09:52:54	70.102	07/24/02 10:58:54	70.386	07/24/02 12:04:54	66.746	07/24/02 13:10:54	59.522
07/24/02 09:53:54	68.082	07/24/02 10:59:54	67.201	07/24/02 12:05:54	64.670	07/24/02 13:11:54	63.902
07/24/02 09:54:54	67.542	07/24/02 11:00:54	42.943	07/24/02 12:06:54	64.670	07/24/02 13:12:54	61.314
07/24/02 09:55:54	69.021	07/24/02 11:01:54	31.311	07/24/02 12:07:54	64.670	07/24/02 13:13:54	64.300
07/24/02 09:56:54	71.154	07/24/02 11:02:54	25.197	07/24/02 12:08:54	67.343	07/24/02 13:14:54	65.921
07/24/02 09:57:54	70.955	07/24/02 11:03:54	26.476	07/24/02 12:09:54	67.286	07/24/02 13:15:54	63.219
07/24/02 09:58:54	69.248	07/24/02 11:04:54	28.979	07/24/02 12:10:54	53.835	07/24/02 13:16:54	64.073
07/24/02 09:59:54	71.751	07/24/02 11:05:54	28.894	07/24/02 12:11:54	52.953	07/24/02 13:17:54	66.348
07/24/02 10:00:54	69.988	07/24/02 11:06:54	29.263	07/24/02 12:12:54	49.825	07/24/02 13:18:54	65.694
07/24/02 10:01:54	69.106	07/24/02 11:07:54	28.609	07/24/02 12:13:54	51.787	07/24/02 13:19:54	62.907
07/24/02 10:02:54	69.277	07/24/02 11:08:54	28.439	07/24/02 12:14:54	52.725	07/24/02 13:20:54	63.845
07/24/02 10:03:54	69.248	07/24/02 11:09:54	30.060	07/24/02 12:15:54	56.081	07/24/02 13:21:54	63.276
07/24/02 10:04:54	70.869	07/24/02 11:10:54	29.406	07/24/02 12:16:54	38.136	07/24/02 13:22:54	64.158
07/24/02 10:05:54	66.660	07/24/02 11:11:54	29.832	07/24/02 12:17:54	35.406	07/24/02 13:23:54	66.177
07/24/02 10:06:54	62.764	07/24/02 11:12:54	28.979	07/24/02 12:18:54	52.697	07/24/02 13:24:54	65.921
07/24/02 10:07:54	61.229	07/24/02 11:13:54	27.699	07/24/02 12:19:54	54.801	07/24/02 13:25:54	68.139
07/24/02 10:08:54	60.375	07/24/02 11:14:54	29.576	07/24/02 12:20:54	64.272	07/24/02 13:26:54	69.334
07/24/02 10:09:54	61.257	07/24/02 11:15:54	21.756	07/24/02 12:21:54	69.192	07/24/02 13:27:54	66.916
07/24/02 10:10:54	62.423	07/24/02 11:16:54	22.580	07/24/02 12:22:54	64.442	07/24/02 13:28:54	61.996
07/24/02 10:11:54	60.831	07/24/02 11:17:54	22.979	07/24/02 12:23:54	63.618	07/24/02 13:29:54	66.660
07/24/02 10:12:54	62.423	07/24/02 11:18:54	22.324	07/24/02 12:24:54	68.850	07/24/02 13:30:54	64.328
07/24/02 10:13:54	63.561	07/24/02 11:19:54	22.666	07/24/02 12:25:54	67.542	07/24/02 13:31:54	65.608
07/24/02 10:14:54	58.925	07/24/02 11:20:54	22.012	07/24/02 12:26:54	65.494	07/24/02 13:32:54	69.675
07/24/02 10:15:54	48.033	07/24/02 11:21:54	22.779	07/24/02 12:27:54	66.006	07/24/02 13:33:54	69.106
07/24/02 10:16:54	48.716	07/24/02 11:22:54	29.519	07/24/02 12:28:54	67.201	07/24/02 13:34:54	69.049
07/24/02 10:17:54	48.829	07/24/02 11:23:54	31.851	07/24/02 12:29:54	67.940	07/24/02 13:35:54	66.660
07/24/02 10:18:54	48.175	07/24/02 11:24:54	39.416	07/24/02 12:30:54	68.566	07/24/02 13:36:54	69.220
07/24/02 10:19:54	49.028	07/24/02 11:25:54	43.398	07/24/02 12:31:54	66.262	07/24/02 13:37:54	67.770
07/24/02 10:20:54	46.128	07/24/02 11:26:54	46.896	07/24/02 12:32:54	67.997	07/24/02 13:38:54	69.789
07/24/02 10:21:54	47.123	07/24/02 11:27:54	52.043	07/24/02 12:33:54	68.936	07/24/02 13:39:54	69.163
07/24/02 10:22:54	60.831	07/24/02 11:28:54	60.887	07/24/02 12:34:54	67.514	07/24/02 13:40:54	70.016
07/24/02 10:23:54	64.840	07/24/02 11:29:54	64.584	07/24/02 12:35:54	66.746	07/24/02 13:41:54	68.879
07/24/02 10:24:54	72.121	07/24/02 11:30:54	64.272	07/24/02 12:36:54	66.234	07/24/02 13:42:54	53.863
07/24/02 10:25:54	71.040	07/24/02 11:31:54	60.745	07/24/02 12:37:54	65.381	07/24/02 13:43:54	50.877
07/24/02 10:26:54	68.225	07/24/02 11:32:54	63.731	07/24/02 12:38:54	66.632	07/24/02 13:44:54	51.787
07/24/02 10:27:54	67.713	07/24/02 11:33:54	65.381	07/24/02 12:39:54	66.632	07/24/02 13:45:54	54.716
07/24/02 10:28:54	71.154	07/24/02 11:34:54	69.959	07/24/02 12:40:54	64.385	07/24/02 13:46:54	0.483
07/24/02 10:29:54	68.111	07/24/02 11:35:54	68.509	07/24/02 12:41:54	66.547	07/24/02 13:47:54	0.370
07/24/02 10:30:54	69.504	07/24/02 11:36:54	66.234	07/24/02 12:42:54	65.694	07/24/02 13:48:54	0.427
07/24/02 10:31:54	72.206	07/24/02 11:37:54	68.452	07/24/02 12:43:54	63.674	07/24/02 13:49:54	0.427
07/24/02 10:32:54	66.348	07/24/02 11:38:54	70.642	07/24/02 12:44:54	65.210	07/24/02 13:50:54	0.370
07/24/02 10:33:54	69.732	07/24/02 11:39:54	65.551	07/24/02 12:45:54	65.324	07/24/02 13:51:54	0.398
07/24/02 10:34:54	67.883	07/24/02 11:40:54	67.286	07/24/02 12:46:54	65.324	07/24/02 13:52:54	0.398
07/24/02 10:35:54	69.476	07/24/02 11:41:54	66.490	07/24/02 12:47:54	65.039	07/24/02 13:53:54	0.427
07/24/02 10:36:54	68.879	07/24/02 11:42:54	66.774	07/24/02 12:48:54	64.499	07/24/02 13:54:54	0.341
07/24/02 10:37:54	68.509	07/24/02 11:43:54	64.101	07/24/02 12:49:54	66.348	07/24/02 13:55:54	0.313
07/24/02 10:38:54	66.177	07/24/02 11:44:54	64.954	07/24/02 12:50:54	64.016	07/24/02 13:56:54	0.313
07/24/02 10:39:54	70.016	07/24/02 11:45:54	66.433	07/24/02 12:51:54	67.172	07/24/02 13:57:54	0.313
07/24/02 10:40:54	65.438	07/24/02 11:46:54	65.949	07/24/02 12:52:54	67.172	07/24/02 13:58:54	0.341
07/24/02 10:41:54	66.660	07/24/02 11:47:54	67.627	07/24/02 12:53:54	63.788	07/24/02 13:59:54	0.341

AQUARENA SPRINGS AND UHLAND - NO. 6792 cont.

Date	Time	Pres (PSI)
07/24/02	14:00:54	0.370
07/24/02	14:01:54	0.370
07/24/02	14:02:54	0.341
07/24/02	14:03:54	0.313
07/24/02	14:04:54	0.284
07/24/02	14:05:54	0.284
07/24/02	14:06:54	0.313
07/24/02	14:07:54	0.284
07/24/02	14:08:54	0.256
07/24/02	14:09:54	0.256
07/24/02	14:10:54	0.284
07/24/02	14:11:54	0.199
07/24/02	14:12:54	0.199
07/24/02	14:13:54	0.256
07/24/02	14:14:54	0.171
07/24/02	14:15:54	0.199
07/24/02	14:16:54	0.284
07/24/02	14:17:54	0.199
07/24/02	14:18:54	0.256
07/24/02	14:19:54	0.284
07/24/02	14:20:54	0.256
07/24/02	14:21:54	0.284
07/24/02	14:22:54	0.256
07/24/02	14:23:54	0.284
07/24/02	14:24:54	0.256
07/24/02	14:25:54	0.256
07/24/02	14:26:54	0.284
07/24/02	14:27:54	0.256
07/24/02	14:28:54	0.284
07/24/02	14:29:54	0.370
07/24/02	14:30:54	0.284
07/24/02	14:31:54	0.341
07/24/02	14:32:54	0.313
07/24/02	14:33:54	0.199
07/24/02	14:34:54	0.256
07/24/02	14:35:54	0.256
07/24/02	14:36:54	0.142
07/24/02	14:37:54	0.199
07/24/02	14:38:54	0.171
07/24/02	14:39:54	0.142
07/24/02	14:40:54	0.142
07/24/02	14:41:54	0.142
07/24/02	14:42:54	0.171
07/24/02	14:43:54	0.199
07/24/02	14:44:54	0.284
07/24/02	14:45:54	0.171
07/24/02	14:46:54	0.142
07/24/02	14:47:54	0.142
07/24/02	14:48:54	0.284
07/24/02	14:49:54	0.199
07/24/02	14:50:54	0.171
07/24/02	14:51:54	0.171
07/24/02	14:52:54	0.142
07/24/02	14:53:54	0.171
07/24/02	14:54:54	0.284
07/24/02	14:55:54	0.199
07/24/02	14:56:54	0.256
07/24/02	14:57:54	0.313
07/24/02	14:58:54	0.313
07/24/02	14:59:54	0.256
07/24/02	15:00:54	0.142
07/24/02	15:01:54	0.256
07/24/02	15:02:54	0.284
07/24/02	15:03:54	0.284
07/24/02	15:04:54	0.284
07/24/02	15:05:54	0.313
07/24/02	15:06:54	0.313
07/24/02	15:07:54	0.284
07/24/02	15:08:54	0.370
07/24/02	15:09:54	0.370
07/24/02	15:10:54	0.313
07/24/02	15:11:54	0.313
07/24/02	15:12:54	0.341
07/24/02	15:13:54	0.370
07/24/02	15:14:54	0.313
07/24/02	15:15:54	0.313
07/24/02	15:16:54	0.398
07/24/02	15:17:54	0.313
07/24/02	15:18:54	0.313
07/24/02	15:19:54	0.313
07/24/02	15:20:54	0.313
07/24/02	15:21:54	0.398
07/24/02	15:22:54	0.341
07/24/02	15:23:54	0.370
07/24/02	15:24:54	0.313
07/24/02	15:25:54	0.370
07/24/02	15:26:54	0.370
07/24/02	15:27:54	0.341
07/24/02	15:28:54	0.341
07/24/02	15:29:54	0.313
07/24/02	15:30:54	0.341
07/24/02	15:31:54	0.313
07/24/02	15:32:54	0.199
07/24/02	15:33:54	0.313

Date	Time	Pres (PSI)

Date	Time	Pres (PSI

CARLSON CIR. - NO. 7557

Date	Time	Pres (PSI)
07/22/02	14:15:53	0.256
07/22/02	14:16:53	0.199
07/22/02	14:17:53	0.199
07/22/02	14:18:53	0.256
07/22/02	14:19:53	0.256
07/22/02	14:20:53	0.199
07/22/02	14:21:53	0.256
07/22/02	14:22:53	0.199
07/22/02	14:23:53	0.199
07/22/02	14:24:53	0.199
07/22/02	14:25:53	0.199
07/22/02	14:26:53	0.199
07/22/02	14:27:53	0.142
07/22/02	14:28:53	0.199
07/22/02	14:29:53	0.256
07/22/02	14:30:53	0.199
07/22/02	14:31:53	0.199
07/22/02	14:32:53	0.142
07/22/02	14:33:53	0.142
07/22/02	14:34:53	0.142
07/22/02	14:35:53	0.199
07/22/02	14:36:53	0.142
07/22/02	14:37:53	0.199
07/22/02	14:38:53	0.142
07/22/02	14:39:53	0.199
07/22/02	14:40:53	0.199
07/22/02	14:41:53	0.199
07/22/02	14:42:53	0.142
07/22/02	14:43:53	0.199
07/22/02	14:44:53	0.199
07/22/02	14:45:53	0.199
07/22/02	14:46:53	0.199
07/22/02	14:47:53	0.199
07/22/02	14:48:53	0.199
07/22/02	14:49:53	0.199
07/22/02	14:50:53	0.142
07/22/02	14:51:53	0.199
07/22/02	14:52:53	0.199
07/22/02	14:53:53	0.199
07/22/02	14:54:53	0.199
07/22/02	14:55:53	90.293
07/22/02	14:56:53	89.241
07/22/02	14:57:53	89.440
07/22/02	14:58:53	89.724
07/22/02	14:59:53	88.871
07/22/02	15:00:53	89.241
07/22/02	15:01:53	89.667
07/22/02	15:02:53	89.184
07/22/02	15:03:53	89.440
07/22/02	15:04:53	90.976
07/22/02	15:05:53	89.923
07/22/02	15:06:53	89.497
07/22/02	15:07:53	89.667
07/22/02	15:08:53	89.411
07/22/02	15:09:53	89.810
07/22/02	15:10:53	89.554
07/22/02	15:11:53	90.236
07/22/02	15:12:53	90.720
07/22/02	15:13:53	89.440
07/22/02	15:14:53	89.667
07/22/02	15:15:53	89.611
07/22/02	15:16:53	89.866
07/22/02	15:17:53	90.407
07/22/02	15:18:53	90.549
07/22/02	15:19:53	90.549
07/22/02	15:20:53	89.866
07/22/02	15:21:53	89.611
07/22/02	15:22:53	90.094
07/22/02	15:23:53	90.435
07/22/02	15:24:53	89.611
07/22/02	15:25:53	86.767
07/22/02	15:26:53	80.851
07/22/02	15:27:53	83.212
07/22/02	15:28:53	80.055
07/22/02	15:29:53	83.212
07/22/02	15:30:53	81.591
07/22/02	15:31:53	80.311
07/22/02	15:32:53	83.326
07/22/02	15:33:53	80.681
07/22/02	15:34:53	82.586
07/22/02	15:35:53	81.107
07/22/02	15:36:53	82.160
07/22/02	15:37:53	81.733
07/22/02	15:38:53	82.359
07/22/02	15:39:53	81.847
07/22/02	15:40:53	80.368
07/22/02	15:41:53	82.899
07/22/02	15:42:53	79.799
07/22/02	15:43:53	81.676
07/22/02	15:44:53	80.795
07/22/02	15:45:53	81.107
07/22/02	15:46:53	84.207
07/22/02	15:47:53	79.117
07/22/02	15:48:53	83.667
07/22/02	15:49:53	80.254
07/22/02	15:50:53	81.477
07/22/02	15:51:53	82.046
07/22/02	15:52:53	81.961
07/22/02	15:53:53	81.420
07/22/02	15:54:53	82.359
07/22/02	15:55:53	84.406
07/22/02	15:56:53	81.164
07/22/02	15:57:53	82.273
07/22/02	15:58:53	81.733
07/22/02	15:59:53	81.961
07/22/02	16:00:53	82.586
07/22/02	16:01:53	81.221
07/22/02	16:02:53	82.984
07/22/02	16:03:53	80.055
07/22/02	16:04:53	82.984
07/22/02	16:05:53	80.311
07/22/02	16:06:53	83.098
07/22/02	16:07:53	80.226
07/22/02	16:08:53	83.269
07/22/02	16:09:53	80.595
07/22/02	16:10:53	83.638
07/22/02	16:11:53	80.169
07/22/02	16:12:53	82.416
07/22/02	16:13:53	81.989
07/22/02	16:14:53	80.795
07/22/02	16:15:53	81.306
07/22/02	16:16:53	81.278
07/22/02	16:17:53	81.904
07/22/02	16:18:53	81.420
07/22/02	16:19:53	81.278
07/22/02	16:20:53	81.420
07/22/02	16:21:53	81.278
07/22/02	16:22:53	81.363
07/22/02	16:23:53	82.302
07/22/02	16:24:53	81.790
07/22/02	16:25:53	82.216
07/22/02	16:26:53	81.591
07/22/02	16:27:53	81.961
07/22/02	16:28:53	82.416
07/22/02	16:29:53	82.273
07/22/02	16:30:53	81.534
07/22/02	16:31:53	82.160
07/22/02	16:32:53	81.306
07/22/02	16:33:53	83.041
07/22/02	16:34:53	80.738
07/22/02	16:35:53	83.724
07/22/02	16:36:53	79.742
07/22/02	16:37:53	83.411
07/22/02	16:38:53	79.941
07/22/02	16:39:53	83.582
07/22/02	16:40:53	80.226
07/22/02	16:41:53	83.411
07/22/02	16:42:53	80.311
07/22/02	16:43:53	82.359
07/22/02	16:44:53	81.221
07/22/02	16:45:53	82.160
07/22/02	16:46:53	82.046
07/22/02	16:47:53	80.994
07/22/02	16:48:53	81.989
07/22/02	16:49:53	82.643
07/22/02	16:50:53	81.278
07/22/02	16:51:53	80.482
07/22/02	16:52:53	82.416
07/22/02	16:53:53	81.107
07/22/02	16:54:53	81.050
07/22/02	16:55:53	82.586
07/22/02	16:56:53	80.595
07/22/02	16:57:53	82.103
07/22/02	16:58:53	81.306
07/22/02	16:59:53	81.534
07/22/02	17:00:53	82.216
07/22/02	17:01:53	81.420
07/22/02	17:02:53	82.416
07/22/02	17:03:53	80.851
07/22/02	17:04:53	81.420
07/22/02	17:05:53	82.643
07/22/02	17:06:53	80.994
07/22/02	17:07:53	82.160
07/22/02	17:08:53	81.363
07/22/02	17:09:53	81.306
07/22/02	17:10:53	82.529
07/22/02	17:11:53	80.738
07/22/02	17:12:53	82.216
07/22/02	17:13:53	80.937
07/22/02	17:14:53	81.733
07/22/02	17:15:53	81.477
07/22/02	17:16:53	80.681
07/22/02	17:17:53	83.212
07/22/02	17:18:53	80.254
07/22/02	17:19:53	83.155
07/22/02	17:20:53	80.908
07/22/02	17:21:53	82.160
07/22/02	17:22:53	81.306
07/22/02	17:23:53	81.847
07/22/02	17:24:53	81.278
07/22/02	17:25:53	81.050
07/22/02	17:26:53	82.472
07/22/02	17:27:53	81.591
07/22/02	17:28:53	81.733
07/22/02	17:29:53	81.363
07/22/02	17:30:53	81.619
07/22/02	17:31:53	81.534
07/22/02	17:32:53	82.046
07/22/02	17:33:53	81.790
07/22/02	17:34:53	81.107
07/22/02	17:35:53	82.728
07/22/02	17:36:53	80.795
07/22/02	17:37:53	81.534
07/22/02	17:38:53	81.904
07/22/02	17:39:53	81.420
07/22/02	17:40:53	82.273
07/22/02	17:41:53	80.738
07/22/02	17:42:53	81.619
07/22/02	17:43:53	82.359
07/22/02	17:44:53	80.482
07/22/02	17:45:53	81.676
07/22/02	17:46:53	80.937
07/22/02	17:47:53	82.359
07/22/02	17:48:53	81.619
07/22/02	17:49:53	80.851
07/22/02	17:50:53	82.671
07/22/02	17:51:53	80.795
07/22/02	17:52:53	82.472
07/22/02	17:53:53	80.112
07/22/02	17:54:53	81.790
07/22/02	17:55:53	81.278
07/22/02	17:56:53	81.904
07/22/02	17:57:53	81.477
07/22/02	17:58:53	81.790
07/22/02	17:59:53	81.961
07/22/02	18:00:53	82.103
07/22/02	18:01:53	81.989
07/22/02	18:02:53	80.937
07/22/02	18:03:53	82.302
07/22/02	18:04:53	79.799
07/22/02	18:05:53	82.728
07/22/02	18:06:53	80.624
07/22/02	18:07:53	82.273
07/22/02	18:08:53	80.795
07/22/02	18:09:53	81.790
07/22/02	18:10:53	81.591
07/22/02	18:11:53	80.595
07/22/02	18:12:53	81.904
07/22/02	18:13:53	81.534
07/22/02	18:14:53	81.477
07/22/02	18:15:53	82.416
07/22/02	18:16:53	81.619
07/22/02	18:17:53	81.591
07/22/02	18:18:53	81.676
07/22/02	18:19:53	82.046
07/22/02	18:20:53	81.164
07/22/02	18:21:53	81.306
07/22/02	18:22:53	81.790
07/22/02	18:23:53	81.420
07/22/02	18:24:53	82.216
07/22/02	18:25:53	80.624
07/22/02	18:26:53	81.904
07/22/02	18:27:53	80.937
07/22/02	18:28:53	81.790
07/22/02	18:29:53	82.273
07/22/02	18:30:53	80.908
07/22/02	18:31:53	81.477
07/22/02	18:32:53	82.416
07/22/02	18:33:53	81.363
07/22/02	18:34:53	82.529
07/22/02	18:35:53	81.477
07/22/02	18:36:53	76.500
07/22/02	18:37:53	71.182
07/22/02	18:38:53	64.044

CARLSON CIR. - NO. 7557 cont.

Date	Time	Pres (PSI)
07/22/02	18:39:53	61.371
07/22/02	18:40:53	61.428
07/22/02	18:41:53	62.281
07/22/02	18:42:53	82.359
07/22/02	18:43:53	83.724
07/22/02	18:44:53	78.946
07/22/02	18:45:53	80.311
07/22/02	18:46:53	82.273
07/22/02	18:47:53	81.306
07/22/02	18:48:53	79.941
07/22/02	18:49:53	80.368
07/22/02	18:50:53	79.373
07/22/02	18:51:53	79.629
07/22/02	18:52:53	80.482
07/22/02	18:53:53	79.486
07/22/02	18:54:53	79.913
07/22/02	18:55:53	79.259
07/22/02	18:56:53	80.482
07/22/02	18:57:53	80.055
07/22/02	18:58:53	80.368
07/22/02	18:59:53	80.254
07/22/02	19:00:53	79.543
07/22/02	19:01:53	78.434
07/22/02	19:02:53	79.060
07/22/02	19:03:53	78.008
07/22/02	19:04:53	79.259
07/22/02	19:05:53	78.548
07/22/02	19:06:53	77.382
07/22/02	19:07:53	78.121
07/22/02	19:08:53	78.633
07/22/02	19:09:53	79.003
07/22/02	19:10:53	79.742
07/22/02	19:11:53	81.676
07/22/02	19:12:53	82.103
07/22/02	19:13:53	81.164
07/22/02	19:14:53	83.269
07/22/02	19:15:53	81.477
07/22/02	19:16:53	82.472
07/22/02	19:17:53	81.676
07/22/02	19:18:53	81.790
07/22/02	19:19:53	83.212
07/22/02	19:20:53	81.107
07/22/02	19:21:53	83.326
07/22/02	19:22:53	80.994
07/22/02	19:23:53	82.529
07/22/02	19:24:53	82.216
07/22/02	19:25:53	81.306
07/22/02	19:26:53	82.586
07/22/02	19:27:53	81.790
07/22/02	19:28:53	81.847
07/22/02	19:29:53	82.728
07/22/02	19:30:53	80.994
07/22/02	19:31:53	82.046
07/22/02	19:32:53	82.586
07/22/02	19:33:53	80.539
07/22/02	19:34:53	82.785
07/22/02	19:35:53	81.221
07/22/02	19:36:53	82.728
07/22/02	19:37:53	81.790
07/22/02	19:38:53	80.994
07/22/02	19:39:53	82.671
07/22/02	19:40:53	82.472
07/22/02	19:41:53	82.046
07/22/02	19:42:53	82.103
07/22/02	19:43:53	81.733
07/22/02	19:44:53	81.221
07/22/02	19:45:53	82.785
07/22/02	19:46:53	81.847
07/22/02	19:47:53	81.961
07/22/02	19:48:53	82.359
07/22/02	19:49:53	83.041
07/22/02	19:50:53	80.994
07/22/02	19:51:53	83.041
07/22/02	19:52:53	81.107
07/22/02	19:53:53	83.468
07/22/02	19:54:53	82.302
07/22/02	19:55:53	82.671
07/22/02	19:56:53	82.472
07/22/02	19:57:53	81.790
07/22/02	19:58:53	82.216
07/22/02	19:59:53	82.359
07/22/02	20:00:53	81.790
07/22/02	20:01:53	82.785
07/22/02	20:02:53	81.050
07/22/02	20:03:53	83.212
07/22/02	20:04:53	81.989
07/22/02	20:05:53	82.216
07/22/02	20:06:53	82.671
07/22/02	20:07:53	82.103
07/22/02	20:08:53	83.582
07/22/02	20:09:53	82.273
07/22/02	20:10:53	82.046
07/22/02	20:11:53	82.728
07/22/02	20:12:53	82.472
07/22/02	20:13:53	81.733
07/22/02	20:14:53	83.155
07/22/02	20:15:53	81.904
07/22/02	20:16:53	82.416
07/22/02	20:17:53	82.529
07/22/02	20:18:53	82.586
07/22/02	20:19:53	82.984
07/22/02	20:20:53	81.989
07/22/02	20:21:53	83.582
07/22/02	20:22:53	81.619
07/22/02	20:23:53	82.472
07/22/02	20:24:53	81.676
07/22/02	20:25:53	82.842
07/22/02	20:26:53	82.472
07/22/02	20:27:53	82.956
07/22/02	20:28:53	81.591
07/22/02	20:29:53	82.472
07/22/02	20:30:53	82.984
07/22/02	20:31:53	81.050
07/22/02	20:32:53	83.155
07/22/02	20:33:53	81.847
07/22/02	20:34:53	82.359
07/22/02	20:35:53	81.534
07/22/02	20:36:53	82.216
07/22/02	20:37:53	83.468
07/22/02	20:38:53	81.790
07/22/02	20:39:53	82.529
07/22/02	20:40:53	83.525
07/22/02	20:41:53	81.363
07/22/02	20:42:53	83.212
07/22/02	20:43:53	80.795
07/22/02	20:44:53	83.638
07/22/02	20:45:53	82.416
07/22/02	20:46:53	81.733
07/22/02	20:47:53	82.899
07/22/02	20:48:53	82.216
07/22/02	20:49:53	83.041
07/22/02	20:50:53	82.103
07/22/02	20:51:53	81.989
07/22/02	20:52:53	82.643
07/22/02	20:53:53	82.643
07/22/02	20:54:53	83.098
07/22/02	20:55:53	81.790
07/22/02	20:56:53	83.667
07/22/02	20:57:53	81.904
07/22/02	20:58:53	82.472
07/22/02	20:59:53	83.269
07/22/02	21:00:53	83.326
07/22/02	21:01:53	82.842
07/22/02	21:02:53	81.790
07/22/02	21:03:53	82.899
07/22/02	21:04:53	81.847
07/22/02	21:05:53	83.667
07/22/02	21:06:53	82.359
07/22/02	21:07:53	82.046
07/22/02	21:08:53	82.842
07/22/02	21:09:53	81.676
07/22/02	21:10:53	81.790
07/22/02	21:11:53	83.525
07/22/02	21:12:53	82.160
07/22/02	21:13:53	82.785
07/22/02	21:14:53	82.899
07/22/02	21:15:53	83.638
07/22/02	21:16:53	81.989
07/22/02	21:17:53	83.468
07/22/02	21:18:53	81.790
07/22/02	21:19:53	82.785
07/22/02	21:20:53	83.212
07/22/02	21:21:53	82.529
07/22/02	21:22:53	82.643
07/22/02	21:23:53	83.212
07/22/02	21:24:53	82.529
07/22/02	21:25:53	82.643
07/22/02	21:26:53	82.359
07/22/02	21:27:53	83.155
07/22/02	21:28:53	82.160
07/22/02	21:29:53	82.842
07/22/02	21:30:53	83.098
07/22/02	21:31:53	82.416
07/22/02	21:32:53	82.302
07/22/02	21:33:53	83.269
07/22/02	21:34:53	82.956
07/22/02	21:35:53	83.269
07/22/02	21:36:53	82.103
07/22/02	21:37:53	83.041
07/22/02	21:38:53	83.098
07/22/02	21:39:53	81.961
07/22/02	21:40:53	83.980
07/22/02	21:41:53	82.842
07/22/02	21:42:53	82.842
07/22/02	21:43:53	83.326
07/22/02	21:44:53	83.269
07/22/02	21:45:53	82.984
07/22/02	21:46:53	82.643
07/22/02	21:47:53	83.411
07/22/02	21:48:53	82.216
07/22/02	21:49:53	82.984
07/22/02	21:50:53	83.354
07/22/02	21:51:53	82.160
07/22/02	21:52:53	82.359
07/22/02	21:53:53	83.951
07/22/02	21:54:53	81.989
07/22/02	21:55:53	83.326
07/22/02	21:56:53	83.212
07/22/02	21:57:53	82.416
07/22/02	21:58:53	83.894
07/22/02	21:59:53	82.273
07/22/02	22:00:53	82.046
07/22/02	22:01:53	83.781
07/22/02	22:02:53	81.591
07/22/02	22:03:53	83.894
07/22/02	22:04:53	82.160
07/22/02	22:05:53	83.041
07/22/02	22:06:53	79.259
07/22/02	22:07:53	71.125
07/22/02	22:08:53	64.158
07/22/02	22:09:53	76.529
07/22/02	22:10:53	87.307
07/22/02	22:11:53	79.316
07/22/02	22:12:53	80.539
07/22/02	22:13:53	82.216
07/22/02	22:14:53	81.164
07/22/02	22:15:53	81.591
07/22/02	22:16:53	81.534
07/22/02	22:17:53	81.363
07/22/02	22:18:53	81.221
07/22/02	22:19:53	81.477
07/22/02	22:20:53	84.037
07/22/02	22:21:53	82.472
07/22/02	22:22:53	82.728
07/22/02	22:23:53	83.980
07/22/02	22:24:53	82.416
07/22/02	22:25:53	82.416
07/22/02	22:26:53	83.041
07/22/02	22:27:53	82.984
07/22/02	22:28:53	83.837
07/22/02	22:29:53	83.667
07/22/02	22:30:53	82.586
07/22/02	22:31:53	83.041
07/22/02	22:32:53	82.643
07/22/02	22:33:53	82.416
07/22/02	22:34:53	83.951
07/22/02	22:35:53	81.278
07/22/02	22:36:53	84.349
07/22/02	22:37:53	81.961
07/22/02	22:38:53	83.837
07/22/02	22:39:53	81.790
07/22/02	22:40:53	83.326
07/22/02	22:41:53	82.671
07/22/02	22:42:53	82.728
07/22/02	22:43:53	84.037
07/22/02	22:44:53	81.989
07/22/02	22:45:53	82.956
07/22/02	22:46:53	82.785
07/22/02	22:47:53	83.525
07/22/02	22:48:53	83.098
07/22/02	22:49:53	82.899
07/22/02	22:50:53	83.667
07/22/02	22:51:53	81.591
07/22/02	22:52:53	84.207
07/22/02	22:53:53	82.728
07/22/02	22:54:53	79.486
07/22/02	22:55:53	73.486
07/22/02	22:56:53	67.770
07/22/02	22:57:53	65.637
07/22/02	22:58:53	66.632
07/22/02	22:59:53	65.694
07/22/02	23:00:53	77.069
07/22/02	23:01:53	85.999
07/22/02	23:02:53	79.117

CARLSON CIR. - NO. 7557 cont.

Date Time	Pres (PSI)	Date Time	Pres (PSI)	Date Time	Pres (PSI)	Date Time	Pres (PSI)
07/22/02 23:03:53	80.254	07/23/02 00:09:53	82.359	07/23/02 01:15:53	84.662	07/23/02 02:21:53	82.472
07/22/02 23:04:53	82.273	07/23/02 00:10:53	82.785	07/23/02 01:16:53	83.468	07/23/02 02:22:53	82.671
07/22/02 23:05:53	82.586	07/23/02 00:11:53	83.724	07/23/02 01:17:53	81.534	07/23/02 02:23:53	82.899
07/22/02 23:06:53	81.221	07/23/02 00:12:53	82.728	07/23/02 01:18:53	83.951	07/23/02 02:24:53	83.411
07/22/02 23:07:53	81.591	07/23/02 00:13:53	82.785	07/23/02 01:19:53	82.416	07/23/02 02:25:53	83.326
07/22/02 23:08:53	81.164	07/23/02 00:14:53	83.098	07/23/02 01:20:53	82.586	07/23/02 02:26:53	83.951
07/22/02 23:09:53	81.050	07/23/02 00:15:53	83.354	07/23/02 01:21:53	84.093	07/23/02 02:27:53	82.586
07/22/02 23:10:53	82.160	07/23/02 00:16:53	83.212	07/23/02 01:22:53	83.155	07/23/02 02:28:53	82.472
07/22/02 23:11:53	81.676	07/23/02 00:17:53	82.046	07/23/02 01:23:53	82.046	07/23/02 02:29:53	83.468
07/22/02 23:12:53	81.676	07/23/02 00:18:53	84.264	07/23/02 01:24:53	82.529	07/23/02 02:30:53	83.781
07/22/02 23:13:53	82.160	07/23/02 00:19:53	81.420	07/23/02 01:25:53	83.837	07/23/02 02:31:53	82.842
07/22/02 23:14:53	81.989	07/23/02 00:20:53	83.781	07/23/02 01:26:53	82.529	07/23/02 02:32:53	82.160
07/22/02 23:15:53	81.363	07/23/02 00:21:53	81.619	07/23/02 01:27:53	82.359	07/23/02 02:33:53	82.216
07/22/02 23:16:53	81.591	07/23/02 00:22:53	83.269	07/23/02 01:28:53	83.894	07/23/02 02:34:53	82.671
07/22/02 23:17:53	81.534	07/23/02 00:23:53	83.354	07/23/02 01:29:53	83.411	07/23/02 02:35:53	82.899
07/22/02 23:18:53	82.273	07/23/02 00:24:53	82.046	07/23/02 01:30:53	82.842	07/23/02 02:36:53	83.041
07/22/02 23:19:53	82.046	07/23/02 00:25:53	83.326	07/23/02 01:31:53	82.302	07/23/02 02:37:53	82.984
07/22/02 23:20:53	81.989	07/23/02 00:26:53	83.837	07/23/02 01:32:53	82.529	07/23/02 02:38:53	83.638
07/22/02 23:21:53	81.306	07/23/02 00:27:53	81.790	07/23/02 01:33:53	83.155	07/23/02 02:39:53	83.667
07/22/02 23:22:53	81.306	07/23/02 00:28:53	83.781	07/23/02 01:34:53	82.785	07/23/02 02:40:53	82.899
07/22/02 23:23:53	81.676	07/23/02 00:29:53	82.216	07/23/02 01:35:53	83.525	07/23/02 02:41:53	82.842
07/22/02 23:24:53	82.416	07/23/02 00:30:53	82.728	07/23/02 01:36:53	83.667	07/23/02 02:42:53	82.785
07/22/02 23:25:53	81.733	07/23/02 00:31:53	83.724	07/23/02 01:37:53	82.586	07/23/02 02:43:53	82.899
07/22/02 23:26:53	81.790	07/23/02 00:32:53	82.785	07/23/02 01:38:53	82.302	07/23/02 02:44:53	82.956
07/22/02 23:27:53	81.790	07/23/02 00:33:53	82.586	07/23/02 01:39:53	83.041	07/23/02 02:45:53	82.472
07/22/02 23:28:53	81.591	07/23/02 00:34:53	83.411	07/23/02 01:40:53	83.155	07/23/02 02:46:53	82.586
07/22/02 23:29:53	81.676	07/23/02 00:35:53	82.899	07/23/02 01:41:53	82.785	07/23/02 02:47:53	83.525
07/22/02 23:30:53	82.216	07/23/02 00:36:53	82.472	07/23/02 01:42:53	82.160	07/23/02 02:48:53	83.354
07/22/02 23:31:53	82.416	07/23/02 00:37:53	83.411	07/23/02 01:43:53	83.837	07/23/02 02:49:53	82.643
07/22/02 23:32:53	81.790	07/23/02 00:38:53	82.529	07/23/02 01:44:53	83.326	07/23/02 02:50:53	82.671
07/22/02 23:33:53	81.306	07/23/02 00:39:53	83.212	07/23/02 01:45:53	82.302	07/23/02 02:51:53	82.103
07/22/02 23:34:53	81.619	07/23/02 00:40:53	83.326	07/23/02 01:46:53	82.899	07/23/02 02:52:53	82.273
07/22/02 23:35:53	82.359	07/23/02 00:41:53	82.216	07/23/02 01:47:53	84.093	07/23/02 02:53:53	82.956
07/22/02 23:36:53	81.790	07/23/02 00:42:53	83.155	07/23/02 01:48:53	83.212	07/23/02 02:54:53	82.643
07/22/02 23:37:53	84.037	07/23/02 00:43:53	82.416	07/23/02 01:49:53	82.359	07/23/02 02:55:53	82.529
07/22/02 23:38:53	82.671	07/23/02 00:44:53	83.098	07/23/02 01:50:53	83.041	07/23/02 02:56:53	82.103
07/22/02 23:39:53	83.951	07/23/02 00:45:53	82.643	07/23/02 01:51:53	83.354	07/23/02 02:57:53	81.420
07/22/02 23:40:53	81.961	07/23/02 00:46:53	82.586	07/23/02 01:52:53	82.103	07/23/02 02:58:53	81.847
07/22/02 23:41:53	83.269	07/23/02 00:47:53	82.302	07/23/02 01:53:53	82.728	07/23/02 02:59:53	81.989
07/22/02 23:42:53	83.638	07/23/02 00:48:53	83.781	07/23/02 01:54:53	83.667	07/23/02 03:00:53	82.302
07/22/02 23:43:53	82.728	07/23/02 00:49:53	82.586	07/23/02 01:55:53	83.582	07/23/02 03:01:53	82.359
07/22/02 23:44:53	82.728	07/23/02 00:50:53	83.098	07/23/02 01:56:53	83.155	07/23/02 03:02:53	82.728
07/22/02 23:45:53	83.582	07/23/02 00:51:53	83.041	07/23/02 01:57:53	83.212	07/23/02 03:03:53	82.472
07/22/02 23:46:53	82.302	07/23/02 00:52:53	82.529	07/23/02 01:58:53	82.956	07/23/02 03:04:53	82.728
07/22/02 23:47:53	83.468	07/23/02 00:53:53	82.956	07/23/02 01:59:53	82.785	07/23/02 03:05:53	83.041
07/22/02 23:48:53	82.416	07/23/02 00:54:53	83.468	07/23/02 02:00:53	82.302	07/23/02 03:06:53	82.984
07/22/02 23:49:53	83.468	07/23/02 00:55:53	82.216	07/23/02 02:01:53	82.842	07/23/02 03:07:53	82.984
07/22/02 23:50:53	82.472	07/23/02 00:56:53	83.411	07/23/02 02:02:53	82.302	07/23/02 03:08:53	82.586
07/22/02 23:51:53	82.529	07/23/02 00:57:53	82.046	07/23/02 02:03:53	82.643	07/23/02 03:09:53	82.216
07/22/02 23:52:53	83.155	07/23/02 00:58:53	83.098	07/23/02 02:04:53	83.638	07/23/02 03:10:53	82.359
07/22/02 23:53:53	83.041	07/23/02 00:59:53	83.837	07/23/02 02:05:53	84.037	07/23/02 03:11:53	83.155
07/22/02 23:54:53	82.472	07/23/02 01:00:53	81.733	07/23/02 02:06:53	82.359	07/23/02 03:12:53	82.728
07/22/02 23:55:53	82.160	07/23/02 01:01:53	83.724	07/23/02 02:07:53	81.961	07/23/02 03:13:53	82.785
07/22/02 23:56:53	83.638	07/23/02 01:02:53	82.899	07/23/02 02:08:53	83.582	07/23/02 03:14:53	82.046
07/22/02 23:57:53	82.785	07/23/02 01:03:53	82.416	07/23/02 02:09:53	83.212	07/23/02 03:15:53	82.273
07/22/02 23:58:53	82.529	07/23/02 01:04:53	83.326	07/23/02 02:10:53	82.728	07/23/02 03:16:53	82.273
07/22/02 23:59:53	83.354	07/23/02 01:05:53	82.671	07/23/02 02:11:53	83.041	07/23/02 03:17:53	82.302
07/23/02 00:00:53	82.671	07/23/02 01:06:53	82.899	07/23/02 02:12:53	83.638	07/23/02 03:18:53	82.728
07/23/02 00:01:53	83.041	07/23/02 01:07:53	82.842	07/23/02 02:13:53	83.212	07/23/02 03:19:53	82.984
07/23/02 00:02:53	84.150	07/23/02 01:08:53	83.667	07/23/02 02:14:53	82.785	07/23/02 03:20:53	82.899
07/23/02 00:03:53	82.103	07/23/02 01:09:53	82.842	07/23/02 02:15:53	82.586	07/23/02 03:21:53	82.416
07/23/02 00:04:53	83.098	07/23/02 01:10:53	82.842	07/23/02 02:16:53	82.302	07/23/02 03:22:53	82.472
07/23/02 00:05:53	83.411	07/23/02 01:11:53	82.472	07/23/02 02:17:53	83.781	07/23/02 03:23:53	82.899
07/23/02 00:06:53	83.468	07/23/02 01:12:53	82.586	07/23/02 02:18:53	83.525	07/23/02 03:24:53	82.586
07/23/02 00:07:53	82.103	07/23/02 01:13:53	75.704	07/23/02 02:19:53	83.411	07/23/02 03:25:53	83.354
07/23/02 00:08:53	84.634	07/23/02 01:14:53	77.069	07/23/02 02:20:53	83.326	07/23/02 03:26:53	83.411

CARLSON CIR. - NO. 7557 cont.

Date	Time	Pres (PSI)
07/23/02	03:27:53	82.728
07/23/02	03:28:53	83.098
07/23/02	03:29:53	82.842
07/23/02	03:30:53	83.098
07/23/02	03:31:53	83.041
07/23/02	03:32:53	83.212
07/23/02	03:33:53	82.785
07/23/02	03:34:53	82.785
07/23/02	03:35:53	82.842
07/23/02	03:36:53	82.842
07/23/02	03:37:53	82.899
07/23/02	03:38:53	83.098
07/23/02	03:39:53	82.842
07/23/02	03:40:53	83.155
07/23/02	03:41:53	82.956
07/23/02	03:42:53	82.956
07/23/02	03:43:53	83.155
07/23/02	03:44:53	83.098
07/23/02	03:45:53	83.098
07/23/02	03:46:53	83.041
07/23/02	03:47:53	82.899
07/23/02	03:48:53	82.842
07/23/02	03:49:53	83.155
07/23/02	03:50:53	82.956
07/23/02	03:51:53	83.326
07/23/02	03:52:53	82.842
07/23/02	03:53:53	82.984
07/23/02	03:54:53	82.785
07/23/02	03:55:53	82.984
07/23/02	03:56:53	82.472
07/23/02	03:57:53	83.155
07/23/02	03:58:53	82.785
07/23/02	03:59:53	82.984
07/23/02	04:00:53	82.785
07/23/02	04:01:53	82.899
07/23/02	04:02:53	83.098
07/23/02	04:03:53	82.899
07/23/02	04:04:53	82.956
07/23/02	04:05:53	82.899
07/23/02	04:06:53	82.899
07/23/02	04:07:53	82.671
07/23/02	04:08:53	82.842
07/23/02	04:09:53	82.956
07/23/02	04:10:53	82.671
07/23/02	04:11:53	83.041
07/23/02	04:12:53	82.842
07/23/02	04:13:53	82.586
07/23/02	04:14:53	83.269
07/23/02	04:15:53	82.728
07/23/02	04:16:53	82.984
07/23/02	04:17:53	82.671
07/23/02	04:18:53	83.041
07/23/02	04:19:53	82.529
07/23/02	04:20:53	82.842
07/23/02	04:21:53	82.984
07/23/02	04:22:53	82.671
07/23/02	04:23:53	83.098
07/23/02	04:24:53	82.956
07/23/02	04:25:53	83.098
07/23/02	04:26:53	83.098
07/23/02	04:27:53	82.899
07/23/02	04:28:53	83.155
07/23/02	04:29:53	82.984
07/23/02	04:30:53	82.984
07/23/02	04:31:53	82.728
07/23/02	04:32:53	83.269
07/23/02	04:33:53	83.098
07/23/02	04:34:53	82.842
07/23/02	04:35:53	83.155
07/23/02	04:36:53	83.041
07/23/02	04:37:53	82.984
07/23/02	04:38:53	83.354
07/23/02	04:39:53	82.984
07/23/02	04:40:53	83.098
07/23/02	04:41:53	82.984
07/23/02	04:42:53	82.984
07/23/02	04:43:53	82.984
07/23/02	04:44:53	82.956
07/23/02	04:45:53	83.155
07/23/02	04:46:53	82.842
07/23/02	04:47:53	83.212
07/23/02	04:48:53	82.785
07/23/02	04:49:53	82.956
07/23/02	04:50:53	82.956
07/23/02	04:51:53	83.155
07/23/02	04:52:53	83.212
07/23/02	04:53:53	82.671
07/23/02	04:54:53	82.785
07/23/02	04:55:53	82.899
07/23/02	04:56:53	82.956
07/23/02	04:57:53	83.155
07/23/02	04:58:53	82.956
07/23/02	04:59:53	79.913
07/23/02	05:00:53	75.875
07/23/02	05:01:53	77.553
07/23/02	05:02:53	79.941
07/23/02	05:03:53	78.861
07/23/02	05:04:53	78.690
07/23/02	05:05:53	79.003
07/23/02	05:06:53	78.178
07/23/02	05:07:53	77.865
07/23/02	05:08:53	77.553
07/23/02	05:09:53	76.699
07/23/02	05:10:53	76.699
07/23/02	05:11:53	76.813
07/23/02	05:12:53	76.870
07/23/02	05:13:53	76.699
07/23/02	05:14:53	76.586
07/23/02	05:15:53	76.699
07/23/02	05:16:53	78.178
07/23/02	05:17:53	78.263
07/23/02	05:18:53	78.747
07/23/02	05:19:53	78.377
07/23/02	05:20:53	79.003
07/23/02	05:21:53	78.235
07/23/02	05:22:53	78.320
07/23/02	05:23:53	77.581
07/23/02	05:24:53	77.638
07/23/02	05:25:53	77.951
07/23/02	05:26:53	78.064
07/23/02	05:27:53	77.894
07/23/02	05:28:53	76.756
07/23/02	05:29:53	76.586
07/23/02	05:30:53	76.756
07/23/02	05:31:53	76.898
07/23/02	05:32:53	76.387
07/23/02	05:33:53	76.330
07/23/02	05:34:53	76.500
07/23/02	05:35:53	76.642
07/23/02	05:36:53	76.443
07/23/02	05:37:53	76.131
07/23/02	05:38:53	76.017
07/23/02	05:39:53	75.903
07/23/02	05:40:53	75.078
07/23/02	05:41:53	75.647
07/23/02	05:42:53	74.851
07/23/02	05:43:53	74.282
07/23/02	05:44:53	74.396
07/23/02	05:45:53	74.538
07/23/02	05:46:53	74.851
07/23/02	05:47:53	74.510
07/23/02	05:48:53	73.656
07/23/02	05:49:53	72.661
07/23/02	05:50:53	83.468
07/23/02	05:51:53	90.037
07/23/02	05:52:53	86.681
07/23/02	05:53:53	81.733
07/23/02	05:54:53	83.582
07/23/02	05:55:53	83.951
07/23/02	05:56:53	83.155
07/23/02	05:57:53	83.041
07/23/02	05:58:53	82.472
07/23/02	05:59:53	82.160
07/23/02	06:00:53	84.463
07/23/02	06:01:53	82.302
07/23/02	06:02:53	82.899
07/23/02	06:03:53	82.984
07/23/02	06:04:53	82.899
07/23/02	06:05:53	83.411
07/23/02	06:06:53	82.472
07/23/02	06:07:53	82.671
07/23/02	06:08:53	83.951
07/23/02	06:09:53	82.472
07/23/02	06:10:53	83.638
07/23/02	06:11:53	82.728
07/23/02	06:12:53	83.468
07/23/02	06:13:53	83.837
07/23/02	06:14:53	82.643
07/23/02	06:15:53	82.842
07/23/02	06:16:53	83.638
07/23/02	06:17:53	83.155
07/23/02	06:18:53	83.468
07/23/02	06:19:53	81.961
07/23/02	06:20:53	84.207
07/23/02	06:21:53	82.273
07/23/02	06:22:53	84.037
07/23/02	06:23:53	83.582
07/23/02	06:24:53	82.416
07/23/02	06:25:53	79.060
07/23/02	06:26:53	73.144
07/23/02	06:27:53	68.765
07/23/02	06:28:53	90.094
07/23/02	06:29:53	87.449
07/23/02	06:30:53	80.738
07/23/02	06:31:53	82.643
07/23/02	06:32:53	83.269
07/23/02	06:33:53	82.216
07/23/02	06:34:53	82.273
07/23/02	06:35:53	83.525
07/23/02	06:36:53	82.643
07/23/02	06:37:53	82.359
07/23/02	06:38:53	83.155
07/23/02	06:39:53	82.728
07/23/02	06:40:53	81.676
07/23/02	06:41:53	81.477
07/23/02	06:42:53	81.534
07/23/02	06:43:53	83.638
07/23/02	06:44:53	82.416
07/23/02	06:45:53	81.363
07/23/02	06:46:53	83.354
07/23/02	06:47:53	81.989
07/23/02	06:48:53	82.842
07/23/02	06:49:53	82.302
07/23/02	06:50:53	82.359
07/23/02	06:51:53	82.416
07/23/02	06:52:53	82.586
07/23/02	06:53:53	81.221
07/23/02	06:54:53	82.785
07/23/02	06:55:53	82.103
07/23/02	06:56:53	82.899
07/23/02	06:57:53	82.302
07/23/02	06:58:53	82.302
07/23/02	06:59:53	82.359
07/23/02	07:00:53	82.643
07/23/02	07:01:53	81.847
07/23/02	07:02:53	81.306
07/23/02	07:03:53	81.420
07/23/02	07:04:53	82.586
07/23/02	07:05:53	82.302
07/23/02	07:06:53	81.676
07/23/02	07:07:53	82.103
07/23/02	07:08:53	80.937
07/23/02	07:09:53	74.908
07/23/02	07:10:53	83.155
07/23/02	07:11:53	88.558
07/23/02	07:12:53	80.624
07/23/02	07:13:53	81.676
07/23/02	07:14:53	82.643
07/23/02	07:15:53	74.965
07/23/02	07:16:53	81.221
07/23/02	07:17:53	79.629
07/23/02	07:18:53	79.685
07/23/02	07:19:53	79.316
07/23/02	07:20:53	87.051
07/23/02	07:21:53	79.998
07/23/02	07:22:53	80.254
07/23/02	07:23:53	83.212
07/23/02	07:24:53	82.643
07/23/02	07:25:53	82.160
07/23/02	07:26:53	81.221
07/23/02	07:27:53	80.994
07/23/02	07:28:53	81.164
07/23/02	07:29:53	81.676
07/23/02	07:30:53	83.582
07/23/02	07:31:53	79.998
07/23/02	07:32:53	80.055
07/23/02	07:33:53	81.221
07/23/02	07:34:53	82.359
07/23/02	07:35:53	83.525
07/23/02	07:36:53	83.326
07/23/02	07:37:53	82.216
07/23/02	07:38:53	81.477
07/23/02	07:39:53	81.904
07/23/02	07:40:53	83.411
07/23/02	07:41:53	83.582
07/23/02	07:42:53	83.269
07/23/02	07:43:53	83.468
07/23/02	07:44:53	79.629
07/23/02	07:45:53	85.146
07/23/02	07:46:53	79.856
07/23/02	07:47:53	84.634
07/23/02	07:48:53	88.359
07/23/02	07:49:53	81.591
07/23/02	07:50:53	84.406

CARLSON CIR. - NO. 7557 cont.

Date Time	Pres (PSI)	Date Time	Pres (PSI)	Date Time	Pres (PSI)	Date Time	Pres (PSI)
07/23/02 07:51:53	81.420	07/23/02 08:57:53	79.742	07/23/02 10:03:53	83.354	07/23/02 11:09:53	82.899
07/23/02 07:52:53	84.890	07/23/02 08:58:53	83.837	07/23/02 10:04:53	81.619	07/23/02 11:10:53	81.278
07/23/02 07:53:53	81.847	07/23/02 08:59:53	80.908	07/23/02 10:05:53	83.098	07/23/02 11:11:53	82.956
07/23/02 07:54:53	84.037	07/23/02 09:00:53	81.961	07/23/02 10:06:53	81.107	07/23/02 11:12:53	81.961
07/23/02 07:55:53	81.790	07/23/02 09:01:53	85.259	07/23/02 10:07:53	84.321	07/23/02 11:13:53	78.178
07/23/02 07:56:53	84.150	07/23/02 09:02:53	80.425	07/23/02 10:08:53	81.278	07/23/02 11:14:53	82.899
07/23/02 07:57:53	82.216	07/23/02 09:03:53	83.212	07/23/02 10:09:53	82.529	07/23/02 11:15:53	80.539
07/23/02 07:58:53	83.951	07/23/02 09:04:53	80.994	07/23/02 10:10:53	82.046	07/23/02 11:16:53	83.326
07/23/02 07:59:53	80.738	07/23/02 09:05:53	83.269	07/23/02 10:11:53	82.842	07/23/02 11:17:53	83.098
07/23/02 08:00:53	85.515	07/23/02 09:06:53	83.837	07/23/02 10:12:53	80.795	07/23/02 11:18:53	82.103
07/23/02 08:01:53	81.904	07/23/02 09:07:53	82.416	07/23/02 10:13:53	82.785	07/23/02 11:19:53	82.728
07/23/02 08:02:53	82.416	07/23/02 09:08:53	82.956	07/23/02 10:14:53	82.160	07/23/02 11:20:53	82.302
07/23/02 08:03:53	83.155	07/23/02 09:09:53	83.041	07/23/02 10:15:53	83.468	07/23/02 11:21:53	82.160
07/23/02 08:04:53	82.956	07/23/02 09:10:53	82.671	07/23/02 10:16:53	81.989	07/23/02 11:22:53	80.539
07/23/02 08:05:53	82.586	07/23/02 09:11:53	83.894	07/23/02 10:17:53	78.804	07/23/02 11:23:53	83.781
07/23/02 08:06:53	81.904	07/23/02 09:12:53	82.671	07/23/02 10:18:53	82.103	07/23/02 11:24:53	81.050
07/23/02 08:07:53	81.733	07/23/02 09:13:53	82.046	07/23/02 10:19:53	83.411	07/23/02 11:25:53	82.529
07/23/02 08:08:53	84.634	07/23/02 09:14:53	83.155	07/23/02 10:20:53	82.216	07/23/02 11:26:53	80.937
07/23/02 08:09:53	81.961	07/23/02 09:15:53	83.525	07/23/02 10:21:53	83.980	07/23/02 11:27:53	83.724
07/23/02 08:10:53	83.894	07/23/02 09:16:53	83.269	07/23/02 10:22:53	81.477	07/23/02 11:28:53	80.908
07/23/02 08:11:53	84.947	07/23/02 09:17:53	82.103	07/23/02 10:23:53	83.212	07/23/02 11:29:53	81.591
07/23/02 08:12:53	81.961	07/23/02 09:18:53	79.799	07/23/02 10:24:53	81.591	07/23/02 11:30:53	81.989
07/23/02 08:13:53	85.032	07/23/02 09:19:53	83.041	07/23/02 10:25:53	83.354	07/23/02 11:31:53	82.359
07/23/02 08:14:53	82.728	07/23/02 09:20:53	81.534	07/23/02 10:26:53	81.961	07/23/02 11:32:53	82.899
07/23/02 08:15:53	83.781	07/23/02 09:21:53	82.728	07/23/02 10:27:53	81.278	07/23/02 11:33:53	81.306
07/23/02 08:16:53	82.984	07/23/02 09:22:53	81.961	07/23/02 10:28:53	82.359	07/23/02 11:34:53	82.416
07/23/02 08:17:53	82.671	07/23/02 09:23:53	82.586	07/23/02 10:29:53	81.534	07/23/02 11:35:53	82.103
07/23/02 08:18:53	83.326	07/23/02 09:24:53	83.411	07/23/02 10:30:53	83.468	07/23/02 11:36:53	82.785
07/23/02 08:19:53	83.041	07/23/02 09:25:53	83.155	07/23/02 10:31:53	81.420	07/23/02 11:37:53	82.416
07/23/02 08:20:53	82.359	07/23/02 09:26:53	82.956	07/23/02 10:32:53	84.321	07/23/02 11:38:53	81.591
07/23/02 08:21:53	83.525	07/23/02 09:27:53	83.098	07/23/02 10:33:53	81.306	07/23/02 11:39:53	82.899
07/23/02 08:22:53	81.961	07/23/02 09:28:53	82.359	07/23/02 10:34:53	82.671	07/23/02 11:40:53	83.041
07/23/02 08:23:53	83.951	07/23/02 09:29:53	82.529	07/23/02 10:35:53	82.302	07/23/02 11:41:53	81.164
07/23/02 08:24:53	83.098	07/23/02 09:30:53	83.212	07/23/02 10:36:53	82.216	07/23/02 11:42:53	82.728
07/23/02 08:25:53	82.359	07/23/02 09:31:53	82.416	07/23/02 10:37:53	81.534	07/23/02 11:43:53	81.363
07/23/02 08:26:53	83.041	07/23/02 09:32:53	82.785	07/23/02 10:38:53	80.908	07/23/02 11:44:53	82.273
07/23/02 08:27:53	82.956	07/23/02 09:33:53	83.155	07/23/02 10:39:53	83.525	07/23/02 11:45:53	81.676
07/23/02 08:28:53	82.472	07/23/02 09:34:53	82.302	07/23/02 10:40:53	80.795	07/23/02 11:46:53	81.107
07/23/02 08:29:53	83.894	07/23/02 09:35:53	83.269	07/23/02 10:41:53	83.326	07/23/02 11:47:53	82.302
07/23/02 08:30:53	82.472	07/23/02 09:36:53	82.899	07/23/02 10:42:53	80.624	07/23/02 11:48:53	81.477
07/23/02 08:31:53	83.667	07/23/02 09:37:53	81.961	07/23/02 10:43:53	80.738	07/23/02 11:49:53	82.103
07/23/02 08:32:53	83.354	07/23/02 09:38:53	82.586	07/23/02 10:44:53	80.908	07/23/02 11:50:53	81.107
07/23/02 08:33:53	82.103	07/23/02 09:39:53	83.155	07/23/02 10:45:53	79.998	07/23/02 11:51:53	83.667
07/23/02 08:34:53	84.037	07/23/02 09:40:53	82.359	07/23/02 10:46:53	81.164	07/23/02 11:52:53	79.998
07/23/02 08:35:53	82.103	07/23/02 09:41:53	83.098	07/23/02 10:47:53	81.534	07/23/02 11:53:53	83.525
07/23/02 08:36:53	84.037	07/23/02 09:42:53	81.534	07/23/02 10:48:53	81.534	07/23/02 11:54:53	80.937
07/23/02 08:37:53	82.046	07/23/02 09:43:53	83.582	07/23/02 10:49:53	82.643	07/23/02 11:55:53	82.302
07/23/02 08:38:53	83.980	07/23/02 09:44:53	83.411	07/23/02 10:50:53	81.278	07/23/02 11:56:53	81.278
07/23/02 08:39:53	82.472	07/23/02 09:45:53	81.477	07/23/02 10:51:53	82.216	07/23/02 11:57:53	82.273
07/23/02 08:40:53	83.326	07/23/02 09:46:53	83.894	07/23/02 10:52:53	79.856	07/23/02 11:58:53	81.847
07/23/02 08:41:53	83.041	07/23/02 09:47:53	82.416	07/23/02 10:53:53	82.416	07/23/02 11:59:53	81.534
07/23/02 08:42:53	83.098	07/23/02 09:48:53	82.273	07/23/02 10:54:53	80.425	07/23/02 12:00:53	81.733
07/23/02 08:43:53	81.989	07/23/02 09:49:53	83.326	07/23/02 10:55:53	83.155	07/23/02 12:01:53	80.681
07/23/02 08:44:53	83.411	07/23/02 09:50:53	82.785	07/23/02 10:56:53	80.624	07/23/02 12:02:53	82.103
07/23/02 08:45:53	83.098	07/23/02 09:51:53	80.595	07/23/02 10:57:53	82.956	07/23/02 12:03:53	81.591
07/23/02 08:46:53	82.103	07/23/02 09:52:53	82.728	07/23/02 10:58:53	81.363	07/23/02 12:04:53	81.790
07/23/02 08:47:53	84.463	07/23/02 09:53:53	82.842	07/23/02 10:59:53	83.354	07/23/02 12:05:53	81.790
07/23/02 08:48:53	81.534	07/23/02 09:54:53	82.643	07/23/02 11:00:53	82.586	07/23/02 12:06:53	81.420
07/23/02 08:49:53	83.951	07/23/02 09:55:53	81.989	07/23/02 11:01:53	82.416	07/23/02 12:07:53	82.472
07/23/02 08:50:53	81.363	07/23/02 09:56:53	83.525	07/23/02 11:02:53	82.103	07/23/02 12:08:53	81.477
07/23/02 08:51:53	84.037	07/23/02 09:57:53	81.619	07/23/02 11:03:53	82.472	07/23/02 12:09:53	82.160
07/23/02 08:52:53	82.302	07/23/02 09:58:53	81.420	07/23/02 11:04:53	82.216	07/23/02 12:10:53	81.989
07/23/02 08:53:53	83.980	07/23/02 09:59:53	82.671	07/23/02 11:05:53	77.752	07/23/02 12:11:53	82.416
07/23/02 08:54:53	79.629	07/23/02 10:00:53	83.098	07/23/02 11:06:53	79.629	07/23/02 12:12:53	81.847
07/23/02 08:55:53	83.468	07/23/02 10:01:53	82.842	07/23/02 11:07:53	84.520	07/23/02 12:13:53	81.050
07/23/02 08:56:53	83.411	07/23/02 10:02:53	82.216	07/23/02 11:08:53	80.795	07/23/02 12:14:53	82.273

CARLSON CIR. - NO. 7557 cont.

Date	Time	Pres (PSI)
07/23/02	12:15:53	81.221
07/23/02	12:16:53	82.103
07/23/02	12:17:53	82.984
07/23/02	12:18:53	78.747
07/23/02	12:19:53	82.785
07/23/02	12:20:53	80.055
07/23/02	12:21:53	85.714
07/23/02	12:22:53	81.221
07/23/02	12:23:53	84.321
07/23/02	12:24:53	79.629
07/23/02	12:25:53	83.098
07/23/02	12:26:53	80.539
07/23/02	12:27:53	83.354
07/23/02	12:28:53	81.050
07/23/02	12:29:53	82.046
07/23/02	12:30:53	81.619
07/23/02	12:31:53	83.354
07/23/02	12:32:53	81.107
07/23/02	12:33:53	81.790
07/23/02	12:34:53	82.586
07/23/02	12:35:53	81.904
07/23/02	12:36:53	83.155
07/23/02	12:37:53	80.681
07/23/02	12:38:53	82.586
07/23/02	12:39:53	82.586
07/23/02	12:40:53	81.050
07/23/02	12:41:53	82.472
07/23/02	12:42:53	81.790
07/23/02	12:43:53	82.785
07/23/02	12:44:53	80.937
07/23/02	12:45:53	82.216
07/23/02	12:46:53	80.851
07/23/02	12:47:53	82.671
07/23/02	12:48:53	81.477
07/23/02	12:49:53	84.093
07/23/02	12:50:53	81.050
07/23/02	12:51:53	82.586
07/23/02	12:52:53	83.155
07/23/02	12:53:53	81.050
07/23/02	12:54:53	83.098
07/23/02	12:55:53	79.856
07/23/02	12:56:53	82.160
07/23/02	12:57:53	81.221
07/23/02	12:58:53	82.103
07/23/02	12:59:53	81.733
07/23/02	13:00:53	83.155
07/23/02	13:01:53	81.904
07/23/02	13:02:53	81.961
07/23/02	13:03:53	83.582
07/23/02	13:04:53	80.994
07/23/02	13:05:53	81.790
07/23/02	13:06:53	80.994
07/23/02	13:07:53	80.795
07/23/02	13:08:53	83.155
07/23/02	13:09:53	80.681
07/23/02	13:10:53	72.035
07/23/02	13:11:53	59.920
07/23/02	13:12:53	53.095
07/23/02	13:13:53	49.938
07/23/02	13:14:53	47.891
07/23/02	13:15:53	47.521
07/23/02	13:16:53	47.407
07/23/02	13:17:53	45.161
07/23/02	13:18:53	41.691
07/23/02	13:19:53	41.748
07/23/02	13:20:53	53.493
07/23/02	13:21:53	67.997
07/23/02	13:22:53	73.400
07/23/02	13:23:53	82.359
07/23/02	13:24:53	81.733
07/23/02	13:25:53	80.539
07/23/02	13:26:53	81.619
07/23/02	13:27:53	82.728
07/23/02	13:28:53	81.790
07/23/02	13:29:53	82.216
07/23/02	13:30:53	82.956
07/23/02	13:31:53	82.160
07/23/02	13:32:53	80.539
07/23/02	13:33:53	81.904
07/23/02	13:34:53	83.468
07/23/02	13:35:53	82.899
07/23/02	13:36:53	81.733
07/23/02	13:37:53	80.311
07/23/02	13:38:53	79.600
07/23/02	13:39:53	79.316
07/23/02	13:40:53	77.496
07/23/02	13:41:53	80.226
07/23/02	13:42:53	79.060
07/23/02	13:43:53	78.263
07/23/02	13:44:53	84.093
07/23/02	13:45:53	82.273
07/23/02	13:46:53	83.638
07/23/02	13:47:53	83.354
07/23/02	13:48:53	83.098
07/23/02	13:49:53	81.050
07/23/02	13:50:53	80.795
07/23/02	13:51:53	82.216
07/23/02	13:52:53	83.411
07/23/02	13:53:53	83.582
07/23/02	13:54:53	76.216
07/23/02	13:55:53	81.790
07/23/02	13:56:53	81.591
07/23/02	13:57:53	80.738
07/23/02	13:58:53	80.368
07/23/02	13:59:53	85.828
07/23/02	14:00:53	80.908
07/23/02	14:01:53	83.468
07/23/02	14:02:53	82.728
07/23/02	14:03:53	82.956
07/23/02	14:04:53	83.667
07/23/02	14:05:53	83.098
07/23/02	14:06:53	81.477
07/23/02	14:07:53	83.212
07/23/02	14:08:53	82.956
07/23/02	14:09:53	83.098
07/23/02	14:10:53	82.416
07/23/02	14:11:53	83.155
07/23/02	14:12:53	82.956
07/23/02	14:13:53	83.468
07/23/02	14:14:53	82.643
07/23/02	14:15:53	82.216
07/23/02	14:16:53	82.785
07/23/02	14:17:53	82.643
07/23/02	14:18:53	83.269
07/23/02	14:19:53	82.472
07/23/02	14:20:53	82.472
07/23/02	14:21:53	82.643
07/23/02	14:22:53	82.899
07/23/02	14:23:53	82.984
07/23/02	14:24:53	82.842
07/23/02	14:25:53	82.899
07/23/02	14:26:53	83.326
07/23/02	14:27:53	80.994
07/23/02	14:28:53	84.264
07/23/02	14:29:53	82.529
07/23/02	14:30:53	83.041
07/23/02	14:31:53	82.160
07/23/02	14:32:53	82.956
07/23/02	14:33:53	83.525
07/23/02	14:34:53	83.212
07/23/02	14:35:53	81.961
07/23/02	14:36:53	82.529
07/23/02	14:37:53	83.155
07/23/02	14:38:53	82.472
07/23/02	14:39:53	82.416
07/23/02	14:40:53	82.586
07/23/02	14:41:53	83.041
07/23/02	14:42:53	83.411
07/23/02	14:43:53	82.046
07/23/02	14:44:53	82.728
07/23/02	14:45:53	77.951
07/23/02	14:46:53	72.490
07/23/02	14:47:53	66.831
07/23/02	14:48:53	74.652
07/23/02	14:49:53	79.486
07/23/02	14:50:53	79.060
07/23/02	14:51:53	77.553
07/23/02	14:52:53	78.548
07/23/02	14:53:53	79.742
07/23/02	14:54:53	78.064
07/23/02	14:55:53	77.382
07/23/02	14:56:53	78.548
07/23/02	14:57:53	77.325
07/23/02	14:58:53	77.581
07/23/02	14:59:53	78.434
07/23/02	15:00:53	79.629
07/23/02	15:01:53	79.316
07/23/02	15:02:53	77.581
07/23/02	15:03:53	80.795
07/23/02	15:04:53	79.799
07/23/02	15:05:53	79.174
07/23/02	15:06:53	78.918
07/23/02	15:07:53	78.320
07/23/02	15:08:53	79.003
07/23/02	15:09:53	79.060
07/23/02	15:10:53	79.629
07/23/02	15:11:53	79.174
07/23/02	15:12:53	80.311
07/23/02	15:13:53	79.742
07/23/02	15:14:53	74.766
07/23/02	15:15:53	75.704
07/23/02	15:16:53	77.268
07/23/02	15:17:53	76.443
07/23/02	15:18:53	84.321
07/23/02	15:19:53	80.681
07/23/02	15:20:53	83.781
07/23/02	15:21:53	82.302
07/23/02	15:22:53	83.098
07/23/02	15:23:53	82.472
07/23/02	15:24:53	82.273
07/23/02	15:25:53	83.155
07/23/02	15:26:53	82.359
07/23/02	15:27:53	83.667
07/23/02	15:28:53	81.619
07/23/02	15:29:53	83.837
07/23/02	15:30:53	81.790
07/23/02	15:31:53	82.728
07/23/02	15:32:53	82.472
07/23/02	15:33:53	83.098
07/23/02	15:34:53	82.216
07/23/02	15:35:53	82.643
07/23/02	15:36:53	82.643
07/23/02	15:37:53	82.643
07/23/02	15:38:53	82.529
07/23/02	15:39:53	82.416
07/23/02	15:40:53	82.984
07/23/02	15:41:53	82.359
07/23/02	15:42:53	83.411
07/23/02	15:43:53	82.728
07/23/02	15:44:53	83.098
07/23/02	15:45:53	82.359
07/23/02	15:46:53	82.785
07/23/02	15:47:53	82.984
07/23/02	15:48:53	82.103
07/23/02	15:49:53	81.989
07/23/02	15:50:53	82.785
07/23/02	15:51:53	83.354
07/23/02	15:52:53	82.216
07/23/02	15:53:53	83.212
07/23/02	15:54:53	82.671
07/23/02	15:55:53	83.098
07/23/02	15:56:53	81.961
07/23/02	15:57:53	83.098
07/23/02	15:58:53	82.671
07/23/02	15:59:53	81.989
07/23/02	16:00:53	82.956
07/23/02	16:01:53	82.103
07/23/02	16:02:53	82.643
07/23/02	16:03:53	82.586
07/23/02	16:04:53	83.041
07/23/02	16:05:53	82.956
07/23/02	16:06:53	82.956
07/23/02	16:07:53	82.586
07/23/02	16:08:53	83.326
07/23/02	16:09:53	82.586
07/23/02	16:10:53	82.842
07/23/02	16:11:53	82.529
07/23/02	16:12:53	82.785
07/23/02	16:13:53	82.842
07/23/02	16:14:53	82.956
07/23/02	16:15:53	82.103
07/23/02	16:16:53	83.041
07/23/02	16:17:53	81.591
07/23/02	16:18:53	83.354
07/23/02	16:19:53	82.671
07/23/02	16:20:53	82.785
07/23/02	16:21:53	82.643
07/23/02	16:22:53	82.785
07/23/02	16:23:53	83.155
07/23/02	16:24:53	77.951
07/23/02	16:25:53	85.515
07/23/02	16:26:53	81.164
07/23/02	16:27:53	83.781
07/23/02	16:28:53	81.989
07/23/02	16:29:53	83.781
07/23/02	16:30:53	83.411
07/23/02	16:31:53	82.302
07/23/02	16:32:53	83.155
07/23/02	16:33:53	82.956
07/23/02	16:34:53	82.728
07/23/02	16:35:53	82.103
07/23/02	16:36:53	83.098
07/23/02	16:37:53	82.103
07/23/02	16:38:53	82.302

CARLSON CIR. - NO. 7557 cont.

Date	Time	Pres (PSI)
07/23/02	16:39:53	83.212
07/23/02	16:40:53	81.619
07/23/02	16:41:53	82.586
07/23/02	16:42:53	80.311
07/23/02	16:43:53	69.874
07/23/02	16:44:53	61.229
07/23/02	16:45:53	58.868
07/23/02	16:46:53	59.238
07/23/02	16:47:53	58.868
07/23/02	16:48:53	83.724
07/23/02	16:49:53	83.468
07/23/02	16:50:53	81.278
07/23/02	16:51:53	79.799
07/23/02	16:52:53	78.576
07/23/02	16:53:53	80.738
07/23/02	16:54:53	79.998
07/23/02	16:55:53	79.629
07/23/02	16:56:53	78.377
07/23/02	16:57:53	78.946
07/23/02	16:58:53	79.003
07/23/02	16:59:53	79.799
07/23/02	17:00:53	79.230
07/23/02	17:01:53	79.543
07/23/02	17:02:53	78.235
07/23/02	17:03:53	78.804
07/23/02	17:04:53	79.856
07/23/02	17:05:53	78.946
07/23/02	17:06:53	79.429
07/23/02	17:07:53	79.003
07/23/02	17:08:53	79.117
07/23/02	17:09:53	85.146
07/23/02	17:10:53	83.155
07/23/02	17:11:53	82.586
07/23/02	17:12:53	84.520
07/23/02	17:13:53	82.586
07/23/02	17:14:53	82.472
07/23/02	17:15:53	83.041
07/23/02	17:16:53	82.216
07/23/02	17:17:53	83.155
07/23/02	17:18:53	82.302
07/23/02	17:19:53	82.728
07/23/02	17:20:53	82.359
07/23/02	17:21:53	83.155
07/23/02	17:22:53	82.160
07/23/02	17:23:53	82.842
07/23/02	17:24:53	81.989
07/23/02	17:25:53	82.785
07/23/02	17:26:53	82.899
07/23/02	17:27:53	82.643
07/23/02	17:28:53	82.728
07/23/02	17:29:53	82.671
07/23/02	17:30:53	82.956
07/23/02	17:31:53	82.899
07/23/02	17:32:53	82.302
07/23/02	17:33:53	83.212
07/23/02	17:34:53	82.899
07/23/02	17:35:53	82.785
07/23/02	17:36:53	81.363
07/23/02	17:37:53	83.155
07/23/02	17:38:53	82.529
07/23/02	17:39:53	82.529
07/23/02	17:40:53	82.416
07/23/02	17:41:53	81.989
07/23/02	17:42:53	83.326
07/23/02	17:43:53	82.728
07/23/02	17:44:53	81.961
07/23/02	17:45:53	81.989
07/23/02	17:46:53	82.984
07/23/02	17:47:53	82.472
07/23/02	17:48:53	82.671
07/23/02	17:49:53	83.582
07/23/02	17:50:53	82.785
07/23/02	17:51:53	82.728
07/23/02	17:52:53	82.160
07/23/02	17:53:53	82.046
07/23/02	17:54:53	82.586
07/23/02	17:55:53	82.643
07/23/02	17:56:53	82.416
07/23/02	17:57:53	83.468
07/23/02	17:58:53	82.899
07/23/02	17:59:53	83.098
07/23/02	18:00:53	82.216
07/23/02	18:01:53	82.359
07/23/02	18:02:53	82.671
07/23/02	18:03:53	82.728
07/23/02	18:04:53	82.956
07/23/02	18:05:53	82.586
07/23/02	18:06:53	82.273
07/23/02	18:07:53	82.472
07/23/02	18:08:53	82.728
07/23/02	18:09:53	82.586
07/23/02	18:10:53	82.302
07/23/02	18:11:53	82.956
07/23/02	18:12:53	82.529
07/23/02	18:13:53	82.956
07/23/02	18:14:53	81.420
07/23/02	18:15:53	83.098
07/23/02	18:16:53	82.359
07/23/02	18:17:53	82.671
07/23/02	18:18:53	82.160
07/23/02	18:19:53	82.103
07/23/02	18:20:53	82.956
07/23/02	18:21:53	82.785
07/23/02	18:22:53	82.529
07/23/02	18:23:53	82.728
07/23/02	18:24:53	82.160
07/23/02	18:25:53	83.155
07/23/02	18:26:53	82.643
07/23/02	18:27:53	81.790
07/23/02	18:28:53	83.041
07/23/02	18:29:53	81.790
07/23/02	18:30:53	82.956
07/23/02	18:31:53	82.103
07/23/02	18:32:53	82.302
07/23/02	18:33:53	83.155
07/23/02	18:34:53	82.529
07/23/02	18:35:53	82.785
07/23/02	18:36:53	81.904
07/23/02	18:37:53	82.273
07/23/02	18:38:53	82.785
07/23/02	18:39:53	82.216
07/23/02	18:40:53	83.582
07/23/02	18:41:53	82.216
07/23/02	18:42:53	82.643
07/23/02	18:43:53	82.302
07/23/02	18:44:53	82.529
07/23/02	18:45:53	82.984
07/23/02	18:46:53	81.904
07/23/02	18:47:53	83.269
07/23/02	18:48:53	82.103
07/23/02	18:49:53	82.899
07/23/02	18:50:53	82.643
07/23/02	18:51:53	82.899
07/23/02	18:52:53	82.586
07/23/02	18:53:53	82.586
07/23/02	18:54:53	82.216
07/23/02	18:55:53	82.529
07/23/02	18:56:53	82.586
07/23/02	18:57:53	82.359
07/23/02	18:58:53	82.273
07/23/02	18:59:53	82.643
07/23/02	19:00:53	82.956
07/23/02	19:01:53	82.728
07/23/02	19:02:53	82.216
07/23/02	19:03:53	82.416
07/23/02	19:04:53	83.269
07/23/02	19:05:53	82.472
07/23/02	19:06:53	83.354
07/23/02	19:07:53	81.676
07/23/02	19:08:53	83.411
07/23/02	19:09:53	81.961
07/23/02	19:10:53	82.899
07/23/02	19:11:53	82.785
07/23/02	19:12:53	82.643
07/23/02	19:13:53	82.046
07/23/02	19:14:53	82.359
07/23/02	19:15:53	82.103
07/23/02	19:16:53	82.643
07/23/02	19:17:53	83.354
07/23/02	19:18:53	81.733
07/23/02	19:19:53	82.216
07/23/02	19:20:53	83.041
07/23/02	19:21:53	82.671
07/23/02	19:22:53	82.416
07/23/02	19:23:53	83.724
07/23/02	19:24:53	82.984
07/23/02	19:25:53	83.269
07/23/02	19:26:53	82.785
07/23/02	19:27:53	82.842
07/23/02	19:28:53	83.212
07/23/02	19:29:53	82.984
07/23/02	19:30:53	83.354
07/23/02	19:31:53	82.842
07/23/02	19:32:53	82.273
07/23/02	19:33:53	82.899
07/23/02	19:34:53	83.326
07/23/02	19:35:53	82.643
07/23/02	19:36:53	82.842
07/23/02	19:37:53	82.984
07/23/02	19:38:53	82.785
07/23/02	19:39:53	83.667
07/23/02	19:40:53	82.728
07/23/02	19:41:53	83.638
07/23/02	19:42:53	82.216
07/23/02	19:43:53	83.525
07/23/02	19:44:53	81.619
07/23/02	19:45:53	81.989
07/23/02	19:46:53	83.326
07/23/02	19:47:53	82.103
07/23/02	19:48:53	82.046
07/23/02	19:49:53	83.155
07/23/02	19:50:53	82.671
07/23/02	19:51:53	82.216
07/23/02	19:52:53	84.776
07/23/02	19:53:53	82.160
07/23/02	19:54:53	83.638
07/23/02	19:55:53	82.643
07/23/02	19:56:53	83.098
07/23/02	19:57:53	82.956
07/23/02	19:58:53	83.468
07/23/02	19:59:53	83.354
07/23/02	20:00:53	82.472
07/23/02	20:01:53	83.525
07/23/02	20:02:53	82.785
07/23/02	20:03:53	83.326
07/23/02	20:04:53	82.899
07/23/02	20:05:53	83.468
07/23/02	20:06:53	82.416
07/23/02	20:07:53	82.984
07/23/02	20:08:53	83.468
07/23/02	20:09:53	83.582
07/23/02	20:10:53	82.956
07/23/02	20:11:53	82.728
07/23/02	20:12:53	83.667
07/23/02	20:13:53	83.041
07/23/02	20:14:53	83.041
07/23/02	20:15:53	83.525
07/23/02	20:16:53	82.728
07/23/02	20:17:53	83.212
07/23/02	20:18:53	83.354
07/23/02	20:19:53	82.728
07/23/02	20:20:53	82.302
07/23/02	20:21:53	82.956
07/23/02	20:22:53	83.326
07/23/02	20:23:53	82.529
07/23/02	20:24:53	83.155
07/23/02	20:25:53	83.468
07/23/02	20:26:53	83.354
07/23/02	20:27:53	82.728
07/23/02	20:28:53	83.582
07/23/02	20:29:53	83.041
07/23/02	20:30:53	82.785
07/23/02	20:31:53	82.956
07/23/02	20:32:53	83.638
07/23/02	20:33:53	82.728
07/23/02	20:34:53	83.354
07/23/02	20:35:53	82.671
07/23/02	20:36:53	82.529
07/23/02	20:37:53	83.269
07/23/02	20:38:53	83.837
07/23/02	20:39:53	82.728
07/23/02	20:40:53	83.724
07/23/02	20:41:53	82.046
07/23/02	20:42:53	83.951
07/23/02	20:43:53	83.098
07/23/02	20:44:53	83.098
07/23/02	20:45:53	83.724
07/23/02	20:46:53	82.842
07/23/02	20:47:53	84.150
07/23/02	20:48:53	82.956
07/23/02	20:49:53	83.354
07/23/02	20:50:53	82.956
07/23/02	20:51:53	84.264
07/23/02	20:52:53	83.269
07/23/02	20:53:53	83.411
07/23/02	20:54:53	83.980
07/23/02	20:55:53	82.956
07/23/02	20:56:53	82.671
07/23/02	20:57:53	83.269
07/23/02	20:58:53	82.899
07/23/02	20:59:53	83.951
07/23/02	21:00:53	82.359
07/23/02	21:01:53	83.354
07/23/02	21:02:53	82.586

CARLSON CIR. - NO. 7557 cont.

Date	Time	Pres (PSI)
07/23/02	21:03:53	83.468
07/23/02	21:04:53	83.980
07/23/02	21:05:53	82.359
07/23/02	21:06:53	83.525
07/23/02	21:07:53	82.899
07/23/02	21:08:53	82.899
07/23/02	21:09:53	83.525
07/23/02	21:10:53	82.785
07/23/02	21:11:53	83.894
07/23/02	21:12:53	83.326
07/23/02	21:13:53	83.951
07/23/02	21:14:53	82.984
07/23/02	21:15:53	83.212
07/23/02	21:16:53	83.582
07/23/02	21:17:53	83.098
07/23/02	21:18:53	83.468
07/23/02	21:19:53	83.582
07/23/02	21:20:53	83.411
07/23/02	21:21:53	83.098
07/23/02	21:22:53	83.155
07/23/02	21:23:53	83.468
07/23/02	21:24:53	83.326
07/23/02	21:25:53	82.785
07/23/02	21:26:53	83.354
07/23/02	21:27:53	82.956
07/23/02	21:28:53	83.326
07/23/02	21:29:53	83.411
07/23/02	21:30:53	82.956
07/23/02	21:31:53	83.781
07/23/02	21:32:53	83.041
07/23/02	21:33:53	83.411
07/23/02	21:34:53	83.582
07/23/02	21:35:53	83.525
07/23/02	21:36:53	84.207
07/23/02	21:37:53	83.326
07/23/02	21:38:53	84.093
07/23/02	21:39:53	83.155
07/23/02	21:40:53	84.321
07/23/02	21:41:53	83.638
07/23/02	21:42:53	83.894
07/23/02	21:43:53	83.951
07/23/02	21:44:53	83.326
07/23/02	21:45:53	83.837
07/23/02	21:46:53	82.359
07/23/02	21:47:53	80.368
07/23/02	21:48:53	73.486
07/23/02	21:49:53	67.741
07/23/02	21:50:53	61.286
07/23/02	21:51:53	56.508
07/23/02	21:52:53	55.143
07/23/02	21:53:53	55.882
07/23/02	21:54:53	54.403
07/23/02	21:55:53	55.143
07/23/02	21:56:53	55.342
07/23/02	21:57:53	55.342
07/23/02	21:58:53	68.992
07/23/02	21:59:53	81.363
07/23/02	22:00:53	77.752
07/23/02	22:01:53	78.064
07/23/02	22:02:53	77.439
07/23/02	22:03:53	77.638
07/23/02	22:04:53	77.211
07/23/02	22:05:53	77.439
07/23/02	22:06:53	77.382
07/23/02	22:07:53	77.951
07/23/02	22:08:53	77.581
07/23/02	22:09:53	78.690
07/23/02	22:10:53	78.008
07/23/02	22:11:53	78.633
07/23/02	22:12:53	78.235
07/23/02	22:13:53	77.069
07/23/02	22:14:53	77.808
07/23/02	22:15:53	77.638
07/23/02	22:16:53	77.752
07/23/02	22:17:53	78.804
07/23/02	22:18:53	77.808
07/23/02	22:19:53	78.235
07/23/02	22:20:53	87.079
07/23/02	22:21:53	82.529
07/23/02	22:22:53	84.662
07/23/02	22:23:53	83.638
07/23/02	22:24:53	84.207
07/23/02	22:25:53	83.951
07/23/02	22:26:53	83.269
07/23/02	22:27:53	84.207
07/23/02	22:28:53	83.837
07/23/02	22:29:53	84.207
07/23/02	22:30:53	82.984
07/23/02	22:31:53	84.406
07/23/02	22:32:53	83.837
07/23/02	22:33:53	84.093
07/23/02	22:34:53	83.724
07/23/02	22:35:53	84.577
07/23/02	22:36:53	84.037
07/23/02	22:37:53	84.037
07/23/02	22:38:53	83.894
07/23/02	22:39:53	83.894
07/23/02	22:40:53	83.582
07/23/02	22:41:53	84.577
07/23/02	22:42:53	83.269
07/23/02	22:43:53	84.463
07/23/02	22:44:53	83.411
07/23/02	22:45:53	83.781
07/23/02	22:46:53	84.406
07/23/02	22:47:53	83.638
07/23/02	22:48:53	84.406
07/23/02	22:49:53	83.951
07/23/02	22:50:53	83.980
07/23/02	22:51:53	83.781
07/23/02	22:52:53	84.463
07/23/02	22:53:53	83.326
07/23/02	22:54:53	84.093
07/23/02	22:55:53	84.150
07/23/02	22:56:53	84.662
07/23/02	22:57:53	83.354
07/23/02	22:58:53	83.667
07/23/02	22:59:53	83.951
07/23/02	23:00:53	84.349
07/23/02	23:01:53	82.899
07/23/02	23:02:53	84.037
07/23/02	23:03:53	84.093
07/23/02	23:04:53	84.207
07/23/02	23:05:53	84.150
07/23/02	23:06:53	83.582
07/23/02	23:07:53	83.894
07/23/02	23:08:53	83.980
07/23/02	23:09:53	83.667
07/23/02	23:10:53	83.837
07/23/02	23:11:53	84.577
07/23/02	23:12:53	83.837
07/23/02	23:13:53	84.037
07/23/02	23:14:53	83.326
07/23/02	23:15:53	84.833
07/23/02	23:16:53	83.468
07/23/02	23:17:53	84.207
07/23/02	23:18:53	83.468
07/23/02	23:19:53	84.037
07/23/02	23:20:53	83.638
07/23/02	23:21:53	83.951
07/23/02	23:22:53	84.463
07/23/02	23:23:53	84.093
07/23/02	23:24:53	83.837
07/23/02	23:25:53	83.781
07/23/02	23:26:53	83.582
07/23/02	23:27:53	83.951
07/23/02	23:28:53	83.980
07/23/02	23:29:53	83.326
07/23/02	23:30:53	84.463
07/23/02	23:31:53	83.781
07/23/02	23:32:53	84.207
07/23/02	23:33:53	83.525
07/23/02	23:34:53	83.894
07/23/02	23:35:53	83.894
07/23/02	23:36:53	84.406
07/23/02	23:37:53	83.525
07/23/02	23:38:53	83.724
07/23/02	23:39:53	84.207
07/23/02	23:40:53	83.837
07/23/02	23:41:53	84.150
07/23/02	23:42:53	83.468
07/23/02	23:43:53	84.349
07/23/02	23:44:53	83.525
07/23/02	23:45:53	84.207
07/23/02	23:46:53	83.525
07/23/02	23:47:53	83.837
07/23/02	23:48:53	83.951
07/23/02	23:49:53	84.093
07/23/02	23:50:53	84.093
07/23/02	23:51:53	83.468
07/23/02	23:52:53	84.150
07/23/02	23:53:53	83.468
07/23/02	23:54:53	84.207
07/23/02	23:55:53	83.951
07/23/02	23:56:53	83.894
07/23/02	23:57:53	83.582
07/23/02	23:58:53	83.724
07/23/02	23:59:53	83.582
07/24/02	00:00:53	83.667
07/24/02	00:01:53	84.150
07/24/02	00:02:53	84.207
07/24/02	00:03:53	83.638
07/24/02	00:04:53	83.951
07/24/02	00:05:53	83.781
07/24/02	00:06:53	83.582
07/24/02	00:07:53	83.894
07/24/02	00:08:53	84.150
07/24/02	00:09:53	83.951
07/24/02	00:10:53	83.667
07/24/02	00:11:53	83.837
07/24/02	00:12:53	84.093
07/24/02	00:13:53	83.980
07/24/02	00:14:53	83.951
07/24/02	00:15:53	84.093
07/24/02	00:16:53	83.155
07/24/02	00:17:53	83.837
07/24/02	00:18:53	83.326
07/24/02	00:19:53	83.525
07/24/02	00:20:53	83.638
07/24/02	00:21:53	83.525
07/24/02	00:22:53	83.638
07/24/02	00:23:53	83.638
07/24/02	00:24:53	83.894
07/24/02	00:25:53	83.354
07/24/02	00:26:53	83.667
07/24/02	00:27:53	83.326
07/24/02	00:28:53	84.207
07/24/02	00:29:53	80.595
07/24/02	00:30:53	84.947
07/24/02	00:31:53	83.155
07/24/02	00:32:53	83.155
07/24/02	00:33:53	83.667
07/24/02	00:34:53	83.724
07/24/02	00:35:53	82.984
07/24/02	00:36:53	83.582
07/24/02	00:37:53	83.354
07/24/02	00:38:53	83.667
07/24/02	00:39:53	82.785
07/24/02	00:40:53	83.724
07/24/02	00:41:53	83.354
07/24/02	00:42:53	83.951
07/24/02	00:43:53	83.212
07/24/02	00:44:53	83.638
07/24/02	00:45:53	83.638
07/24/02	00:46:53	83.354
07/24/02	00:47:53	83.638
07/24/02	00:48:53	83.212
07/24/02	00:49:53	83.667
07/24/02	00:50:53	83.525
07/24/02	00:51:53	82.671
07/24/02	00:52:53	83.724
07/24/02	00:53:53	83.468
07/24/02	00:54:53	83.638
07/24/02	00:55:53	83.354
07/24/02	00:56:53	83.837
07/24/02	00:57:53	83.269
07/24/02	00:58:53	83.724
07/24/02	00:59:53	83.667
07/24/02	01:00:53	83.326
07/24/02	01:01:53	83.837
07/24/02	01:02:53	83.098
07/24/02	01:03:53	84.093
07/24/02	01:04:53	83.041
07/24/02	01:05:53	84.093
07/24/02	01:06:53	83.269
07/24/02	01:07:53	83.837
07/24/02	01:08:53	83.525
07/24/02	01:09:53	83.667
07/24/02	01:10:53	83.638
07/24/02	01:11:53	83.269
07/24/02	01:12:53	83.951
07/24/02	01:13:53	82.956
07/24/02	01:14:53	84.093
07/24/02	01:15:53	77.183
07/24/02	01:16:53	67.741
07/24/02	01:17:53	69.618
07/24/02	01:18:53	91.089
07/24/02	01:19:53	80.169
07/24/02	01:20:53	82.899
07/24/02	01:21:53	84.207
07/24/02	01:22:53	80.937
07/24/02	01:23:53	83.326
07/24/02	01:24:53	83.837
07/24/02	01:25:53	82.586
07/24/02	01:26:53	82.728

CARLSON CIR. - NO. 7557 cont.

Date Time	Pres (PSI)	Date Time	Pres (PSI)	Date Time	Pres (PSI)	Date Time	Pres (PSI)
07/24/02 01:27:53	82.842	07/24/02 02:33:53	83.525	07/24/02 03:39:53	83.269	07/24/02 04:45:53	82.472
07/24/02 01:28:53	83.781	07/24/02 02:34:53	83.468	07/24/02 03:40:53	83.582	07/24/02 04:46:53	82.359
07/24/02 01:29:53	83.269	07/24/02 02:35:53	83.212	07/24/02 03:41:53	83.354	07/24/02 04:47:53	82.216
07/24/02 01:30:53	82.728	07/24/02 02:36:53	82.984	07/24/02 03:42:53	83.638	07/24/02 04:48:53	82.216
07/24/02 01:31:53	82.586	07/24/02 02:37:53	82.671	07/24/02 03:43:53	83.894	07/24/02 04:49:53	82.359
07/24/02 01:32:53	82.359	07/24/02 02:38:53	82.899	07/24/02 03:44:53	83.411	07/24/02 04:50:53	82.785
07/24/02 01:33:53	83.098	07/24/02 02:39:53	83.155	07/24/02 03:45:53	83.638	07/24/02 04:51:53	82.671
07/24/02 01:34:53	83.525	07/24/02 02:40:53	82.416	07/24/02 03:46:53	83.269	07/24/02 04:52:53	82.416
07/24/02 01:35:53	83.098	07/24/02 02:41:53	82.529	07/24/02 03:47:53	83.098	07/24/02 04:53:53	81.989
07/24/02 01:36:53	82.956	07/24/02 02:42:53	83.326	07/24/02 03:48:53	83.837	07/24/02 04:54:53	82.160
07/24/02 01:37:53	83.098	07/24/02 02:43:53	82.956	07/24/02 03:49:53	83.212	07/24/02 04:55:53	82.472
07/24/02 01:38:53	82.472	07/24/02 02:44:53	82.728	07/24/02 03:50:53	83.837	07/24/02 04:56:53	82.643
07/24/02 01:39:53	83.098	07/24/02 02:45:53	82.586	07/24/02 03:51:53	83.269	07/24/02 04:57:53	82.416
07/24/02 01:40:53	83.269	07/24/02 02:46:53	82.956	07/24/02 03:52:53	84.349	07/24/02 04:58:53	82.160
07/24/02 01:41:53	83.041	07/24/02 02:47:53	83.212	07/24/02 03:53:53	82.643	07/24/02 04:59:53	81.961
07/24/02 01:42:53	83.098	07/24/02 02:48:53	82.984	07/24/02 03:54:53	84.321	07/24/02 05:00:53	81.733
07/24/02 01:43:53	82.785	07/24/02 02:49:53	82.785	07/24/02 03:55:53	79.060	07/24/02 05:01:53	80.624
07/24/02 01:44:53	82.899	07/24/02 02:50:53	82.728	07/24/02 03:56:53	68.139	07/24/02 05:02:53	80.738
07/24/02 01:45:53	82.643	07/24/02 02:51:53	82.586	07/24/02 03:57:53	73.031	07/24/02 05:03:53	80.738
07/24/02 01:46:53	82.785	07/24/02 02:52:53	83.155	07/24/02 03:58:53	87.876	07/24/02 05:04:53	80.624
07/24/02 01:47:53	82.416	07/24/02 02:53:53	82.643	07/24/02 03:59:53	80.595	07/24/02 05:05:53	80.595
07/24/02 01:48:53	82.472	07/24/02 02:54:53	82.416	07/24/02 04:00:53	82.842	07/24/02 05:06:53	80.851
07/24/02 01:49:53	82.842	07/24/02 02:55:53	82.643	07/24/02 04:01:53	84.463	07/24/02 05:07:53	80.624
07/24/02 01:50:53	82.984	07/24/02 02:56:53	84.037	07/24/02 04:02:53	82.046	07/24/02 05:08:53	81.164
07/24/02 01:51:53	81.904	07/24/02 02:57:53	83.837	07/24/02 04:03:53	82.529	07/24/02 05:09:53	82.956
07/24/02 01:52:53	83.098	07/24/02 02:58:53	80.738	07/24/02 04:04:53	83.269	07/24/02 05:10:53	85.203
07/24/02 01:53:53	82.956	07/24/02 02:59:53	84.634	07/24/02 04:05:53	82.643	07/24/02 05:11:53	82.216
07/24/02 01:54:53	83.098	07/24/02 03:00:53	83.212	07/24/02 04:06:53	82.472	07/24/02 05:12:53	82.359
07/24/02 01:55:53	82.899	07/24/02 03:01:53	83.468	07/24/02 04:07:53	82.273	07/24/02 05:13:53	83.326
07/24/02 01:56:53	82.728	07/24/02 03:02:53	83.411	07/24/02 04:08:53	82.586	07/24/02 05:14:53	82.956
07/24/02 01:57:53	82.671	07/24/02 03:03:53	83.781	07/24/02 04:09:53	82.984	07/24/02 05:15:53	82.643
07/24/02 01:58:53	82.785	07/24/02 03:04:53	83.326	07/24/02 04:10:53	82.785	07/24/02 05:16:53	83.155
07/24/02 01:59:53	82.103	07/24/02 03:05:53	83.724	07/24/02 04:11:53	82.586	07/24/02 05:17:53	82.728
07/24/02 02:00:53	82.671	07/24/02 03:06:53	83.212	07/24/02 04:12:53	82.586	07/24/02 05:18:53	84.093
07/24/02 02:01:53	84.776	07/24/02 03:07:53	83.724	07/24/02 04:13:53	82.956	07/24/02 05:19:53	84.662
07/24/02 02:02:53	82.956	07/24/02 03:08:53	83.525	07/24/02 04:14:53	83.098	07/24/02 05:20:53	84.150
07/24/02 02:03:53	83.269	07/24/02 03:09:53	83.354	07/24/02 04:15:53	82.899	07/24/02 05:21:53	83.667
07/24/02 02:04:53	83.638	07/24/02 03:10:53	83.667	07/24/02 04:16:53	82.216	07/24/02 05:22:53	84.406
07/24/02 02:05:53	83.582	07/24/02 03:11:53	83.411	07/24/02 04:17:53	82.643	07/24/02 05:23:53	83.582
07/24/02 02:06:53	82.842	07/24/02 03:12:53	83.638	07/24/02 04:18:53	82.899	07/24/02 05:24:53	84.577
07/24/02 02:07:53	84.093	07/24/02 03:13:53	83.525	07/24/02 04:19:53	82.529	07/24/02 05:25:53	83.582
07/24/02 02:08:53	83.155	07/24/02 03:14:53	83.212	07/24/02 04:20:53	82.472	07/24/02 05:26:53	84.406
07/24/02 02:09:53	83.468	07/24/02 03:15:53	83.837	07/24/02 04:21:53	82.273	07/24/02 05:27:53	83.837
07/24/02 02:10:53	83.525	07/24/02 03:16:53	83.354	07/24/02 04:22:53	82.728	07/24/02 05:28:53	83.894
07/24/02 02:11:53	83.326	07/24/02 03:17:53	83.724	07/24/02 04:23:53	83.098	07/24/02 05:29:53	83.837
07/24/02 02:12:53	83.638	07/24/02 03:18:53	83.582	07/24/02 04:24:53	82.160	07/24/02 05:30:53	83.951
07/24/02 02:13:53	83.411	07/24/02 03:19:53	83.354	07/24/02 04:25:53	82.984	07/24/02 05:31:53	83.582
07/24/02 02:14:53	83.354	07/24/02 03:20:53	83.724	07/24/02 04:26:53	82.956	07/24/02 05:32:53	83.951
07/24/02 02:15:53	83.667	07/24/02 03:21:53	83.212	07/24/02 04:27:53	82.728	07/24/02 05:33:53	83.980
07/24/02 02:16:53	69.874	07/24/02 03:22:53	83.667	07/24/02 04:28:53	82.359	07/24/02 05:34:53	84.093
07/24/02 02:17:53	67.258	07/24/02 03:23:53	83.468	07/24/02 04:29:53	82.273	07/24/02 05:35:53	84.321
07/24/02 02:18:53	72.234	07/24/02 03:24:53	83.354	07/24/02 04:30:53	82.302	07/24/02 05:36:53	83.837
07/24/02 02:19:53	72.490	07/24/02 03:25:53	83.894	07/24/02 04:31:53	82.671	07/24/02 05:37:53	83.980
07/24/02 02:20:53	72.149	07/24/02 03:26:53	83.212	07/24/02 04:32:53	82.472	07/24/02 05:38:53	83.667
07/24/02 02:21:53	72.490	07/24/02 03:27:53	83.781	07/24/02 04:33:53	82.216	07/24/02 05:39:53	84.150
07/24/02 02:22:53	73.088	07/24/02 03:28:53	82.956	07/24/02 04:34:53	82.472	07/24/02 05:40:53	83.781
07/24/02 02:23:53	72.860	07/24/02 03:29:53	83.980	07/24/02 04:35:53	82.984	07/24/02 05:41:53	84.037
07/24/02 02:24:53	73.031	07/24/02 03:30:53	83.269	07/24/02 04:36:53	82.785	07/24/02 05:42:53	84.207
07/24/02 02:25:53	72.604	07/24/02 03:31:53	83.582	07/24/02 04:37:53	82.359	07/24/02 05:43:53	83.582
07/24/02 02:26:53	72.604	07/24/02 03:32:53	83.468	07/24/02 04:38:53	82.643	07/24/02 05:44:53	83.894
07/24/02 02:27:53	87.449	07/24/02 03:33:53	83.582	07/24/02 04:39:53	82.643	07/24/02 05:45:53	83.980
07/24/02 02:28:53	82.643	07/24/02 03:34:53	83.411	07/24/02 04:40:53	82.643	07/24/02 05:46:53	83.837
07/24/02 02:29:53	80.795	07/24/02 03:35:53	83.354	07/24/02 04:41:53	82.785	07/24/02 05:47:53	84.321
07/24/02 02:30:53	84.463	07/24/02 03:36:53	83.525	07/24/02 04:42:53	82.302	07/24/02 05:48:53	82.899
07/24/02 02:31:53	82.416	07/24/02 03:37:53	83.411	07/24/02 04:43:53	82.643	07/24/02 05:49:53	84.520
07/24/02 02:32:53	82.671	07/24/02 03:38:53	83.411	07/24/02 04:44:53	82.728	07/24/02 05:50:53	83.582

CARLSON CIR. - NO. 7557 cont.

Date Time	Pres (PSI)	Date Time	Pres (PSI)	Date Time	Pres (PSI)	Date Time	Pres (PSI)
07/24/02 05:51:53	84.264	07/24/02 06:57:53	84.833	07/24/02 08:03:53	82.984	07/24/02 09:09:53	82.671
07/24/02 05:52:53	84.037	07/24/02 06:58:53	80.624	07/24/02 08:04:53	82.359	07/24/02 09:10:53	84.463
07/24/02 05:53:53	83.724	07/24/02 06:59:53	84.890	07/24/02 08:05:53	84.662	07/24/02 09:11:53	83.894
07/24/02 05:54:53	84.037	07/24/02 07:00:53	84.037	07/24/02 08:06:53	83.326	07/24/02 09:12:53	84.463
07/24/02 05:55:53	84.037	07/24/02 07:01:53	83.724	07/24/02 08:07:53	83.468	07/24/02 09:13:53	83.212
07/24/02 05:56:53	83.582	07/24/02 07:02:53	85.146	07/24/02 08:08:53	84.037	07/24/02 09:14:53	83.212
07/24/02 05:57:53	84.207	07/24/02 07:03:53	84.207	07/24/02 08:09:53	82.956	07/24/02 09:15:53	81.989
07/24/02 05:58:53	83.894	07/24/02 07:04:53	84.207	07/24/02 08:10:53	83.951	07/24/02 09:16:53	83.155
07/24/02 05:59:53	83.667	07/24/02 07:05:53	83.269	07/24/02 08:11:53	84.264	07/24/02 09:17:53	83.525
07/24/02 06:00:53	84.406	07/24/02 07:06:53	77.865	07/24/02 08:12:53	83.667	07/24/02 09:18:53	73.144
07/24/02 06:01:53	83.411	07/24/02 07:07:53	84.662	07/24/02 08:13:53	83.269	07/24/02 09:19:53	76.529
07/24/02 06:02:53	84.349	07/24/02 07:08:53	88.388	07/24/02 08:14:53	84.093	07/24/02 09:20:53	105.678
07/24/02 06:03:53	83.326	07/24/02 07:09:53	82.671	07/24/02 08:15:53	82.103	07/24/02 09:21:53	91.800
07/24/02 06:04:53	84.349	07/24/02 07:10:53	81.107	07/24/02 08:16:53	84.719	07/24/02 09:22:53	85.345
07/24/02 06:05:53	83.980	07/24/02 07:11:53	85.089	07/24/02 08:17:53	83.212	07/24/02 09:23:53	82.359
07/24/02 06:06:53	83.582	07/24/02 07:12:53	81.107	07/24/02 08:18:53	82.529	07/24/02 09:24:53	83.212
07/24/02 06:07:53	83.894	07/24/02 07:13:53	84.264	07/24/02 08:19:53	83.411	07/24/02 09:25:53	83.041
07/24/02 06:08:53	84.349	07/24/02 07:14:53	82.359	07/24/02 08:20:53	85.003	07/24/02 09:26:53	82.472
07/24/02 06:09:53	83.525	07/24/02 07:15:53	85.259	07/24/02 08:21:53	83.582	07/24/02 09:27:53	83.525
07/24/02 06:10:53	84.520	07/24/02 07:16:53	85.089	07/24/02 08:22:53	83.354	07/24/02 09:28:53	81.306
07/24/02 06:11:53	83.667	07/24/02 07:17:53	84.093	07/24/02 08:23:53	75.960	07/24/02 09:29:53	82.785
07/24/02 06:12:53	83.724	07/24/02 07:18:53	83.837	07/24/02 08:24:53	69.760	07/24/02 09:30:53	82.529
07/24/02 06:13:53	83.980	07/24/02 07:19:53	83.781	07/24/02 08:25:53	62.679	07/24/02 09:31:53	80.795
07/24/02 06:14:53	83.781	07/24/02 07:20:53	83.894	07/24/02 08:26:53	61.911	07/24/02 09:32:53	83.326
07/24/02 06:15:53	83.667	07/24/02 07:21:53	83.582	07/24/02 08:27:53	61.286	07/24/02 09:33:53	83.155
07/24/02 06:16:53	84.093	07/24/02 07:22:53	83.980	07/24/02 08:28:53	61.229	07/24/02 09:34:53	82.671
07/24/02 06:17:53	83.667	07/24/02 07:23:53	84.207	07/24/02 08:29:53	81.790	07/24/02 09:35:53	83.212
07/24/02 06:18:53	84.150	07/24/02 07:24:53	83.781	07/24/02 08:30:53	84.577	07/24/02 09:36:53	82.529
07/24/02 06:19:53	83.582	07/24/02 07:25:53	83.582	07/24/02 08:31:53	79.429	07/24/02 09:37:53	82.671
07/24/02 06:20:53	83.894	07/24/02 07:26:53	83.667	07/24/02 08:32:53	82.359	07/24/02 09:38:53	83.326
07/24/02 06:21:53	84.321	07/24/02 07:27:53	84.207	07/24/02 08:33:53	82.785	07/24/02 09:39:53	82.785
07/24/02 06:22:53	83.326	07/24/02 07:28:53	84.349	07/24/02 08:34:53	82.671	07/24/02 09:40:53	82.899
07/24/02 06:23:53	84.093	07/24/02 07:29:53	83.582	07/24/02 08:35:53	82.046	07/24/02 09:41:53	83.041
07/24/02 06:24:53	84.207	07/24/02 07:30:53	84.406	07/24/02 08:36:53	82.586	07/24/02 09:42:53	83.041
07/24/02 06:25:53	83.638	07/24/02 07:31:53	83.411	07/24/02 08:37:53	82.160	07/24/02 09:43:53	83.582
07/24/02 06:26:53	83.951	07/24/02 07:32:53	84.719	07/24/02 08:38:53	81.619	07/24/02 09:44:53	83.354
07/24/02 06:27:53	83.525	07/24/02 07:33:53	83.837	07/24/02 08:39:53	82.160	07/24/02 09:45:53	83.098
07/24/02 06:28:53	83.781	07/24/02 07:34:53	84.321	07/24/02 08:40:53	81.534	07/24/02 09:46:53	82.643
07/24/02 06:29:53	83.951	07/24/02 07:35:53	84.321	07/24/02 08:41:53	81.534	07/24/02 09:47:53	83.212
07/24/02 06:30:53	83.525	07/24/02 07:36:53	83.525	07/24/02 08:42:53	82.302	07/24/02 09:48:53	82.529
07/24/02 06:31:53	83.980	07/24/02 07:37:53	84.264	07/24/02 08:43:53	83.468	07/24/02 09:49:53	82.842
07/24/02 06:32:53	83.894	07/24/02 07:38:53	83.894	07/24/02 08:44:53	82.671	07/24/02 09:50:53	83.354
07/24/02 06:33:53	84.150	07/24/02 07:39:53	84.093	07/24/02 08:45:53	82.103	07/24/02 09:51:53	83.269
07/24/02 06:34:53	83.525	07/24/02 07:40:53	84.037	07/24/02 08:46:53	81.961	07/24/02 09:52:53	83.468
07/24/02 06:35:53	83.638	07/24/02 07:41:53	84.406	07/24/02 08:47:53	79.373	07/24/02 09:53:53	82.359
07/24/02 06:36:53	83.724	07/24/02 07:42:53	83.098	07/24/02 08:48:53	80.937	07/24/02 09:54:53	84.321
07/24/02 06:37:53	83.667	07/24/02 07:43:53	84.264	07/24/02 08:49:53	81.050	07/24/02 09:55:53	82.728
07/24/02 06:38:53	84.150	07/24/02 07:44:53	84.321	07/24/02 08:50:53	79.259	07/24/02 09:56:53	83.411
07/24/02 06:39:53	82.899	07/24/02 07:45:53	83.525	07/24/02 08:51:53	79.259	07/24/02 09:57:53	83.837
07/24/02 06:40:53	83.980	07/24/02 07:46:53	84.406	07/24/02 08:52:53	79.429	07/24/02 09:58:53	82.529
07/24/02 06:41:53	83.525	07/24/02 07:47:53	82.842	07/24/02 08:53:53	79.174	07/24/02 09:59:53	83.837
07/24/02 06:42:53	84.662	07/24/02 07:48:53	84.150	07/24/02 08:54:53	74.140	07/24/02 10:00:53	81.420
07/24/02 06:43:53	83.212	07/24/02 07:49:53	83.582	07/24/02 08:55:53	75.334	07/24/02 10:01:53	83.582
07/24/02 06:44:53	84.520	07/24/02 07:50:53	84.150	07/24/02 08:56:53	79.060	07/24/02 10:02:53	82.529
07/24/02 06:45:53	82.842	07/24/02 07:51:53	81.733	07/24/02 08:57:53	77.439	07/24/02 10:03:53	82.643
07/24/02 06:46:53	83.781	07/24/02 07:52:53	85.515	07/24/02 08:58:53	81.847	07/24/02 10:04:53	83.326
07/24/02 06:47:53	84.037	07/24/02 07:53:53	83.638	07/24/02 08:59:53	82.416	07/24/02 10:05:53	83.098
07/24/02 06:48:53	83.525	07/24/02 07:54:53	82.842	07/24/02 09:00:53	79.941	07/24/02 10:06:53	81.363
07/24/02 06:49:53	84.207	07/24/02 07:55:53	83.724	07/24/02 09:01:53	79.913	07/24/02 10:07:53	81.420
07/24/02 06:50:53	82.899	07/24/02 07:56:53	83.980	07/24/02 09:02:53	83.354	07/24/02 10:08:53	81.420
07/24/02 06:51:53	84.207	07/24/02 07:57:53	84.037	07/24/02 09:03:53	85.259	07/24/02 10:09:53	81.904
07/24/02 06:52:53	83.781	07/24/02 07:58:53	83.667	07/24/02 09:04:53	82.529	07/24/02 10:10:53	82.216
07/24/02 06:53:53	83.667	07/24/02 07:59:53	84.321	07/24/02 09:05:53	83.781	07/24/02 10:11:53	81.420
07/24/02 06:54:53	83.667	07/24/02 08:00:53	83.894	07/24/02 09:06:53	82.302	07/24/02 10:12:53	81.790
07/24/02 06:55:53	84.349	07/24/02 08:01:53	84.093	07/24/02 09:07:53	83.894	07/24/02 10:13:53	82.160
07/24/02 06:56:53	82.728	07/24/02 08:02:53	84.776	07/24/02 09:08:53	83.212	07/24/02 10:14:53	81.591

CARLSON CIR. - NO. 7557 cont.

Date	Time	Pres (PSI)
07/24/02	10:15:53	81.733
07/24/02	10:16:53	80.482
07/24/02	10:17:53	79.941
07/24/02	10:18:53	81.363
07/24/02	10:19:53	80.937
07/24/02	10:20:53	80.851
07/24/02	10:21:53	80.311
07/24/02	10:22:53	80.539
07/24/02	10:23:53	74.168
07/24/02	10:24:53	81.989
07/24/02	10:25:53	83.638
07/24/02	10:26:53	79.429
07/24/02	10:27:53	82.671
07/24/02	10:28:53	87.193
07/24/02	10:29:53	81.847
07/24/02	10:30:53	83.155
07/24/02	10:31:53	81.989
07/24/02	10:32:53	83.638
07/24/02	10:33:53	82.529
07/24/02	10:34:53	82.586
07/24/02	10:35:53	82.728
07/24/02	10:36:53	81.961
07/24/02	10:37:53	83.411
07/24/02	10:38:53	82.586
07/24/02	10:39:53	82.273
07/24/02	10:40:53	82.785
07/24/02	10:41:53	83.212
07/24/02	10:42:53	82.728
07/24/02	10:43:53	83.041
07/24/02	10:44:53	83.041
07/24/02	10:45:53	82.160
07/24/02	10:46:53	83.155
07/24/02	10:47:53	83.354
07/24/02	10:48:53	82.359
07/24/02	10:49:53	82.785
07/24/02	10:50:53	82.785
07/24/02	10:51:53	82.216
07/24/02	10:52:53	80.226
07/24/02	10:53:53	81.989
07/24/02	10:54:53	83.667
07/24/02	10:55:53	82.785
07/24/02	10:56:53	81.221
07/24/02	10:57:53	83.468
07/24/02	10:58:53	81.534
07/24/02	10:59:53	81.164
07/24/02	11:00:53	74.140
07/24/02	11:01:53	66.262
07/24/02	11:02:53	62.110
07/24/02	11:03:53	58.129
07/24/02	11:04:53	59.949
07/24/02	11:05:53	71.410
07/24/02	11:06:53	64.840
07/24/02	11:07:53	60.688
07/24/02	11:08:53	53.977
07/24/02	11:09:53	53.237
07/24/02	11:10:53	52.868
07/24/02	11:11:53	53.408
07/24/02	11:12:53	53.095
07/24/02	11:13:53	54.091
07/24/02	11:14:53	54.773
07/24/02	11:15:53	54.460
07/24/02	11:16:53	54.091
07/24/02	11:17:53	52.669
07/24/02	11:18:53	56.280
07/24/02	11:19:53	71.865
07/24/02	11:20:53	79.117
07/24/02	11:21:53	74.766
07/24/02	11:22:53	71.239
07/24/02	11:23:53	62.793
07/24/02	11:24:53	59.920
07/24/02	11:25:53	62.793
07/24/02	11:26:53	64.670
07/24/02	11:27:53	67.315
07/24/02	11:28:53	73.230
07/24/02	11:29:53	85.942
07/24/02	11:30:53	82.842
07/24/02	11:31:53	80.624
07/24/02	11:32:53	82.103
07/24/02	11:33:53	81.676
07/24/02	11:34:53	82.671
07/24/02	11:35:53	81.420
07/24/02	11:36:53	81.164
07/24/02	11:37:53	83.894
07/24/02	11:38:53	82.643
07/24/02	11:39:53	83.582
07/24/02	11:40:53	82.671
07/24/02	11:41:53	82.984
07/24/02	11:42:53	83.098
07/24/02	11:43:53	82.529
07/24/02	11:44:53	81.961
07/24/02	11:45:53	83.951
07/24/02	11:46:53	81.989
07/24/02	11:47:53	82.359
07/24/02	11:48:53	82.956
07/24/02	11:49:53	83.354
07/24/02	11:50:53	81.961
07/24/02	11:51:53	83.894
07/24/02	11:52:53	82.529
07/24/02	11:53:53	82.359
07/24/02	11:54:53	83.468
07/24/02	11:55:53	82.671
07/24/02	11:56:53	83.041
07/24/02	11:57:53	82.416
07/24/02	11:58:53	81.534
07/24/02	11:59:53	83.155
07/24/02	12:00:53	82.586
07/24/02	12:01:53	82.671
07/24/02	12:02:53	82.216
07/24/02	12:03:53	81.534
07/24/02	12:04:53	82.643
07/24/02	12:05:53	82.785
07/24/02	12:06:53	80.994
07/24/02	12:07:53	83.837
07/24/02	12:08:53	82.728
07/24/02	12:09:53	82.416
07/24/02	12:10:53	82.956
07/24/02	12:11:53	81.989
07/24/02	12:12:53	82.302
07/24/02	12:13:53	83.041
07/24/02	12:14:53	81.904
07/24/02	12:15:53	81.989
07/24/02	12:16:53	75.221
07/24/02	12:17:53	66.006
07/24/02	12:18:53	74.453
07/24/02	12:19:53	75.533
07/24/02	12:20:53	81.278
07/24/02	12:21:53	84.150
07/24/02	12:22:53	82.302
07/24/02	12:23:53	83.894
07/24/02	12:24:53	81.961
07/24/02	12:25:53	84.321
07/24/02	12:26:53	81.847
07/24/02	12:27:53	82.899
07/24/02	12:28:53	82.728
07/24/02	12:29:53	81.363
07/24/02	12:30:53	83.326
07/24/02	12:31:53	81.989
07/24/02	12:32:53	81.989
07/24/02	12:33:53	81.534
07/24/02	12:34:53	82.586
07/24/02	12:35:53	82.586
07/24/02	12:36:53	82.956
07/24/02	12:37:53	82.728
07/24/02	12:38:53	82.643
07/24/02	12:39:53	82.956
07/24/02	12:40:53	82.643
07/24/02	12:41:53	82.842
07/24/02	12:42:53	82.899
07/24/02	12:43:53	82.842
07/24/02	12:44:53	81.961
07/24/02	12:45:53	81.961
07/24/02	12:46:53	82.728
07/24/02	12:47:53	82.956
07/24/02	12:48:53	79.600
07/24/02	12:49:53	83.354
07/24/02	12:50:53	81.050
07/24/02	12:51:53	83.098
07/24/02	12:52:53	80.994
07/24/02	12:53:53	73.855
07/24/02	12:54:53	77.865
07/24/02	12:55:53	78.178
07/24/02	12:56:53	78.548
07/24/02	12:57:53	79.856
07/24/02	12:58:53	79.174
07/24/02	12:59:53	79.117
07/24/02	13:00:53	75.875
07/24/02	13:01:53	75.135
07/24/02	13:02:53	75.277
07/24/02	13:03:53	73.486
07/24/02	13:04:53	74.652
07/24/02	13:05:53	74.168
07/24/02	13:06:53	74.339
07/24/02	13:07:53	74.965
07/24/02	13:08:53	74.851
07/24/02	13:09:53	75.021
07/24/02	13:10:53	75.135
07/24/02	13:11:53	74.140
07/24/02	13:12:53	74.168
07/24/02	13:13:53	73.969
07/24/02	13:14:53	75.192
07/24/02	13:15:53	75.533
07/24/02	13:16:53	85.686
07/24/02	13:17:53	92.170
07/24/02	13:18:53	86.084
07/24/02	13:19:53	79.913
07/24/02	13:20:53	82.472
07/24/02	13:21:53	82.103
07/24/02	13:22:53	82.416
07/24/02	13:23:53	83.411
07/24/02	13:24:53	82.671
07/24/02	13:25:53	82.899
07/24/02	13:26:53	81.363
07/24/02	13:27:53	82.586
07/24/02	13:28:53	82.728
07/24/02	13:29:53	81.363
07/24/02	13:30:53	-0.028
07/24/02	13:31:53	-0.085
07/24/02	13:32:53	-0.085
07/24/02	13:33:53	-0.085
07/24/02	13:34:53	-0.028
07/24/02	13:35:53	-0.085
07/24/02	13:36:53	-0.028
07/24/02	13:37:53	-0.085
07/24/02	13:38:53	-0.028
07/24/02	13:39:53	-0.028
07/24/02	13:40:53	-0.085
07/24/02	13:41:53	-0.028
07/24/02	13:42:53	-0.028
07/24/02	13:43:53	-0.085
07/24/02	13:44:53	-0.085
07/24/02	13:45:53	-0.085
07/24/02	13:46:53	-0.028
07/24/02	13:47:53	-0.028
07/24/02	13:48:53	-0.028
07/24/02	13:49:53	-0.028
07/24/02	13:50:53	0.000
07/24/02	13:51:53	-0.028
07/24/02	13:52:53	-0.028
07/24/02	13:53:53	0.000
07/24/02	13:54:53	0.000
07/24/02	13:55:53	0.000
07/24/02	13:56:53	-0.028
07/24/02	13:57:53	-0.028
07/24/02	13:58:53	0.000
07/24/02	13:59:53	-0.028
07/24/02	14:00:53	-0.028
07/24/02	14:01:53	0.000
07/24/02	14:02:53	-0.028
07/24/02	14:03:53	-0.028
07/24/02	14:04:53	-0.028
07/24/02	14:05:53	-0.028
07/24/02	14:06:53	-0.028
07/24/02	14:07:53	-0.028
07/24/02	14:08:53	-0.028
07/24/02	14:09:53	-0.028
07/24/02	14:10:53	-0.028
07/24/02	14:11:53	0.000
07/24/02	14:12:53	-0.028
07/24/02	14:13:53	-0.028
07/24/02	14:14:53	0.000
07/24/02	14:15:53	-0.028
07/24/02	14:16:53	0.000
07/24/02	14:17:53	-0.028
07/24/02	14:18:53	0.000
07/24/02	14:19:53	0.000
07/24/02	14:20:53	-0.028
07/24/02	14:21:53	-0.028
07/24/02	14:22:53	-0.028
07/24/02	14:23:53	0.000
07/24/02	14:24:53	-0.028
07/24/02	14:25:53	-0.028
07/24/02	14:26:53	-0.028
07/24/02	14:27:53	-0.028
07/24/02	14:28:53	-0.028
07/24/02	14:29:53	-0.028
07/24/02	14:30:53	-0.028
07/24/02	14:31:53	0.000
07/24/02	14:32:53	0.000
07/24/02	14:33:53	-0.028
07/24/02	14:34:53	-0.028
07/24/02	14:35:53	-0.028
07/24/02	14:36:53	-0.028
07/24/02	14:37:53	-0.028
07/24/02	14:38:53	-0.028

CARLSON CIR. - NO. 7557 cont.

Date	Time	Pres (PSI)
07/24/02	14:39:53	-0.028
07/24/02	14:40:53	-0.085
07/24/02	14:41:53	-0.028
07/24/02	14:42:53	-0.028
07/24/02	14:43:53	-0.028
07/24/02	14:44:53	-0.085
07/24/02	14:45:53	-0.028
07/24/02	14:46:53	-0.028
07/24/02	14:47:53	-0.028
07/24/02	14:48:53	-0.028
07/24/02	14:49:53	-0.028
07/24/02	14:50:53	-0.028
07/24/02	14:51:53	-0.085
07/24/02	14:52:53	-0.028
07/24/02	14:53:53	-0.085
07/24/02	14:54:53	-0.028
07/24/02	14:55:53	-0.028
07/24/02	14:56:53	-0.028
07/24/02	14:57:53	-0.028
07/24/02	14:58:53	0.000
07/24/02	14:59:53	0.000
07/24/02	15:00:53	-0.028
07/24/02	15:01:53	-0.028
07/24/02	15:02:53	0.000
07/24/02	15:03:53	-0.028
07/24/02	15:04:53	-0.028
07/24/02	15:05:53	0.000
07/24/02	15:06:53	0.000
07/24/02	15:07:53	0.000
07/24/02	15:08:53	0.000
07/24/02	15:09:53	0.028
07/24/02	15:10:53	0.000
07/24/02	15:11:53	0.000
07/24/02	15:12:53	0.000
07/24/02	15:13:53	0.028
07/24/02	15:14:53	0.028
07/24/02	15:15:53	0.028
07/24/02	15:16:53	0.028
07/24/02	15:17:53	0.000
07/24/02	15:18:53	0.028
07/24/02	15:19:53	0.000
07/24/02	15:20:53	0.028
07/24/02	15:21:53	0.028
07/24/02	15:22:53	0.000
07/24/02	15:23:53	0.028
07/24/02	15:24:53	0.028
07/24/02	15:25:53	0.028
07/24/02	15:26:53	0.000
07/24/02	15:27:53	0.028
07/24/02	15:28:53	0.028
07/24/02	15:29:53	0.028
07/24/02	15:30:53	0.000
07/24/02	15:31:53	0.000
07/24/02	15:32:53	0.028
07/24/02	15:33:53	0.000
07/24/02	15:34:53	0.000
07/24/02	15:35:53	0.028
07/24/02	15:36:53	0.028
07/24/02	15:37:53	0.028
07/24/02	15:38:53	0.028
07/24/02	15:39:53	0.000
07/24/02	15:40:53	0.028
07/24/02	15:41:53	0.028
07/24/02	15:42:53	0.028
07/24/02	15:43:53	0.028
07/24/02	15:44:53	0.000
07/24/02	15:45:53	0.000
07/24/02	15:46:53	0.028
07/24/02	15:47:53	0.028
07/24/02	15:48:53	0.028
07/24/02	15:49:53	0.028
07/24/02	15:50:53	0.000
07/24/02	15:51:53	0.028
07/24/02	15:52:53	0.028
07/24/02	15:53:53	0.028
07/24/02	15:54:53	0.000
07/24/02	15:55:53	0.028
07/24/02	15:56:53	0.028
07/24/02	15:57:53	0.000
07/24/02	15:58:53	0.000
07/24/02	15:59:53	0.000
07/24/02	16:00:53	0.028
07/24/02	16:01:53	0.028
07/24/02	16:02:53	0.028
07/24/02	16:03:53	0.028
07/24/02	16:04:53	0.000
07/24/02	16:05:53	0.028
07/24/02	16:06:53	0.000
07/24/02	16:07:53	0.000
07/24/02	16:08:53	0.000
07/24/02	16:09:53	0.000
07/24/02	16:10:53	0.028
07/24/02	16:11:53	0.028
07/24/02	16:12:53	0.000
07/24/02	16:13:53	0.000
07/24/02	16:14:53	0.028
07/24/02	16:15:53	0.000
07/24/02	16:16:53	0.028
07/24/02	16:17:53	0.000
07/24/02	16:18:53	0.028
07/24/02	16:19:53	0.000
07/24/02	16:20:53	0.028
07/24/02	16:21:53	0.000
07/24/02	16:22:53	0.028
07/24/02	16:23:53	0.000
07/24/02	16:24:53	0.000
07/24/02	16:25:53	0.000
07/24/02	16:26:53	0.028
07/24/02	16:27:53	0.028
07/24/02	16:28:53	0.028
07/24/02	16:29:53	0.000
07/24/02	16:30:53	0.000
07/24/02	16:31:53	0.000
07/24/02	16:32:53	0.028
07/24/02	16:33:53	0.000
07/24/02	16:34:53	0.028
07/24/02	16:35:53	0.000
07/24/02	16:36:53	0.000
07/24/02	16:37:53	0.028
07/24/02	16:38:53	0.000

CHAMPIONS AND POST - NO. 7484

Date	Time	Pres (PSI)
07/25/02	11:45:06	-0.626
07/25/02	11:46:06	-0.626
07/25/02	11:47:06	-0.626
07/25/02	11:48:06	-0.626
07/25/02	11:49:06	-0.711
07/25/02	11:50:06	-0.711
07/25/02	11:51:06	-0.796
07/25/02	11:52:06	-0.796
07/25/02	11:53:06	-0.796
07/25/02	11:54:06	-0.796
07/25/02	11:55:06	-0.796
07/25/02	11:56:06	-0.796
07/25/02	11:57:06	-0.796
07/25/02	11:58:06	-0.882
07/25/02	11:59:06	-0.882
07/25/02	12:00:06	-0.882
07/25/02	12:01:06	-0.796
07/25/02	12:02:06	-0.796
07/25/02	12:03:06	-0.882
07/25/02	12:04:06	-0.882
07/25/02	12:05:06	-0.882
07/25/02	12:06:06	-0.882
07/25/02	12:07:06	-0.882
07/25/02	12:08:06	-0.882
07/25/02	12:09:06	-0.882
07/25/02	12:10:06	-0.967
07/25/02	12:11:06	-0.967
07/25/02	12:12:06	-0.882
07/25/02	12:13:06	-0.967
07/25/02	12:14:06	-0.967
07/25/02	12:15:06	-0.967
07/25/02	12:16:06	-0.967
07/25/02	12:17:06	-0.967
07/25/02	12:18:06	-0.967
07/25/02	12:19:06	-0.967
07/25/02	12:20:06	-0.967
07/25/02	12:21:06	-0.967
07/25/02	12:22:06	-0.967
07/25/02	12:23:06	-0.967
07/25/02	12:24:06	-0.967
07/25/02	12:25:06	-1.052
07/25/02	12:26:06	-1.052
07/25/02	12:27:06	-0.967
07/25/02	12:28:06	-1.052
07/25/02	12:29:06	-0.967
07/25/02	12:30:06	-0.967
07/25/02	12:31:06	-0.967
07/25/02	12:32:06	-0.967
07/25/02	12:33:06	-1.052
07/25/02	12:34:06	-1.052
07/25/02	12:35:06	-0.967
07/25/02	12:36:06	-1.052
07/25/02	12:37:06	-1.052
07/25/02	12:38:06	-1.052
07/25/02	12:39:06	-1.052
07/25/02	12:40:06	-1.052
07/25/02	12:41:06	-1.052
07/25/02	12:42:06	-1.138
07/25/02	12:43:06	-1.138
07/25/02	12:44:06	-1.052
07/25/02	12:45:06	-1.138
07/25/02	12:46:06	-1.052
07/25/02	12:47:06	-1.052
07/25/02	12:48:06	-1.052
07/25/02	12:49:06	-1.138
07/25/02	12:50:06	-1.138
07/25/02	12:51:06	-1.138
07/25/02	12:52:06	-1.052
07/25/02	12:53:06	-1.052
07/25/02	12:54:06	-1.052
07/25/02	12:55:06	-1.052
07/25/02	12:56:06	-1.052
07/25/02	12:57:06	-1.052
07/25/02	12:58:06	-1.052
07/25/02	12:59:06	-1.052
07/25/02	13:00:06	-1.052
07/25/02	13:01:06	-1.052
07/25/02	13:02:06	-1.052
07/25/02	13:03:06	-1.138
07/25/02	13:04:06	-1.052
07/25/02	13:05:06	-1.052
07/25/02	13:06:06	-1.052
07/25/02	13:07:06	-1.052
07/25/02	13:08:06	-1.052
07/25/02	13:09:06	-1.052
07/25/02	13:10:06	-0.967
07/25/02	13:11:06	-1.052
07/25/02	13:12:06	-1.052
07/25/02	13:13:06	63.219
07/25/02	13:14:06	69.334
07/25/02	13:15:06	68.196
07/25/02	13:16:06	70.869
07/25/02	13:17:06	68.338
07/25/02	13:18:06	70.045
07/25/02	13:19:06	68.765
07/25/02	13:20:06	70.130
07/25/02	13:21:06	67.457
07/25/02	13:22:06	69.817
07/25/02	13:23:06	67.030
07/25/02	13:24:06	71.125
07/25/02	13:25:06	68.196
07/25/02	13:26:06	69.902
07/25/02	13:27:06	68.338
07/25/02	13:28:06	39.587
07/25/02	13:29:06	42.601
07/25/02	13:30:06	48.716
07/25/02	13:31:06	46.924
07/25/02	13:32:06	47.095
07/25/02	13:33:06	46.014
07/25/02	13:34:06	46.099
07/25/02	13:35:06	46.753
07/25/02	13:36:06	46.185
07/25/02	13:37:06	46.668
07/25/02	13:38:06	46.355
07/25/02	13:39:06	42.687
07/25/02	13:40:06	43.426
07/25/02	13:41:06	44.393
07/25/02	13:42:06	43.909
07/25/02	13:43:06	43.341
07/25/02	13:44:06	49.114
07/25/02	13:45:06	46.185
07/25/02	13:46:06	41.464
07/25/02	13:47:06	42.999
07/25/02	13:48:06	43.653
07/25/02	13:49:06	47.578
07/25/02	13:50:06	47.407
07/25/02	13:51:06	47.578
07/25/02	13:52:06	53.522
07/25/02	13:53:06	67.940
07/25/02	13:54:06	81.306
07/25/02	13:55:06	66.973
07/25/02	13:56:06	69.732
07/25/02	13:57:06	67.855
07/25/02	13:58:06	68.907
07/25/02	13:59:06	68.026
07/25/02	14:00:06	68.594
07/25/02	14:01:06	67.286
07/25/02	14:02:06	68.509
07/25/02	14:03:06	68.424
07/25/02	14:04:06	68.680
07/25/02	14:05:06	68.509
07/25/02	14:06:06	69.419
07/25/02	14:07:06	68.338
07/25/02	14:08:06	68.424
07/25/02	14:09:06	68.907
07/25/02	14:10:06	67.855
07/25/02	14:11:06	69.248
07/25/02	14:12:06	68.111
07/25/02	14:13:06	68.992
07/25/02	14:14:06	68.765
07/25/02	14:15:06	67.286
07/25/02	14:16:06	-1.792
07/25/02	14:17:06	-1.792

CHEATHAM AND MCGHEHEE - NO. 7490

Date	Time	Pres (PSI)
07/22/02	07:56:05	-0.057
07/22/02	07:57:05	-0.057
07/22/02	07:58:05	-0.057
07/22/02	07:59:05	-0.057
07/22/02	08:00:05	-0.057
07/22/02	08:01:05	-0.057
07/22/02	08:02:05	-0.057
07/22/02	08:03:05	-0.142
07/22/02	08:04:05	-0.142
07/22/02	08:05:05	-0.142
07/22/02	08:06:05	-0.142
07/22/02	08:07:05	-0.142
07/22/02	08:08:05	-0.142
07/22/02	08:09:05	-0.142
07/22/02	08:10:05	-0.142
07/22/02	08:11:05	-0.228
07/22/02	08:12:05	-0.142
07/22/02	08:13:05	-0.142
07/22/02	08:14:05	-0.142
07/22/02	08:15:05	-0.228
07/22/02	08:16:05	-0.142
07/22/02	08:17:05	-0.142
07/22/02	08:18:05	-0.142
07/22/02	08:19:05	-0.142
07/22/02	08:20:05	-0.142
07/22/02	08:21:05	-0.142
07/22/02	08:22:05	-0.142
07/22/02	08:23:05	-0.142
07/22/02	08:24:05	-0.142
07/22/02	08:25:05	-0.142
07/22/02	08:26:05	-0.142
07/22/02	08:27:05	-0.142
07/22/02	08:28:05	-0.057
07/22/02	08:29:05	89.013
07/22/02	08:30:05	88.075
07/22/02	08:31:05	89.611
07/22/02	08:32:05	89.866
07/22/02	08:33:05	89.355
07/22/02	08:34:05	89.866
07/22/02	08:35:05	87.307
07/22/02	08:36:05	89.184
07/22/02	08:37:05	87.990
07/22/02	08:38:05	67.798
07/22/02	08:39:05	74.083
07/22/02	08:40:05	78.576
07/22/02	08:41:05	79.515
07/22/02	08:42:05	80.027
07/22/02	08:43:05	79.174
07/22/02	08:44:05	75.505
07/22/02	08:45:05	76.358
07/22/02	08:46:05	75.590
07/22/02	08:47:05	77.553
07/22/02	08:48:05	75.164
07/22/02	08:49:05	85.032
07/22/02	08:50:05	86.454
07/22/02	08:51:05	85.032
07/22/02	08:52:05	86.454
07/22/02	08:53:05	86.027
07/22/02	08:54:05	88.245
07/22/02	08:55:05	89.269
07/22/02	08:56:05	88.757
07/22/02	08:57:05	88.331
07/22/02	08:58:05	88.160
07/22/02	08:59:05	87.222
07/22/02	09:00:05	88.075
07/22/02	09:01:05	86.880
07/22/02	09:02:05	88.757
07/22/02	09:03:05	87.648
07/22/02	09:04:05	88.075
07/22/02	09:05:05	87.990
07/22/02	09:06:05	88.160
07/22/02	09:07:05	87.819
07/22/02	09:08:05	87.990
07/22/02	09:09:05	87.734
07/22/02	09:10:05	86.198
07/22/02	09:11:05	87.136
07/22/02	09:12:05	87.136
07/22/02	09:13:05	83.240
07/22/02	09:14:05	84.349
07/22/02	09:15:05	85.373
07/22/02	09:16:05	84.093
07/22/02	09:17:05	91.459
07/22/02	09:18:05	85.117
07/22/02	09:19:05	86.283
07/22/02	09:20:05	85.458
07/22/02	09:21:05	85.629
07/22/02	09:22:05	87.307
07/22/02	09:23:05	88.757
07/22/02	09:24:05	88.331
07/22/02	09:25:05	86.795
07/22/02	09:26:05	84.776
07/22/02	09:27:05	87.136
07/22/02	09:28:05	86.198
07/22/02	09:29:05	87.222
07/22/02	09:30:05	86.795
07/22/02	09:31:05	85.714
07/22/02	09:32:05	86.795
07/22/02	09:33:05	87.222
07/22/02	09:34:05	86.624
07/22/02	09:35:05	86.539
07/22/02	09:36:05	85.373
07/22/02	09:37:05	84.179
07/22/02	09:38:05	84.264
07/22/02	09:39:05	86.198
07/22/02	09:40:05	86.966
07/22/02	09:41:05	86.113
07/22/02	09:42:05	86.539
07/22/02	09:43:05	85.288
07/22/02	09:44:05	87.478
07/22/02	09:45:05	86.710
07/22/02	09:46:05	87.392
07/22/02	09:47:05	87.990
07/22/02	09:48:05	86.198
07/22/02	09:49:05	86.454
07/22/02	09:50:05	85.203
07/22/02	09:51:05	86.454
07/22/02	09:52:05	87.563
07/22/02	09:53:05	86.198
07/22/02	09:54:05	85.288
07/22/02	09:55:05	85.032
07/22/02	09:56:05	84.861
07/22/02	09:57:05	85.544
07/22/02	09:58:05	83.411
07/22/02	09:59:05	84.691
07/22/02	10:00:05	85.800
07/22/02	10:01:05	85.117
07/22/02	10:02:05	86.710
07/22/02	10:03:05	83.326
07/22/02	10:04:05	84.435
07/22/02	10:05:05	85.373
07/22/02	10:06:05	84.264
07/22/02	10:07:05	84.691
07/22/02	10:08:05	84.947
07/22/02	10:09:05	86.283
07/22/02	10:10:05	86.283
07/22/02	10:11:05	86.198
07/22/02	10:12:05	83.752
07/22/02	10:13:05	85.629
07/22/02	10:14:05	85.373
07/22/02	10:15:05	85.458
07/22/02	10:16:05	84.605
07/22/02	10:17:05	83.837
07/22/02	10:18:05	84.008
07/22/02	10:19:05	85.942
07/22/02	10:20:05	85.032
07/22/02	10:21:05	84.349
07/22/02	10:22:05	85.117
07/22/02	10:23:05	84.179
07/22/02	10:24:05	84.179
07/22/02	10:25:05	87.563
07/22/02	10:26:05	85.373
07/22/02	10:27:05	85.629
07/22/02	10:28:05	84.520
07/22/02	10:29:05	83.837
07/22/02	10:30:05	88.075
07/22/02	10:31:05	84.349
07/22/02	10:32:05	85.203
07/22/02	10:33:05	85.373
07/22/02	10:34:05	84.435
07/22/02	10:35:05	84.349
07/22/02	10:36:05	83.155
07/22/02	10:37:05	86.113
07/22/02	10:38:05	84.093
07/22/02	10:39:05	84.691
07/22/02	10:40:05	85.117
07/22/02	10:41:05	84.435
07/22/02	10:42:05	85.942
07/22/02	10:43:05	78.662
07/22/02	10:44:05	85.032
07/22/02	10:45:05	84.691
07/22/02	10:46:05	85.032
07/22/02	10:47:05	85.629
07/22/02	10:48:05	84.093
07/22/02	10:49:05	85.714
07/22/02	10:50:05	85.458
07/22/02	10:51:05	85.942
07/22/02	10:52:05	85.942
07/22/02	10:53:05	84.776
07/22/02	10:54:05	86.710
07/22/02	10:55:05	84.008
07/22/02	10:56:05	85.800
07/22/02	10:57:05	85.544
07/22/02	10:58:05	85.203
07/22/02	10:59:05	85.629
07/22/02	11:00:05	85.629
07/22/02	11:01:05	85.942
07/22/02	11:02:05	85.800
07/22/02	11:03:05	81.193
07/22/02	11:04:05	83.155
07/22/02	11:05:05	82.387
07/22/02	11:06:05	83.752
07/22/02	11:07:05	81.193
07/22/02	11:08:05	83.923
07/22/02	11:09:05	84.947
07/22/02	11:10:05	84.776
07/22/02	11:11:05	84.947
07/22/02	11:12:05	82.899
07/22/02	11:13:05	85.203
07/22/02	11:14:05	83.070
07/22/02	11:15:05	84.093
07/22/02	11:16:05	84.179
07/22/02	11:17:05	83.496
07/22/02	11:18:05	83.923
07/22/02	11:19:05	85.117
07/22/02	11:20:05	83.496
07/22/02	11:21:05	83.411
07/22/02	11:22:05	83.155
07/22/02	11:23:05	82.899
07/22/02	11:24:05	81.790
07/22/02	11:25:05	83.923
07/22/02	11:26:05	85.714
07/22/02	11:27:05	84.435
07/22/02	11:28:05	84.776
07/22/02	11:29:05	86.710
07/22/02	11:30:05	85.288
07/22/02	11:31:05	84.776
07/22/02	11:32:05	85.288
07/22/02	11:33:05	84.264
07/22/02	11:34:05	84.861
07/22/02	11:35:05	86.710
07/22/02	11:36:05	85.800
07/22/02	11:37:05	84.947
07/22/02	11:38:05	87.563
07/22/02	11:39:05	87.307
07/22/02	11:40:05	87.222
07/22/02	11:41:05	87.307
07/22/02	11:42:05	87.819
07/22/02	11:43:05	86.880
07/22/02	11:44:05	86.454
07/22/02	11:45:05	87.222
07/22/02	11:46:05	86.027
07/22/02	11:47:05	88.928
07/22/02	11:48:05	89.184
07/22/02	11:49:05	88.331
07/22/02	11:50:05	87.990
07/22/02	11:51:05	86.624
07/22/02	11:52:05	88.245
07/22/02	11:53:05	88.245
07/22/02	11:54:05	87.734
07/22/02	11:55:05	85.629
07/22/02	11:56:05	87.222
07/22/02	11:57:05	87.648
07/22/02	11:58:05	85.458
07/22/02	11:59:05	86.966
07/22/02	12:00:05	87.648
07/22/02	12:01:05	88.672
07/22/02	12:02:05	88.843
07/22/02	12:03:05	87.307
07/22/02	12:04:05	87.222
07/22/02	12:05:05	87.648
07/22/02	12:06:05	89.440
07/22/02	12:07:05	88.928
07/22/02	12:08:05	87.392
07/22/02	12:09:05	87.307
07/22/02	12:10:05	86.966
07/22/02	12:11:05	85.288
07/22/02	12:12:05	87.051
07/22/02	12:13:05	86.880
07/22/02	12:14:05	86.027
07/22/02	12:15:05	83.326
07/22/02	12:16:05	84.093
07/22/02	12:17:05	81.193
07/22/02	12:18:05	81.278
07/22/02	12:19:05	85.032

CHEATHAM AND MCGHEHEE - NO. 7490 cont.

Date	Time	Pres (PSI)
07/22/02	12:20:05	86.369
07/22/02	12:21:05	87.051
07/22/02	12:22:05	85.544
07/22/02	12:23:05	86.369
07/22/02	12:24:05	86.113
07/22/02	12:25:05	87.392
07/22/02	12:26:05	86.880
07/22/02	12:27:05	86.198
07/22/02	12:28:05	86.283
07/22/02	12:29:05	86.198
07/22/02	12:30:05	86.539
07/22/02	12:31:05	88.501
07/22/02	12:32:05	87.392
07/22/02	12:33:05	87.990
07/22/02	12:34:05	87.392
07/22/02	12:35:05	86.624
07/22/02	12:36:05	86.369
07/22/02	12:37:05	86.539
07/22/02	12:38:05	86.795
07/22/02	12:39:05	87.392
07/22/02	12:40:05	87.136
07/22/02	12:41:05	86.880
07/22/02	12:42:05	87.478
07/22/02	12:43:05	86.795
07/22/02	12:44:05	88.757
07/22/02	12:45:05	87.819
07/22/02	12:46:05	87.307
07/22/02	12:47:05	87.478
07/22/02	12:48:05	87.990
07/22/02	12:49:05	87.222
07/22/02	12:50:05	88.416
07/22/02	12:51:05	87.819
07/22/02	12:52:05	88.245
07/22/02	12:53:05	87.734
07/22/02	12:54:05	88.416
07/22/02	12:55:05	86.795
07/22/02	12:56:05	86.966
07/22/02	12:57:05	86.283
07/22/02	12:58:05	82.046
07/22/02	12:59:05	85.373
07/22/02	13:00:05	84.691
07/22/02	13:01:05	83.752
07/22/02	13:02:05	84.520
07/22/02	13:03:05	83.752
07/22/02	13:04:05	84.861
07/22/02	13:05:05	87.648
07/22/02	13:06:05	88.331
07/22/02	13:07:05	88.075
07/22/02	13:08:05	86.369
07/22/02	13:09:05	87.136
07/22/02	13:10:05	87.904
07/22/02	13:11:05	87.392
07/22/02	13:12:05	86.113
07/22/02	13:13:05	81.961
07/22/02	13:14:05	87.222
07/22/02	13:15:05	83.155
07/22/02	13:16:05	84.691
07/22/02	13:17:05	84.605
07/22/02	13:18:05	85.203
07/22/02	13:19:05	81.875
07/22/02	13:20:05	85.373
07/22/02	13:21:05	84.947
07/22/02	13:22:05	84.691
07/22/02	13:23:05	86.454
07/22/02	13:24:05	85.942
07/22/02	13:25:05	87.051
07/22/02	13:26:05	85.629
07/22/02	13:27:05	84.093
07/22/02	13:28:05	87.478
07/22/02	13:29:05	84.179
07/22/02	13:30:05	87.392
07/22/02	13:31:05	86.283
07/22/02	13:32:05	78.406
07/22/02	13:33:05	85.373
07/22/02	13:34:05	86.283
07/22/02	13:35:05	85.458
07/22/02	13:36:05	86.369
07/22/02	13:37:05	87.222
07/22/02	13:38:05	88.245
07/22/02	13:39:05	85.117
07/22/02	13:40:05	85.629
07/22/02	13:41:05	86.113
07/22/02	13:42:05	86.027
07/22/02	13:43:05	85.885
07/22/02	13:44:05	85.032
07/22/02	13:45:05	85.373
07/22/02	13:46:05	85.117
07/22/02	13:47:05	87.222
07/22/02	13:48:05	85.288
07/22/02	13:49:05	85.203
07/22/02	13:50:05	84.605
07/22/02	13:51:05	85.942
07/22/02	13:52:05	88.075
07/22/02	13:53:05	87.734
07/22/02	13:54:05	85.288
07/22/02	13:55:05	83.752
07/22/02	13:56:05	83.496
07/22/02	13:57:05	83.496
07/22/02	13:58:05	83.837
07/22/02	13:59:05	84.861
07/22/02	14:00:05	85.203
07/22/02	14:01:05	86.966
07/22/02	14:02:05	85.458
07/22/02	14:03:05	86.027
07/22/02	14:04:05	86.624
07/22/02	14:05:05	86.710
07/22/02	14:06:05	73.486
07/22/02	14:07:05	75.590
07/22/02	14:08:05	77.211
07/22/02	14:09:05	76.785
07/22/02	14:10:05	75.334
07/22/02	14:11:05	77.553
07/22/02	14:12:05	86.454
07/22/02	14:13:05	85.714
07/22/02	14:14:05	83.411
07/22/02	14:15:05	82.558
07/22/02	14:16:05	86.454
07/22/02	14:17:05	86.795
07/22/02	14:18:05	85.544
07/22/02	14:19:05	85.714
07/22/02	14:20:05	84.349
07/22/02	14:21:05	85.800
07/22/02	14:22:05	84.605
07/22/02	14:23:05	84.776
07/22/02	14:24:05	84.435
07/22/02	14:25:05	84.179
07/22/02	14:26:05	85.117
07/22/02	14:27:05	84.691
07/22/02	14:28:05	85.800
07/22/02	14:29:05	85.288
07/22/02	14:30:05	86.113
07/22/02	14:31:05	84.776
07/22/02	14:32:05	85.629
07/22/02	14:33:05	82.387
07/22/02	14:34:05	81.449
07/22/02	14:35:05	82.643
07/22/02	14:36:05	82.387
07/22/02	14:37:05	82.728
07/22/02	14:38:05	82.814
07/22/02	14:39:05	81.107
07/22/02	14:40:05	81.875
07/22/02	14:41:05	82.814
07/22/02	14:42:05	82.216
07/22/02	14:43:05	81.107
07/22/02	14:44:05	82.046
07/22/02	14:45:05	81.534
07/22/02	14:46:05	80.368
07/22/02	14:47:05	83.496
07/22/02	14:48:05	81.705
07/22/02	14:49:05	83.496
07/22/02	14:50:05	83.155
07/22/02	14:51:05	79.856
07/22/02	14:52:05	82.984
07/22/02	14:53:05	80.851
07/22/02	14:54:05	82.046
07/22/02	14:55:05	81.449
07/22/02	14:56:05	82.643
07/22/02	14:57:05	82.046
07/22/02	14:58:05	81.022
07/22/02	14:59:05	81.534
07/22/02	15:00:05	81.363
07/22/02	15:01:05	81.022
07/22/02	15:02:05	81.705
07/22/02	15:03:05	79.344
07/22/02	15:04:05	79.856
07/22/02	15:05:05	88.843
07/22/02	15:06:05	79.856
07/22/02	15:07:05	81.875
07/22/02	15:08:05	82.814
07/22/02	15:09:05	81.705
07/22/02	15:10:05	84.691
07/22/02	15:11:05	83.240
07/22/02	15:12:05	82.899
07/22/02	15:13:05	84.093
07/22/02	15:14:05	83.667
07/22/02	15:15:05	82.899
07/22/02	15:16:05	83.923
07/22/02	15:17:05	82.558
07/22/02	15:18:05	83.155
07/22/02	15:19:05	84.264
07/22/02	15:20:05	83.923
07/22/02	15:21:05	87.478
07/22/02	15:22:05	83.923
07/22/02	15:23:05	83.752
07/22/02	15:24:05	84.264
07/22/02	15:25:05	85.032
07/22/02	15:26:05	84.264
07/22/02	15:27:05	82.728
07/22/02	15:28:05	84.179
07/22/02	15:29:05	83.326
07/22/02	15:30:05	82.899
07/22/02	15:31:05	83.496
07/22/02	15:32:05	83.070
07/22/02	15:33:05	81.961
07/22/02	15:34:05	82.131
07/22/02	15:35:05	76.102
07/22/02	15:36:05	83.923
07/22/02	15:37:05	85.800
07/22/02	15:38:05	84.861
07/22/02	15:39:05	84.776
07/22/02	15:40:05	85.117
07/22/02	15:41:05	85.203
07/22/02	15:42:05	85.032
07/22/02	15:43:05	84.264
07/22/02	15:44:05	84.179
07/22/02	15:45:05	85.714
07/22/02	15:46:05	86.454
07/22/02	15:47:05	88.160
07/22/02	15:48:05	87.819
07/22/02	15:49:05	87.563
07/22/02	15:50:05	87.819
07/22/02	15:51:05	84.349
07/22/02	15:52:05	88.245
07/22/02	15:53:05	88.331
07/22/02	15:54:05	87.563
07/22/02	15:55:05	86.027
07/22/02	15:56:05	88.928
07/22/02	15:57:05	87.222
07/22/02	15:58:05	85.032
07/22/02	15:59:05	87.478
07/22/02	16:00:05	87.307
07/22/02	16:01:05	88.757
07/22/02	16:02:05	86.027
07/22/02	16:03:05	84.605
07/22/02	16:04:05	86.198
07/22/02	16:05:05	85.629
07/22/02	16:06:05	85.800
07/22/02	16:07:05	85.629
07/22/02	16:08:05	85.203
07/22/02	16:09:05	86.880
07/22/02	16:10:05	86.624
07/22/02	16:11:05	85.800
07/22/02	16:12:05	87.307
07/22/02	16:13:05	87.051
07/22/02	16:14:05	85.373
07/22/02	16:15:05	84.349
07/22/02	16:16:05	82.899
07/22/02	16:17:05	85.117
07/22/02	16:18:05	83.837
07/22/02	16:19:05	85.032
07/22/02	16:20:05	83.752
07/22/02	16:21:05	86.880
07/22/02	16:22:05	85.714
07/22/02	16:23:05	85.458
07/22/02	16:24:05	84.691
07/22/02	16:25:05	86.283
07/22/02	16:26:05	85.800
07/22/02	16:27:05	84.947
07/22/02	16:28:05	85.373
07/22/02	16:29:05	88.245
07/22/02	16:30:05	86.710
07/22/02	16:31:05	85.373
07/22/02	16:32:05	87.136
07/22/02	16:33:05	85.203
07/22/02	16:34:05	85.117
07/22/02	16:35:05	86.027
07/22/02	16:36:05	88.587
07/22/02	16:37:05	86.198
07/22/02	16:38:05	84.435
07/22/02	16:39:05	84.435
07/22/02	16:40:05	85.373
07/22/02	16:41:05	84.435
07/22/02	16:42:05	86.966
07/22/02	16:43:05	87.563

CHEATHAM AND MCGHEHEE - NO. 7490 cont.

Date	Time	Pres (PSI)
07/22/02	16:44:05	85.288
07/22/02	16:45:05	85.032
07/22/02	16:46:05	87.563
07/22/02	16:47:05	86.369
07/22/02	16:48:05	86.454
07/22/02	16:49:05	85.458
07/22/02	16:50:05	85.629
07/22/02	16:51:05	86.710
07/22/02	16:52:05	86.027
07/22/02	16:53:05	85.714
07/22/02	16:54:05	86.795
07/22/02	16:55:05	85.544
07/22/02	16:56:05	85.544
07/22/02	16:57:05	86.027
07/22/02	16:58:05	85.458
07/22/02	16:59:05	85.458
07/22/02	17:00:05	84.179
07/22/02	17:01:05	85.032
07/22/02	17:02:05	84.947
07/22/02	17:03:05	85.458
07/22/02	17:04:05	82.899
07/22/02	17:05:05	84.691
07/22/02	17:06:05	85.885
07/22/02	17:07:05	84.520
07/22/02	17:08:05	84.947
07/22/02	17:09:05	84.691
07/22/02	17:10:05	85.800
07/22/02	17:11:05	86.027
07/22/02	17:12:05	86.454
07/22/02	17:13:05	86.198
07/22/02	17:14:05	84.349
07/22/02	17:15:05	84.947
07/22/02	17:16:05	85.373
07/22/02	17:17:05	83.411
07/22/02	17:18:05	85.544
07/22/02	17:19:05	86.198
07/22/02	17:20:05	85.373
07/22/02	17:21:05	85.458
07/22/02	17:22:05	84.947
07/22/02	17:23:05	87.563
07/22/02	17:24:05	87.136
07/22/02	17:25:05	85.373
07/22/02	17:26:05	86.539
07/22/02	17:27:05	86.454
07/22/02	17:28:05	87.136
07/22/02	17:29:05	85.800
07/22/02	17:30:05	86.454
07/22/02	17:31:05	86.454
07/22/02	17:32:05	85.942
07/22/02	17:33:05	85.288
07/22/02	17:34:05	86.710
07/22/02	17:35:05	83.752
07/22/02	17:36:05	86.539
07/22/02	17:37:05	85.800
07/22/02	17:38:05	85.544
07/22/02	17:39:05	86.283
07/22/02	17:40:05	85.117
07/22/02	17:41:05	83.240
07/22/02	17:42:05	86.283
07/22/02	17:43:05	84.093
07/22/02	17:44:05	83.752
07/22/02	17:45:05	84.093
07/22/02	17:46:05	84.861
07/22/02	17:47:05	84.008
07/22/02	17:48:05	86.539
07/22/02	17:49:05	83.752
07/22/02	17:50:05	83.923
07/22/02	17:51:05	87.904
07/22/02	17:52:05	85.032
07/22/02	17:53:05	80.681
07/22/02	17:54:05	82.131
07/22/02	17:55:05	83.411
07/22/02	17:56:05	84.520
07/22/02	17:57:05	86.369
07/22/02	17:58:05	85.203
07/22/02	17:59:05	83.837
07/22/02	18:00:05	83.411
07/22/02	18:01:05	83.582
07/22/02	18:02:05	83.667
07/22/02	18:03:05	81.961
07/22/02	18:04:05	83.240
07/22/02	18:05:05	84.435
07/22/02	18:06:05	84.008
07/22/02	18:07:05	84.008
07/22/02	18:08:05	85.032
07/22/02	18:09:05	86.113
07/22/02	18:10:05	82.814
07/22/02	18:11:05	84.605
07/22/02	18:12:05	84.008
07/22/02	18:13:05	83.667
07/22/02	18:14:05	83.326
07/22/02	18:15:05	84.520
07/22/02	18:16:05	85.458
07/22/02	18:17:05	85.373
07/22/02	18:18:05	86.966
07/22/02	18:19:05	85.629
07/22/02	18:20:05	84.691
07/22/02	18:21:05	85.288
07/22/02	18:22:05	85.458
07/22/02	18:23:05	84.605
07/22/02	18:24:05	86.710
07/22/02	18:25:05	84.861
07/22/02	18:26:05	85.714
07/22/02	18:27:05	84.349
07/22/02	18:28:05	83.752
07/22/02	18:29:05	85.458
07/22/02	18:30:05	85.544
07/22/02	18:31:05	85.885
07/22/02	18:32:05	85.288
07/22/02	18:33:05	84.947
07/22/02	18:34:05	84.605
07/22/02	18:35:05	85.373
07/22/02	18:36:05	85.288
07/22/02	18:37:05	67.371
07/22/02	18:38:05	72.206
07/22/02	18:39:05	70.073
07/22/02	18:40:05	70.158
07/22/02	18:41:05	71.097
07/22/02	18:42:05	80.681
07/22/02	18:43:05	87.222
07/22/02	18:44:05	84.264
07/22/02	18:45:05	84.947
07/22/02	18:46:05	84.520
07/22/02	18:47:05	86.113
07/22/02	18:48:05	81.875
07/22/02	18:49:05	80.851
07/22/02	18:50:05	83.070
07/22/02	18:51:05	83.582
07/22/02	18:52:05	83.411
07/22/02	18:53:05	81.534
07/22/02	18:54:05	82.814
07/22/02	18:55:05	82.899
07/22/02	18:56:05	84.008
07/22/02	18:57:05	83.667
07/22/02	18:58:05	81.278
07/22/02	18:59:05	84.008
07/22/02	19:00:05	81.193
07/22/02	19:01:05	82.728
07/22/02	19:02:05	82.558
07/22/02	19:03:05	80.027
07/22/02	19:04:05	82.814
07/22/02	19:05:05	82.131
07/22/02	19:06:05	81.449
07/22/02	19:07:05	83.155
07/22/02	19:08:05	81.022
07/22/02	19:09:05	83.240
07/22/02	19:10:05	82.472
07/22/02	19:11:05	81.534
07/22/02	19:12:05	89.696
07/22/02	19:13:05	82.984
07/22/02	19:14:05	86.710
07/22/02	19:15:05	84.520
07/22/02	19:16:05	85.032
07/22/02	19:17:05	85.800
07/22/02	19:18:05	83.240
07/22/02	19:19:05	85.117
07/22/02	19:20:05	85.800
07/22/02	19:21:05	84.947
07/22/02	19:22:05	85.714
07/22/02	19:23:05	85.373
07/22/02	19:24:05	84.947
07/22/02	19:25:05	84.861
07/22/02	19:26:05	85.458
07/22/02	19:27:05	85.629
07/22/02	19:28:05	85.032
07/22/02	19:29:05	85.373
07/22/02	19:30:05	84.947
07/22/02	19:31:05	85.629
07/22/02	19:32:05	85.942
07/22/02	19:33:05	84.861
07/22/02	19:34:05	85.288
07/22/02	19:35:05	83.752
07/22/02	19:36:05	87.734
07/22/02	19:37:05	85.800
07/22/02	19:38:05	84.264
07/22/02	19:39:05	86.198
07/22/02	19:40:05	85.458
07/22/02	19:41:05	85.942
07/22/02	19:42:05	83.923
07/22/02	19:43:05	85.714
07/22/02	19:44:05	84.520
07/22/02	19:45:05	85.288
07/22/02	19:46:05	85.800
07/22/02	19:47:05	85.458
07/22/02	19:48:05	86.283
07/22/02	19:49:05	86.198
07/22/02	19:50:05	86.369
07/22/02	19:51:05	87.563
07/22/02	19:52:05	86.283
07/22/02	19:53:05	84.349
07/22/02	19:54:05	85.288
07/22/02	19:55:05	86.454
07/22/02	19:56:05	85.373
07/22/02	19:57:05	85.800
07/22/02	19:58:05	84.520
07/22/02	19:59:05	85.629
07/22/02	20:00:05	85.032
07/22/02	20:01:05	86.369
07/22/02	20:02:05	84.776
07/22/02	20:03:05	85.714
07/22/02	20:04:05	86.369
07/22/02	20:05:05	83.923
07/22/02	20:06:05	86.795
07/22/02	20:07:05	84.691
07/22/02	20:08:05	86.795
07/22/02	20:09:05	84.691
07/22/02	20:10:05	84.264
07/22/02	20:11:05	86.369
07/22/02	20:12:05	86.454
07/22/02	20:13:05	84.691
07/22/02	20:14:05	85.288
07/22/02	20:15:05	84.179
07/22/02	20:16:05	84.947
07/22/02	20:17:05	85.288
07/22/02	20:18:05	84.947
07/22/02	20:19:05	86.198
07/22/02	20:20:05	85.203
07/22/02	20:21:05	85.373
07/22/02	20:22:05	85.544
07/22/02	20:23:05	86.027
07/22/02	20:24:05	84.605
07/22/02	20:25:05	85.800
07/22/02	20:26:05	86.454
07/22/02	20:27:05	86.454
07/22/02	20:28:05	85.714
07/22/02	20:29:05	86.283
07/22/02	20:30:05	85.885
07/22/02	20:31:05	86.880
07/22/02	20:32:05	85.800
07/22/02	20:33:05	85.714
07/22/02	20:34:05	86.113
07/22/02	20:35:05	85.885
07/22/02	20:36:05	85.288
07/22/02	20:37:05	85.373
07/22/02	20:38:05	84.861
07/22/02	20:39:05	86.113
07/22/02	20:40:05	85.117
07/22/02	20:41:05	86.966
07/22/02	20:42:05	85.800
07/22/02	20:43:05	85.373
07/22/02	20:44:05	86.454
07/22/02	20:45:05	87.904
07/22/02	20:46:05	85.800
07/22/02	20:47:05	84.520
07/22/02	20:48:05	86.710
07/22/02	20:49:05	85.288
07/22/02	20:50:05	85.373
07/22/02	20:51:05	85.942
07/22/02	20:52:05	86.027
07/22/02	20:53:05	86.795
07/22/02	20:54:05	85.942
07/22/02	20:55:05	88.160
07/22/02	20:56:05	88.416
07/22/02	20:57:05	86.966
07/22/02	20:58:05	88.075
07/22/02	20:59:05	87.051
07/22/02	21:00:05	86.283
07/22/02	21:01:05	86.880
07/22/02	21:02:05	86.283
07/22/02	21:03:05	86.880
07/22/02	21:04:05	85.203
07/22/02	21:05:05	85.629
07/22/02	21:06:05	87.222
07/22/02	21:07:05	85.203

CHEATHAM AND MCGHEHEE - NO. 7490 cont.

Date	Time	Pres (PSI)
07/22/02	21:08:05	86.027
07/22/02	21:09:05	85.032
07/22/02	21:10:05	85.544
07/22/02	21:11:05	86.283
07/22/02	21:12:05	86.113
07/22/02	21:13:05	85.885
07/22/02	21:14:05	85.544
07/22/02	21:15:05	85.942
07/22/02	21:16:05	86.795
07/22/02	21:17:05	86.027
07/22/02	21:18:05	85.885
07/22/02	21:19:05	87.563
07/22/02	21:20:05	85.629
07/22/02	21:21:05	87.563
07/22/02	21:22:05	86.795
07/22/02	21:23:05	87.051
07/22/02	21:24:05	87.819
07/22/02	21:25:05	87.051
07/22/02	21:26:05	86.966
07/22/02	21:27:05	86.539
07/22/02	21:28:05	86.369
07/22/02	21:29:05	85.117
07/22/02	21:30:05	86.369
07/22/02	21:31:05	86.966
07/22/02	21:32:05	86.027
07/22/02	21:33:05	85.800
07/22/02	21:34:05	86.539
07/22/02	21:35:05	87.478
07/22/02	21:36:05	86.710
07/22/02	21:37:05	87.478
07/22/02	21:38:05	87.734
07/22/02	21:39:05	85.800
07/22/02	21:40:05	86.283
07/22/02	21:41:05	86.624
07/22/02	21:42:05	88.075
07/22/02	21:43:05	87.990
07/22/02	21:44:05	87.904
07/22/02	21:45:05	87.307
07/22/02	21:46:05	87.563
07/22/02	21:47:05	87.990
07/22/02	21:48:05	86.369
07/22/02	21:49:05	87.648
07/22/02	21:50:05	88.416
07/22/02	21:51:05	88.843
07/22/02	21:52:05	88.843
07/22/02	21:53:05	88.416
07/22/02	21:54:05	88.587
07/22/02	21:55:05	89.184
07/22/02	21:56:05	87.648
07/22/02	21:57:05	88.075
07/22/02	21:58:05	89.355
07/22/02	21:59:05	89.611
07/22/02	22:00:05	89.269
07/22/02	22:01:05	89.013
07/22/02	22:02:05	86.283
07/22/02	22:03:05	86.027
07/22/02	22:04:05	87.648
07/22/02	22:05:05	87.478
07/22/02	22:06:05	87.904
07/22/02	22:07:05	72.377
07/22/02	22:08:05	71.182
07/22/02	22:09:05	78.832
07/22/02	22:10:05	87.307
07/22/02	22:11:05	85.629
07/22/02	22:12:05	85.288
07/22/02	22:13:05	85.885
07/22/02	22:14:05	85.117
07/22/02	22:15:05	86.198
07/22/02	22:16:05	85.629
07/22/02	22:17:05	86.113
07/22/02	22:18:05	86.027
07/22/02	22:19:05	85.373
07/22/02	22:20:05	90.890
07/22/02	22:21:05	88.331
07/22/02	22:22:05	86.454
07/22/02	22:23:05	86.795
07/22/02	22:24:05	87.563
07/22/02	22:25:05	87.819
07/22/02	22:26:05	86.966
07/22/02	22:27:05	86.880
07/22/02	22:28:05	88.672
07/22/02	22:29:05	88.331
07/22/02	22:30:05	89.184
07/22/02	22:31:05	88.245
07/22/02	22:32:05	88.757
07/22/02	22:33:05	88.160
07/22/02	22:34:05	87.563
07/22/02	22:35:05	88.672
07/22/02	22:36:05	89.355
07/22/02	22:37:05	90.208
07/22/02	22:38:05	87.563
07/22/02	22:39:05	89.611
07/22/02	22:40:05	89.184
07/22/02	22:41:05	90.378
07/22/02	22:42:05	89.696
07/22/02	22:43:05	90.208
07/22/02	22:44:05	89.355
07/22/02	22:45:05	89.696
07/22/02	22:46:05	89.525
07/22/02	22:47:05	90.037
07/22/02	22:48:05	90.037
07/22/02	22:49:05	90.293
07/22/02	22:50:05	90.122
07/22/02	22:51:05	89.952
07/22/02	22:52:05	89.013
07/22/02	22:53:05	90.976
07/22/02	22:54:05	89.781
07/22/02	22:55:05	76.102
07/22/02	22:56:05	77.041
07/22/02	22:57:05	79.174
07/22/02	22:58:05	76.443
07/22/02	22:59:05	76.443
07/22/02	23:00:05	80.595
07/22/02	23:01:05	88.331
07/22/02	23:02:05	86.880
07/22/02	23:03:05	86.966
07/22/02	23:04:05	87.307
07/22/02	23:05:05	87.478
07/22/02	23:06:05	87.136
07/22/02	23:07:05	86.454
07/22/02	23:08:05	86.539
07/22/02	23:09:05	87.222
07/22/02	23:10:05	86.795
07/22/02	23:11:05	86.795
07/22/02	23:12:05	87.478
07/22/02	23:13:05	86.795
07/22/02	23:14:05	88.075
07/22/02	23:15:05	87.051
07/22/02	23:16:05	87.222
07/22/02	23:17:05	88.075
07/22/02	23:18:05	86.966
07/22/02	23:19:05	87.990
07/22/02	23:20:05	87.904
07/22/02	23:21:05	86.624
07/22/02	23:22:05	87.648
07/22/02	23:23:05	86.113
07/22/02	23:24:05	87.222
07/22/02	23:25:05	86.966
07/22/02	23:26:05	87.051
07/22/02	23:27:05	87.478
07/22/02	23:28:05	87.307
07/22/02	23:29:05	87.904
07/22/02	23:30:05	88.672
07/22/02	23:31:05	87.392
07/22/02	23:32:05	88.843
07/22/02	23:33:05	87.222
07/22/02	23:34:05	87.307
07/22/02	23:35:05	87.051
07/22/02	23:36:05	87.136
07/22/02	23:37:05	91.971
07/22/02	23:38:05	90.549
07/22/02	23:39:05	89.269
07/22/02	23:40:05	90.293
07/22/02	23:41:05	90.464
07/22/02	23:42:05	89.696
07/22/02	23:43:05	91.146
07/22/02	23:44:05	90.720
07/22/02	23:45:05	89.525
07/22/02	23:46:05	90.037
07/22/02	23:47:05	90.464
07/22/02	23:48:05	89.611
07/22/02	23:49:05	91.232
07/22/02	23:50:05	90.720
07/22/02	23:51:05	90.805
07/22/02	23:52:05	91.715
07/22/02	23:53:05	92.056
07/22/02	23:54:05	90.122
07/22/02	23:55:05	90.720
07/22/02	23:56:05	91.715
07/22/02	23:57:05	90.122
07/22/02	23:58:05	91.374
07/22/02	23:59:05	91.459
07/23/02	00:00:05	91.146
07/23/02	00:01:05	91.544
07/23/02	00:02:05	90.464
07/23/02	00:03:05	91.288
07/23/02	00:04:05	90.720
07/23/02	00:05:05	91.886
07/23/02	00:06:05	91.544
07/23/02	00:07:05	90.293
07/23/02	00:08:05	90.805
07/23/02	00:09:05	91.146
07/23/02	00:10:05	90.805
07/23/02	00:11:05	91.630
07/23/02	00:12:05	93.251
07/23/02	00:13:05	93.507
07/23/02	00:14:05	92.653
07/23/02	00:15:05	92.142
07/23/02	00:16:05	93.763
07/23/02	00:17:05	92.568
07/23/02	00:18:05	93.336
07/23/02	00:19:05	93.507
07/23/02	00:20:05	93.080
07/23/02	00:21:05	92.824
07/23/02	00:22:05	92.142
07/23/02	00:23:05	93.507
07/23/02	00:24:05	92.739
07/23/02	00:25:05	93.421
07/23/02	00:26:05	93.336
07/23/02	00:27:05	92.995
07/23/02	00:28:05	92.995
07/23/02	00:29:05	93.080
07/23/02	00:30:05	92.142
07/23/02	00:31:05	93.165
07/23/02	00:32:05	93.251
07/23/02	00:33:05	93.848
07/23/02	00:34:05	92.739
07/23/02	00:35:05	92.824
07/23/02	00:36:05	92.398
07/23/02	00:37:05	92.398
07/23/02	00:38:05	93.336
07/23/02	00:39:05	92.909
07/23/02	00:40:05	93.421
07/23/02	00:41:05	93.507
07/23/02	00:42:05	93.080
07/23/02	00:43:05	93.336
07/23/02	00:44:05	92.909
07/23/02	00:45:05	92.398
07/23/02	00:46:05	93.677
07/23/02	00:47:05	93.080
07/23/02	00:48:05	94.104
07/23/02	00:49:05	93.336
07/23/02	00:50:05	93.677
07/23/02	00:51:05	93.677
07/23/02	00:52:05	92.739
07/23/02	00:53:05	93.677
07/23/02	00:54:05	93.165
07/23/02	00:55:05	93.592
07/23/02	00:56:05	93.763
07/23/02	00:57:05	92.909
07/23/02	00:58:05	93.165
07/23/02	00:59:05	93.848
07/23/02	01:00:05	93.080
07/23/02	01:01:05	92.824
07/23/02	01:02:05	93.080
07/23/02	01:03:05	93.848
07/23/02	01:04:05	92.909
07/23/02	01:05:05	93.421
07/23/02	01:06:05	92.995
07/23/02	01:07:05	93.507
07/23/02	01:08:05	92.653
07/23/02	01:09:05	93.421
07/23/02	01:10:05	93.251
07/23/02	01:11:05	92.568
07/23/02	01:12:05	82.302
07/23/02	01:13:05	86.283
07/23/02	01:14:05	88.416
07/23/02	01:15:05	93.933
07/23/02	01:16:05	92.995
07/23/02	01:17:05	92.312
07/23/02	01:18:05	93.165
07/23/02	01:19:05	92.909
07/23/02	01:20:05	93.080
07/23/02	01:21:05	92.398
07/23/02	01:22:05	93.165
07/23/02	01:23:05	93.080
07/23/02	01:24:05	93.421
07/23/02	01:25:05	93.421
07/23/02	01:26:05	93.251
07/23/02	01:27:05	92.909
07/23/02	01:28:05	93.080
07/23/02	01:29:05	92.568
07/23/02	01:30:05	93.763
07/23/02	01:31:05	93.336

CHEATHAM AND MCGHEHEE - NO. 7490 cont.

Date Time	Pres (PSI)	Date Time	Pres (PSI)	Date Time	Pres (PSI)	Date Time	Pres (PSI)
07/23/02 01:32:05	92.483	07/23/02 02:38:05	94.189	07/23/02 03:44:05	93.421	07/23/02 04:50:05	93.421
07/23/02 01:33:05	92.312	07/23/02 02:39:05	94.104	07/23/02 03:45:05	93.848	07/23/02 04:51:05	93.336
07/23/02 01:34:05	93.251	07/23/02 02:40:05	93.165	07/23/02 03:46:05	93.421	07/23/02 04:52:05	93.848
07/23/02 01:35:05	93.421	07/23/02 02:41:05	93.848	07/23/02 03:47:05	93.677	07/23/02 04:53:05	92.995
07/23/02 01:36:05	93.165	07/23/02 02:42:05	93.165	07/23/02 03:48:05	92.995	07/23/02 04:54:05	93.507
07/23/02 01:37:05	93.165	07/23/02 02:43:05	93.165	07/23/02 03:49:05	93.677	07/23/02 04:55:05	92.824
07/23/02 01:38:05	93.421	07/23/02 02:44:05	92.739	07/23/02 03:50:05	93.251	07/23/02 04:56:05	93.677
07/23/02 01:39:05	93.251	07/23/02 02:45:05	93.507	07/23/02 03:51:05	93.677	07/23/02 04:57:05	92.824
07/23/02 01:40:05	92.909	07/23/02 02:46:05	93.336	07/23/02 03:52:05	93.848	07/23/02 04:58:05	93.251
07/23/02 01:41:05	93.336	07/23/02 02:47:05	92.824	07/23/02 03:53:05	92.398	07/23/02 04:59:05	93.336
07/23/02 01:42:05	94.019	07/23/02 02:48:05	93.080	07/23/02 03:54:05	93.507	07/23/02 05:00:05	84.691
07/23/02 01:43:05	93.507	07/23/02 02:49:05	93.165	07/23/02 03:55:05	93.677	07/23/02 05:01:05	89.269
07/23/02 01:44:05	93.848	07/23/02 02:50:05	94.189	07/23/02 03:56:05	93.592	07/23/02 05:02:05	90.976
07/23/02 01:45:05	93.763	07/23/02 02:51:05	92.653	07/23/02 03:57:05	93.507	07/23/02 05:03:05	90.634
07/23/02 01:46:05	93.592	07/23/02 02:52:05	94.104	07/23/02 03:58:05	93.080	07/23/02 05:04:05	89.781
07/23/02 01:47:05	93.507	07/23/02 02:53:05	93.677	07/23/02 03:59:05	93.677	07/23/02 05:05:05	90.208
07/23/02 01:48:05	94.104	07/23/02 02:54:05	93.080	07/23/02 04:00:05	92.653	07/23/02 05:06:05	89.696
07/23/02 01:49:05	94.019	07/23/02 02:55:05	93.336	07/23/02 04:01:05	93.507	07/23/02 05:07:05	88.501
07/23/02 01:50:05	94.360	07/23/02 02:56:05	93.165	07/23/02 04:02:05	93.336	07/23/02 05:08:05	89.440
07/23/02 01:51:05	94.530	07/23/02 02:57:05	93.165	07/23/02 04:03:05	93.165	07/23/02 05:09:05	88.672
07/23/02 01:52:05	93.592	07/23/02 02:58:05	93.336	07/23/02 04:04:05	93.421	07/23/02 05:10:05	88.928
07/23/02 01:53:05	93.848	07/23/02 02:59:05	92.995	07/23/02 04:05:05	93.592	07/23/02 05:11:05	88.331
07/23/02 01:54:05	94.616	07/23/02 03:00:05	93.421	07/23/02 04:06:05	93.336	07/23/02 05:12:05	87.990
07/23/02 01:55:05	94.530	07/23/02 03:01:05	93.336	07/23/02 04:07:05	93.251	07/23/02 05:13:05	88.672
07/23/02 01:56:05	94.360	07/23/02 03:02:05	93.592	07/23/02 04:08:05	93.763	07/23/02 05:14:05	88.160
07/23/02 01:57:05	94.274	07/23/02 03:03:05	92.995	07/23/02 04:09:05	93.421	07/23/02 05:15:05	88.331
07/23/02 01:58:05	94.189	07/23/02 03:04:05	92.824	07/23/02 04:10:05	93.165	07/23/02 05:16:05	88.245
07/23/02 01:59:05	93.507	07/23/02 03:05:05	92.909	07/23/02 04:11:05	93.763	07/23/02 05:17:05	88.331
07/23/02 02:00:05	93.507	07/23/02 03:06:05	92.909	07/23/02 04:12:05	92.995	07/23/02 05:18:05	88.331
07/23/02 02:01:05	93.933	07/23/02 03:07:05	93.251	07/23/02 04:13:05	93.080	07/23/02 05:19:05	88.501
07/23/02 02:02:05	93.592	07/23/02 03:08:05	93.251	07/23/02 04:14:05	93.251	07/23/02 05:20:05	88.587
07/23/02 02:03:05	93.592	07/23/02 03:09:05	92.824	07/23/02 04:15:05	93.251	07/23/02 05:21:05	88.331
07/23/02 02:04:05	93.933	07/23/02 03:10:05	93.848	07/23/02 04:16:05	93.080	07/23/02 05:22:05	88.587
07/23/02 02:05:05	93.848	07/23/02 03:11:05	93.933	07/23/02 04:17:05	93.592	07/23/02 05:23:05	87.904
07/23/02 02:06:05	94.189	07/23/02 03:12:05	93.421	07/23/02 04:18:05	93.677	07/23/02 05:24:05	88.075
07/23/02 02:07:05	93.677	07/23/02 03:13:05	93.677	07/23/02 04:19:05	93.421	07/23/02 05:25:05	87.734
07/23/02 02:08:05	93.336	07/23/02 03:14:05	93.933	07/23/02 04:20:05	93.592	07/23/02 05:26:05	87.904
07/23/02 02:09:05	93.763	07/23/02 03:15:05	93.763	07/23/02 04:21:05	93.677	07/23/02 05:27:05	86.624
07/23/02 02:10:05	93.336	07/23/02 03:16:05	93.336	07/23/02 04:22:05	93.336	07/23/02 05:28:05	86.198
07/23/02 02:11:05	93.251	07/23/02 03:17:05	93.165	07/23/02 04:23:05	92.824	07/23/02 05:29:05	86.454
07/23/02 02:12:05	93.507	07/23/02 03:18:05	93.421	07/23/02 04:24:05	93.763	07/23/02 05:30:05	87.392
07/23/02 02:13:05	93.165	07/23/02 03:19:05	93.336	07/23/02 04:25:05	93.933	07/23/02 05:31:05	86.880
07/23/02 02:14:05	93.165	07/23/02 03:20:05	93.763	07/23/02 04:26:05	93.763	07/23/02 05:32:05	85.714
07/23/02 02:15:05	93.763	07/23/02 03:21:05	92.824	07/23/02 04:27:05	93.080	07/23/02 05:33:05	86.283
07/23/02 02:16:05	93.421	07/23/02 03:22:05	93.336	07/23/02 04:28:05	93.592	07/23/02 05:34:05	86.624
07/23/02 02:17:05	93.848	07/23/02 03:23:05	92.909	07/23/02 04:29:05	93.592	07/23/02 05:35:05	86.369
07/23/02 02:18:05	93.165	07/23/02 03:24:05	93.507	07/23/02 04:30:05	92.142	07/23/02 05:36:05	85.800
07/23/02 02:19:05	93.677	07/23/02 03:25:05	96.151	07/23/02 04:31:05	93.251	07/23/02 05:37:05	86.113
07/23/02 02:20:05	94.530	07/23/02 03:26:05	91.800	07/23/02 04:32:05	92.227	07/23/02 05:38:05	84.861
07/23/02 02:21:05	93.336	07/23/02 03:27:05	93.933	07/23/02 04:33:05	93.336	07/23/02 05:39:05	84.861
07/23/02 02:22:05	94.019	07/23/02 03:28:05	93.507	07/23/02 04:34:05	92.483	07/23/02 05:40:05	84.264
07/23/02 02:23:05	94.530	07/23/02 03:29:05	93.080	07/23/02 04:35:05	94.104	07/23/02 05:41:05	85.373
07/23/02 02:24:05	93.933	07/23/02 03:30:05	94.019	07/23/02 04:36:05	92.909	07/23/02 05:42:05	85.117
07/23/02 02:25:05	93.763	07/23/02 03:31:05	93.507	07/23/02 04:37:05	93.592	07/23/02 05:43:05	83.752
07/23/02 02:26:05	93.848	07/23/02 03:32:05	94.189	07/23/02 04:38:05	93.421	07/23/02 05:44:05	83.582
07/23/02 02:27:05	93.165	07/23/02 03:33:05	93.507	07/23/02 04:39:05	93.080	07/23/02 05:45:05	83.923
07/23/02 02:28:05	93.848	07/23/02 03:34:05	94.274	07/23/02 04:40:05	93.677	07/23/02 05:46:05	83.411
07/23/02 02:29:05	93.080	07/23/02 03:35:05	94.104	07/23/02 04:41:05	93.080	07/23/02 05:47:05	82.728
07/23/02 02:30:05	93.933	07/23/02 03:36:05	94.104	07/23/02 04:42:05	93.763	07/23/02 05:48:05	82.131
07/23/02 02:31:05	93.080	07/23/02 03:37:05	94.530	07/23/02 04:43:05	94.189	07/23/02 05:49:05	80.851
07/23/02 02:32:05	93.677	07/23/02 03:38:05	93.592	07/23/02 04:44:05	93.763	07/23/02 05:50:05	81.619
07/23/02 02:33:05	93.251	07/23/02 03:39:05	94.104	07/23/02 04:45:05	93.251	07/23/02 05:51:05	96.237
07/23/02 02:34:05	93.763	07/23/02 03:40:05	93.763	07/23/02 04:46:05	93.080	07/23/02 05:52:05	91.288
07/23/02 02:35:05	93.251	07/23/02 03:41:05	94.104	07/23/02 04:47:05	93.507	07/23/02 05:53:05	91.374
07/23/02 02:36:05	93.592	07/23/02 03:42:05	93.251	07/23/02 04:48:05	92.739	07/23/02 05:54:05	92.142
07/23/02 02:37:05	93.421	07/23/02 03:43:05	93.677	07/23/02 04:49:05	93.933	07/23/02 05:55:05	91.374

CHEATHAM AND MCGHEHEE - NO. 7490 cont.

Date Time	Pres (PSI)	Date Time	Pres (PSI)	Date Time	Pres (PSI)	Date Time	Pres (PSI)
07/23/02 05:56:05	92.312	07/23/02 07:02:05	87.478	07/23/02 08:08:05	85.458	07/23/02 09:14:05	77.382
07/23/02 05:57:05	92.056	07/23/02 07:03:05	86.795	07/23/02 08:09:05	85.942	07/23/02 09:15:05	80.112
07/23/02 05:58:05	91.544	07/23/02 07:04:05	88.245	07/23/02 08:10:05	84.179	07/23/02 09:16:05	78.150
07/23/02 05:59:05	91.374	07/23/02 07:05:05	86.880	07/23/02 08:11:05	90.122	07/23/02 09:17:05	76.955
07/23/02 06:00:05	91.544	07/23/02 07:06:05	86.624	07/23/02 08:12:05	90.037	07/23/02 09:18:05	77.211
07/23/02 06:01:05	91.232	07/23/02 07:07:05	87.307	07/23/02 08:13:05	88.928	07/23/02 09:19:05	77.041
07/23/02 06:02:05	91.061	07/23/02 07:08:05	87.819	07/23/02 08:14:05	89.866	07/23/02 09:20:05	77.979
07/23/02 06:03:05	90.976	07/23/02 07:09:05	86.027	07/23/02 08:15:05	89.866	07/23/02 09:21:05	73.912
07/23/02 06:04:05	91.630	07/23/02 07:10:05	85.800	07/23/02 08:16:05	90.805	07/23/02 09:22:05	77.808
07/23/02 06:05:05	91.146	07/23/02 07:11:05	86.795	07/23/02 08:17:05	89.781	07/23/02 09:23:05	78.662
07/23/02 06:06:05	90.293	07/23/02 07:12:05	86.966	07/23/02 08:18:05	87.990	07/23/02 09:24:05	78.576
07/23/02 06:07:05	90.378	07/23/02 07:13:05	85.288	07/23/02 08:19:05	88.416	07/23/02 09:25:05	80.851
07/23/02 06:08:05	91.146	07/23/02 07:14:05	85.714	07/23/02 08:20:05	90.208	07/23/02 09:26:05	85.885
07/23/02 06:09:05	91.146	07/23/02 07:15:05	85.203	07/23/02 08:21:05	88.416	07/23/02 09:27:05	87.222
07/23/02 06:10:05	90.805	07/23/02 07:16:05	84.008	07/23/02 08:22:05	90.805	07/23/02 09:28:05	87.563
07/23/02 06:11:05	90.037	07/23/02 07:17:05	84.520	07/23/02 08:23:05	89.099	07/23/02 09:29:05	86.966
07/23/02 06:12:05	90.293	07/23/02 07:18:05	84.349	07/23/02 08:24:05	88.075	07/23/02 09:30:05	87.051
07/23/02 06:13:05	90.122	07/23/02 07:19:05	84.691	07/23/02 08:25:05	90.122	07/23/02 09:31:05	86.027
07/23/02 06:14:05	90.293	07/23/02 07:20:05	84.605	07/23/02 08:26:05	89.866	07/23/02 09:32:05	86.454
07/23/02 06:15:05	89.611	07/23/02 07:21:05	85.800	07/23/02 08:27:05	87.904	07/23/02 09:33:05	85.288
07/23/02 06:16:05	90.122	07/23/02 07:22:05	85.800	07/23/02 08:28:05	88.672	07/23/02 09:34:05	84.947
07/23/02 06:17:05	90.037	07/23/02 07:23:05	87.051	07/23/02 08:29:05	88.331	07/23/02 09:35:05	85.714
07/23/02 06:18:05	90.890	07/23/02 07:24:05	85.714	07/23/02 08:30:05	87.222	07/23/02 09:36:05	84.349
07/23/02 06:19:05	90.037	07/23/02 07:25:05	86.966	07/23/02 08:31:05	89.184	07/23/02 09:37:05	85.800
07/23/02 06:20:05	91.146	07/23/02 07:26:05	85.942	07/23/02 08:32:05	89.099	07/23/02 09:38:05	87.990
07/23/02 06:21:05	89.184	07/23/02 07:27:05	86.795	07/23/02 08:33:05	88.331	07/23/02 09:39:05	85.373
07/23/02 06:22:05	89.781	07/23/02 07:28:05	84.179	07/23/02 08:34:05	89.696	07/23/02 09:40:05	86.624
07/23/02 06:23:05	88.928	07/23/02 07:29:05	86.624	07/23/02 08:35:05	89.269	07/23/02 09:41:05	86.539
07/23/02 06:24:05	90.378	07/23/02 07:30:05	87.648	07/23/02 08:36:05	88.245	07/23/02 09:42:05	85.203
07/23/02 06:25:05	89.440	07/23/02 07:31:05	85.458	07/23/02 08:37:05	87.819	07/23/02 09:43:05	87.648
07/23/02 06:26:05	75.420	07/23/02 07:32:05	85.373	07/23/02 08:38:05	88.501	07/23/02 09:44:05	86.539
07/23/02 06:27:05	80.453	07/23/02 07:33:05	85.203	07/23/02 08:39:05	88.928	07/23/02 09:45:05	86.880
07/23/02 06:28:05	89.099	07/23/02 07:34:05	86.624	07/23/02 08:40:05	88.160	07/23/02 09:46:05	86.966
07/23/02 06:29:05	89.866	07/23/02 07:35:05	86.795	07/23/02 08:41:05	86.880	07/23/02 09:47:05	87.392
07/23/02 06:30:05	88.928	07/23/02 07:36:05	86.624	07/23/02 08:42:05	87.648	07/23/02 09:48:05	85.714
07/23/02 06:31:05	88.757	07/23/02 07:37:05	86.369	07/23/02 08:43:05	89.184	07/23/02 09:49:05	87.563
07/23/02 06:32:05	89.099	07/23/02 07:38:05	86.795	07/23/02 08:44:05	89.781	07/23/02 09:50:05	87.478
07/23/02 06:33:05	89.440	07/23/02 07:39:05	87.307	07/23/02 08:45:05	83.752	07/23/02 09:51:05	87.819
07/23/02 06:34:05	88.075	07/23/02 07:40:05	92.312	07/23/02 08:46:05	83.326	07/23/02 09:52:05	88.160
07/23/02 06:35:05	89.611	07/23/02 07:41:05	87.819	07/23/02 08:47:05	85.203	07/23/02 09:53:05	88.160
07/23/02 06:36:05	88.416	07/23/02 07:42:05	87.734	07/23/02 08:48:05	84.776	07/23/02 09:54:05	87.648
07/23/02 06:37:05	87.990	07/23/02 07:43:05	88.928	07/23/02 08:49:05	85.203	07/23/02 09:55:05	85.373
07/23/02 06:38:05	88.416	07/23/02 07:44:05	88.160	07/23/02 08:50:05	85.942	07/23/02 09:56:05	81.619
07/23/02 06:39:05	89.355	07/23/02 07:45:05	87.734	07/23/02 08:51:05	86.198	07/23/02 09:57:05	81.961
07/23/02 06:40:05	90.378	07/23/02 07:46:05	87.990	07/23/02 08:52:05	87.051	07/23/02 09:58:05	80.851
07/23/02 06:41:05	87.648	07/23/02 07:47:05	87.307	07/23/02 08:53:05	86.624	07/23/02 09:59:05	80.937
07/23/02 06:42:05	87.990	07/23/02 07:48:05	87.904	07/23/02 08:54:05	86.710	07/23/02 10:00:05	82.643
07/23/02 06:43:05	89.013	07/23/02 07:49:05	89.013	07/23/02 08:55:05	85.544	07/23/02 10:01:05	80.681
07/23/02 06:44:05	87.819	07/23/02 07:50:05	88.587	07/23/02 08:56:05	87.819	07/23/02 10:02:05	81.705
07/23/02 06:45:05	88.075	07/23/02 07:51:05	87.734	07/23/02 08:57:05	86.624	07/23/02 10:03:05	81.790
07/23/02 06:46:05	88.672	07/23/02 07:52:05	88.757	07/23/02 08:58:05	85.942	07/23/02 10:04:05	81.619
07/23/02 06:47:05	88.160	07/23/02 07:53:05	88.757	07/23/02 08:59:05	83.752	07/23/02 10:05:05	81.790
07/23/02 06:48:05	89.525	07/23/02 07:54:05	88.416	07/23/02 09:00:05	78.064	07/23/02 10:06:05	80.766
07/23/02 06:49:05	89.440	07/23/02 07:55:05	86.198	07/23/02 09:01:05	77.808	07/23/02 10:07:05	80.766
07/23/02 06:50:05	87.478	07/23/02 07:56:05	84.520	07/23/02 09:02:05	77.467	07/23/02 10:08:05	80.681
07/23/02 06:51:05	88.416	07/23/02 07:57:05	87.222	07/23/02 09:03:05	75.505	07/23/02 10:09:05	81.619
07/23/02 06:52:05	87.222	07/23/02 07:58:05	87.392	07/23/02 09:04:05	79.259	07/23/02 10:10:05	79.515
07/23/02 06:53:05	87.734	07/23/02 07:59:05	87.392	07/23/02 09:05:05	79.259	07/23/02 10:11:05	82.814
07/23/02 06:54:05	88.843	07/23/02 08:00:05	87.904	07/23/02 09:06:05	78.064	07/23/02 10:12:05	81.705
07/23/02 06:55:05	88.501	07/23/02 08:01:05	88.416	07/23/02 09:07:05	78.918	07/23/02 10:13:05	80.453
07/23/02 06:56:05	88.672	07/23/02 08:02:05	88.501	07/23/02 09:08:05	79.003	07/23/02 10:14:05	80.283
07/23/02 06:57:05	87.392	07/23/02 08:03:05	88.501	07/23/02 09:09:05	77.211	07/23/02 10:15:05	80.681
07/23/02 06:58:05	88.331	07/23/02 08:04:05	90.208	07/23/02 09:10:05	76.443	07/23/02 10:16:05	80.112
07/23/02 06:59:05	87.478	07/23/02 08:05:05	87.734	07/23/02 09:11:05	77.211	07/23/02 10:17:05	81.363
07/23/02 07:00:05	86.795	07/23/02 08:06:05	88.245	07/23/02 09:12:05	78.150	07/23/02 10:18:05	80.510
07/23/02 07:01:05	86.539	07/23/02 08:07:05	83.667	07/23/02 09:13:05	76.443	07/23/02 10:19:05	81.449

CHEATHAM AND MCGHEHEE - NO. 7490 cont.

Date	Time	Pres (PSI)
07/23/02	10:20:05	82.131
07/23/02	10:21:05	87.734
07/23/02	10:22:05	88.587
07/23/02	10:23:05	86.027
07/23/02	10:24:05	88.075
07/23/02	10:25:05	86.369
07/23/02	10:26:05	86.624
07/23/02	10:27:05	87.051
07/23/02	10:28:05	88.501
07/23/02	10:29:05	86.624
07/23/02	10:30:05	78.576
07/23/02	10:31:05	79.174
07/23/02	10:32:05	89.952
07/23/02	10:33:05	86.198
07/23/02	10:34:05	77.979
07/23/02	10:35:05	89.866
07/23/02	10:36:05	91.232
07/23/02	10:37:05	87.478
07/23/02	10:38:05	87.563
07/23/02	10:39:05	87.392
07/23/02	10:40:05	88.075
07/23/02	10:41:05	85.942
07/23/02	10:42:05	88.587
07/23/02	10:43:05	87.392
07/23/02	10:44:05	88.757
07/23/02	10:45:05	87.734
07/23/02	10:46:05	85.032
07/23/02	10:47:05	84.861
07/23/02	10:48:05	85.373
07/23/02	10:49:05	82.984
07/23/02	10:50:05	83.070
07/23/02	10:51:05	83.240
07/23/02	10:52:05	82.728
07/23/02	10:53:05	83.923
07/23/02	10:54:05	84.264
07/23/02	10:55:05	84.179
07/23/02	10:56:05	81.534
07/23/02	10:57:05	82.387
07/23/02	10:58:05	84.776
07/23/02	10:59:05	85.117
07/23/02	11:00:05	75.505
07/23/02	11:01:05	71.182
07/23/02	11:02:05	73.827
07/23/02	11:03:05	92.995
07/23/02	11:04:05	83.070
07/23/02	11:05:05	83.582
07/23/02	11:06:05	58.470
07/23/02	11:07:05	82.984
07/23/02	11:08:05	82.643
07/23/02	11:09:05	80.766
07/23/02	11:10:05	83.837
07/23/02	11:11:05	83.155
07/23/02	11:12:05	81.790
07/23/02	11:13:05	82.302
07/23/02	11:14:05	81.961
07/23/02	11:15:05	81.961
07/23/02	11:16:05	82.472
07/23/02	11:17:05	82.814
07/23/02	11:18:05	82.814
07/23/02	11:19:05	80.595
07/23/02	11:20:05	80.851
07/23/02	11:21:05	81.363
07/23/02	11:22:05	81.875
07/23/02	11:23:05	83.411
07/23/02	11:24:05	82.216
07/23/02	11:25:05	82.046
07/23/02	11:26:05	84.264
07/23/02	11:27:05	82.558
07/23/02	11:28:05	83.411
07/23/02	11:29:05	82.472
07/23/02	11:30:05	83.837
07/23/02	11:31:05	82.387
07/23/02	11:32:05	83.837
07/23/02	11:33:05	85.288
07/23/02	11:34:05	83.155
07/23/02	11:35:05	84.093
07/23/02	11:36:05	84.093
07/23/02	11:37:05	83.837
07/23/02	11:38:05	82.131
07/23/02	11:39:05	84.605
07/23/02	11:40:05	82.216
07/23/02	11:41:05	85.032
07/23/02	11:42:05	84.605
07/23/02	11:43:05	83.752
07/23/02	11:44:05	82.387
07/23/02	11:45:05	83.582
07/23/02	11:46:05	83.667
07/23/02	11:47:05	84.520
07/23/02	11:48:05	83.326
07/23/02	11:49:05	83.752
07/23/02	11:50:05	83.923
07/23/02	11:51:05	84.691
07/23/02	11:52:05	83.496
07/23/02	11:53:05	83.326
07/23/02	11:54:05	84.520
07/23/02	11:55:05	84.008
07/23/02	11:56:05	83.923
07/23/02	11:57:05	83.070
07/23/02	11:58:05	83.326
07/23/02	11:59:05	82.387
07/23/02	12:00:05	84.605
07/23/02	12:01:05	83.837
07/23/02	12:02:05	82.814
07/23/02	12:03:05	83.155
07/23/02	12:04:05	83.326
07/23/02	12:05:05	83.667
07/23/02	12:06:05	82.814
07/23/02	12:07:05	83.411
07/23/02	12:08:05	83.070
07/23/02	12:09:05	82.814
07/23/02	12:10:05	83.752
07/23/02	12:11:05	82.814
07/23/02	12:12:05	83.155
07/23/02	12:13:05	83.923
07/23/02	12:14:05	85.117
07/23/02	12:15:05	84.264
07/23/02	12:16:05	82.899
07/23/02	12:17:05	84.349
07/23/02	12:18:05	83.155
07/23/02	12:19:05	81.619
07/23/02	12:20:05	82.984
07/23/02	12:21:05	82.984
07/23/02	12:22:05	83.752
07/23/02	12:23:05	83.496
07/23/02	12:24:05	83.837
07/23/02	12:25:05	83.155
07/23/02	12:26:05	82.643
07/23/02	12:27:05	82.728
07/23/02	12:28:05	83.752
07/23/02	12:29:05	81.875
07/23/02	12:30:05	83.667
07/23/02	12:31:05	83.496
07/23/02	12:32:05	83.411
07/23/02	12:33:05	83.923
07/23/02	12:34:05	83.582
07/23/02	12:35:05	85.117
07/23/02	12:36:05	82.984
07/23/02	12:37:05	84.179
07/23/02	12:38:05	81.619
07/23/02	12:39:05	84.349
07/23/02	12:40:05	82.728
07/23/02	12:41:05	83.326
07/23/02	12:42:05	82.046
07/23/02	12:43:05	83.923
07/23/02	12:44:05	83.155
07/23/02	12:45:05	84.520
07/23/02	12:46:05	83.496
07/23/02	12:47:05	84.435
07/23/02	12:48:05	83.837
07/23/02	12:49:05	84.520
07/23/02	12:50:05	83.582
07/23/02	12:51:05	84.179
07/23/02	12:52:05	85.458
07/23/02	12:53:05	84.947
07/23/02	12:54:05	84.264
07/23/02	12:55:05	83.411
07/23/02	12:56:05	82.814
07/23/02	12:57:05	82.814
07/23/02	12:58:05	82.814
07/23/02	12:59:05	81.363
07/23/02	13:00:05	82.558
07/23/02	13:01:05	81.449
07/23/02	13:02:05	82.302
07/23/02	13:03:05	83.326
07/23/02	13:04:05	84.264
07/23/02	13:05:05	82.643
07/23/02	13:06:05	83.582
07/23/02	13:07:05	81.363
07/23/02	13:08:05	80.368
07/23/02	13:09:05	83.411
07/23/02	13:10:05	65.836
07/23/02	13:11:05	59.551
07/23/02	13:12:05	59.807
07/23/02	13:13:05	56.167
07/23/02	13:14:05	55.484
07/23/02	13:15:05	55.655
07/23/02	13:16:05	55.228
07/23/02	13:17:05	53.465
07/23/02	13:18:05	52.612
07/23/02	13:19:05	50.991
07/23/02	13:20:05	51.076
07/23/02	13:21:05	59.892
07/23/02	13:22:05	67.201
07/23/02	13:23:05	81.278
07/23/02	13:24:05	82.302
07/23/02	13:25:05	81.619
07/23/02	13:26:05	81.107
07/23/02	13:27:05	83.155
07/23/02	13:28:05	80.595
07/23/02	13:29:05	81.534
07/23/02	13:30:05	81.961
07/23/02	13:31:05	80.937
07/23/02	13:32:05	79.600
07/23/02	13:33:05	80.510
07/23/02	13:34:05	81.278
07/23/02	13:35:05	82.046
07/23/02	13:36:05	79.174
07/23/02	13:37:05	80.766
07/23/02	13:38:05	79.941
07/23/02	13:39:05	81.363
07/23/02	13:40:05	76.870
07/23/02	13:41:05	77.808
07/23/02	13:42:05	78.747
07/23/02	13:43:05	79.003
07/23/02	13:44:05	88.501
07/23/02	13:45:05	87.222
07/23/02	13:46:05	82.046
07/23/02	13:47:05	83.326
07/23/02	13:48:05	82.387
07/23/02	13:49:05	80.283
07/23/02	13:50:05	80.937
07/23/02	13:51:05	81.278
07/23/02	13:52:05	79.600
07/23/02	13:53:05	78.662
07/23/02	13:54:05	82.046
07/23/02	13:55:05	81.107
07/23/02	13:56:05	81.790
07/23/02	13:57:05	82.387
07/23/02	13:58:05	78.235
07/23/02	13:59:05	81.278
07/23/02	14:00:05	79.685
07/23/02	14:01:05	79.429
07/23/02	14:02:05	80.766
07/23/02	14:03:05	80.368
07/23/02	14:04:05	81.705
07/23/02	14:05:05	80.112
07/23/02	14:06:05	81.619
07/23/02	14:07:05	81.790
07/23/02	14:08:05	79.941
07/23/02	14:09:05	80.368
07/23/02	14:10:05	81.193
07/23/02	14:11:05	83.582
07/23/02	14:12:05	81.278
07/23/02	14:13:05	82.814
07/23/02	14:14:05	81.875
07/23/02	14:15:05	82.643
07/23/02	14:16:05	81.875
07/23/02	14:17:05	82.387
07/23/02	14:18:05	82.558
07/23/02	14:19:05	81.875
07/23/02	14:20:05	81.875
07/23/02	14:21:05	82.472
07/23/02	14:22:05	83.155
07/23/02	14:23:05	82.131
07/23/02	14:24:05	82.899
07/23/02	14:25:05	83.155
07/23/02	14:26:05	82.643
07/23/02	14:27:05	82.131
07/23/02	14:28:05	83.496
07/23/02	14:29:05	82.131
07/23/02	14:30:05	81.022
07/23/02	14:31:05	82.984
07/23/02	14:32:05	82.643
07/23/02	14:33:05	81.875
07/23/02	14:34:05	81.705
07/23/02	14:35:05	81.790
07/23/02	14:36:05	81.022
07/23/02	14:37:05	81.534
07/23/02	14:38:05	82.472
07/23/02	14:39:05	80.851
07/23/02	14:40:05	82.046
07/23/02	14:41:05	82.643
07/23/02	14:42:05	83.582
07/23/02	14:43:05	82.984

CHEATHAM AND MCGHEHEE - NO. 7490 cont.

Date	Time	Pres (PSI)
07/23/02	14:44:05	81.790
07/23/02	14:45:05	82.046
07/23/02	14:46:05	59.551
07/23/02	14:47:05	62.537
07/23/02	14:48:05	74.254
07/23/02	14:49:05	79.941
07/23/02	14:50:05	80.453
07/23/02	14:51:05	79.429
07/23/02	14:52:05	81.022
07/23/02	14:53:05	81.193
07/23/02	14:54:05	80.766
07/23/02	14:55:05	80.510
07/23/02	14:56:05	80.681
07/23/02	14:57:05	79.003
07/23/02	14:58:05	80.937
07/23/02	14:59:05	80.595
07/23/02	15:00:05	81.193
07/23/02	15:01:05	80.851
07/23/02	15:02:05	80.027
07/23/02	15:03:05	81.363
07/23/02	15:04:05	81.875
07/23/02	15:05:05	80.937
07/23/02	15:06:05	80.766
07/23/02	15:07:05	80.368
07/23/02	15:08:05	80.453
07/23/02	15:09:05	81.790
07/23/02	15:10:05	80.283
07/23/02	15:11:05	81.022
07/23/02	15:12:05	81.961
07/23/02	15:13:05	82.131
07/23/02	15:14:05	85.117
07/23/02	15:15:05	81.705
07/23/02	15:16:05	82.814
07/23/02	15:17:05	80.937
07/23/02	15:18:05	83.411
07/23/02	15:19:05	83.240
07/23/02	15:20:05	91.374
07/23/02	15:21:05	85.800
07/23/02	15:22:05	86.283
07/23/02	15:23:05	85.373
07/23/02	15:24:05	85.203
07/23/02	15:25:05	86.198
07/23/02	15:26:05	86.966
07/23/02	15:27:05	87.051
07/23/02	15:28:05	89.269
07/23/02	15:29:05	86.710
07/23/02	15:30:05	87.648
07/23/02	15:31:05	86.795
07/23/02	15:32:05	88.160
07/23/02	15:33:05	86.624
07/23/02	15:34:05	87.222
07/23/02	15:35:05	85.800
07/23/02	15:36:05	85.544
07/23/02	15:37:05	84.861
07/23/02	15:38:05	82.728
07/23/02	15:39:05	85.800
07/23/02	15:40:05	85.203
07/23/02	15:41:05	86.369
07/23/02	15:42:05	85.714
07/23/02	15:43:05	86.539
07/23/02	15:44:05	85.942
07/23/02	15:45:05	87.734
07/23/02	15:46:05	86.027
07/23/02	15:47:05	86.710
07/23/02	15:48:05	85.942
07/23/02	15:49:05	88.331
07/23/02	15:50:05	86.795
07/23/02	15:51:05	85.032
07/23/02	15:52:05	86.880
07/23/02	15:53:05	84.605
07/23/02	15:54:05	85.800
07/23/02	15:55:05	86.369
07/23/02	15:56:05	86.283
07/23/02	15:57:05	85.032
07/23/02	15:58:05	83.923
07/23/02	15:59:05	87.307
07/23/02	16:00:05	85.885
07/23/02	16:01:05	86.369
07/23/02	16:02:05	84.349
07/23/02	16:03:05	86.027
07/23/02	16:04:05	86.198
07/23/02	16:05:05	85.373
07/23/02	16:06:05	85.117
07/23/02	16:07:05	86.624
07/23/02	16:08:05	86.966
07/23/02	16:09:05	84.435
07/23/02	16:10:05	85.885
07/23/02	16:11:05	85.117
07/23/02	16:12:05	82.814
07/23/02	16:13:05	87.051
07/23/02	16:14:05	84.776
07/23/02	16:15:05	85.885
07/23/02	16:16:05	86.113
07/23/02	16:17:05	86.710
07/23/02	16:18:05	86.027
07/23/02	16:19:05	86.624
07/23/02	16:20:05	84.349
07/23/02	16:21:05	86.539
07/23/02	16:22:05	85.800
07/23/02	16:23:05	84.605
07/23/02	16:24:05	73.486
07/23/02	16:25:05	86.795
07/23/02	16:26:05	87.307
07/23/02	16:27:05	85.629
07/23/02	16:28:05	84.264
07/23/02	16:29:05	86.710
07/23/02	16:30:05	85.629
07/23/02	16:31:05	85.373
07/23/02	16:32:05	84.264
07/23/02	16:33:05	86.795
07/23/02	16:34:05	86.624
07/23/02	16:35:05	86.198
07/23/02	16:36:05	85.714
07/23/02	16:37:05	85.800
07/23/02	16:38:05	86.539
07/23/02	16:39:05	87.392
07/23/02	16:40:05	84.776
07/23/02	16:41:05	85.800
07/23/02	16:42:05	66.604
07/23/02	16:43:05	67.115
07/23/02	16:44:05	68.566
07/23/02	16:45:05	69.675
07/23/02	16:46:05	66.774
07/23/02	16:47:05	66.774
07/23/02	16:48:05	79.941
07/23/02	16:49:05	88.501
07/23/02	16:50:05	85.203
07/23/02	16:51:05	83.496
07/23/02	16:52:05	82.387
07/23/02	16:53:05	84.435
07/23/02	16:54:05	81.961
07/23/02	16:55:05	84.349
07/23/02	16:56:05	82.558
07/23/02	16:57:05	81.961
07/23/02	16:58:05	83.411
07/23/02	16:59:05	84.691
07/23/02	17:00:05	84.520
07/23/02	17:01:05	86.966
07/23/02	17:02:05	84.605
07/23/02	17:03:05	84.093
07/23/02	17:04:05	84.605
07/23/02	17:05:05	84.435
07/23/02	17:06:05	83.752
07/23/02	17:07:05	82.728
07/23/02	17:08:05	82.984
07/23/02	17:09:05	83.155
07/23/02	17:10:05	90.464
07/23/02	17:11:05	85.458
07/23/02	17:12:05	87.136
07/23/02	17:13:05	86.795
07/23/02	17:14:05	84.947
07/23/02	17:15:05	85.942
07/23/02	17:16:05	86.369
07/23/02	17:17:05	84.349
07/23/02	17:18:05	84.605
07/23/02	17:19:05	84.349
07/23/02	17:20:05	85.714
07/23/02	17:21:05	85.373
07/23/02	17:22:05	85.373
07/23/02	17:23:05	84.947
07/23/02	17:24:05	84.264
07/23/02	17:25:05	86.027
07/23/02	17:26:05	86.710
07/23/02	17:27:05	83.411
07/23/02	17:28:05	85.544
07/23/02	17:29:05	85.032
07/23/02	17:30:05	83.837
07/23/02	17:31:05	86.113
07/23/02	17:32:05	85.032
07/23/02	17:33:05	84.861
07/23/02	17:34:05	82.472
07/23/02	17:35:05	85.544
07/23/02	17:36:05	85.629
07/23/02	17:37:05	84.691
07/23/02	17:38:05	85.032
07/23/02	17:39:05	88.757
07/23/02	17:40:05	85.544
07/23/02	17:41:05	83.411
07/23/02	17:42:05	84.691
07/23/02	17:43:05	85.800
07/23/02	17:44:05	85.117
07/23/02	17:45:05	85.800
07/23/02	17:46:05	84.691
07/23/02	17:47:05	87.136
07/23/02	17:48:05	84.691
07/23/02	17:49:05	85.544
07/23/02	17:50:05	84.861
07/23/02	17:51:05	86.710
07/23/02	17:52:05	85.714
07/23/02	17:53:05	80.027
07/23/02	17:54:05	90.976
07/23/02	17:55:05	83.582
07/23/02	17:56:05	84.008
07/23/02	17:57:05	85.458
07/23/02	17:58:05	86.198
07/23/02	17:59:05	85.203
07/23/02	18:00:05	86.369
07/23/02	18:01:05	83.582
07/23/02	18:02:05	85.117
07/23/02	18:03:05	85.544
07/23/02	18:04:05	84.605
07/23/02	18:05:05	86.454
07/23/02	18:06:05	85.032
07/23/02	18:07:05	84.520
07/23/02	18:08:05	85.458
07/23/02	18:09:05	84.520
07/23/02	18:10:05	84.093
07/23/02	18:11:05	84.691
07/23/02	18:12:05	85.117
07/23/02	18:13:05	85.629
07/23/02	18:14:05	85.714
07/23/02	18:15:05	85.458
07/23/02	18:16:05	85.032
07/23/02	18:17:05	86.283
07/23/02	18:18:05	84.605
07/23/02	18:19:05	86.198
07/23/02	18:20:05	85.714
07/23/02	18:21:05	84.947
07/23/02	18:22:05	83.070
07/23/02	18:23:05	83.837
07/23/02	18:24:05	84.691
07/23/02	18:25:05	84.008
07/23/02	18:26:05	83.923
07/23/02	18:27:05	86.283
07/23/02	18:28:05	85.288
07/23/02	18:29:05	85.288
07/23/02	18:30:05	84.093
07/23/02	18:31:05	84.776
07/23/02	18:32:05	83.923
07/23/02	18:33:05	85.032
07/23/02	18:34:05	85.544
07/23/02	18:35:05	84.179
07/23/02	18:36:05	83.582
07/23/02	18:37:05	84.947
07/23/02	18:38:05	85.544
07/23/02	18:39:05	83.582
07/23/02	18:40:05	86.027
07/23/02	18:41:05	85.373
07/23/02	18:42:05	84.691
07/23/02	18:43:05	85.203
07/23/02	18:44:05	85.032
07/23/02	18:45:05	85.373
07/23/02	18:46:05	86.369
07/23/02	18:47:05	84.861
07/23/02	18:48:05	85.458
07/23/02	18:49:05	84.776
07/23/02	18:50:05	84.520
07/23/02	18:51:05	85.032
07/23/02	18:52:05	85.885
07/23/02	18:53:05	85.032
07/23/02	18:54:05	85.458
07/23/02	18:55:05	85.117
07/23/02	18:56:05	85.032
07/23/02	18:57:05	85.032
07/23/02	18:58:05	85.714
07/23/02	18:59:05	85.714
07/23/02	19:00:05	85.032
07/23/02	19:01:05	85.544
07/23/02	19:02:05	85.544
07/23/02	19:03:05	84.947
07/23/02	19:04:05	85.373
07/23/02	19:05:05	84.520
07/23/02	19:06:05	87.648
07/23/02	19:07:05	85.629

CHEATHAM AND MCGHEHEE - NO. 7490 cont.

Date	Time	Pres (PSI)
07/23/02	19:08:05	85.714
07/23/02	19:09:05	85.942
07/23/02	19:10:05	85.942
07/23/02	19:11:05	87.051
07/23/02	19:12:05	86.710
07/23/02	19:13:05	85.032
07/23/02	19:14:05	86.710
07/23/02	19:15:05	84.691
07/23/02	19:16:05	84.605
07/23/02	19:17:05	86.113
07/23/02	19:18:05	85.458
07/23/02	19:19:05	84.349
07/23/02	19:20:05	86.198
07/23/02	19:21:05	87.648
07/23/02	19:22:05	85.203
07/23/02	19:23:05	85.629
07/23/02	19:24:05	85.942
07/23/02	19:25:05	86.539
07/23/02	19:26:05	85.117
07/23/02	19:27:05	85.885
07/23/02	19:28:05	86.198
07/23/02	19:29:05	85.373
07/23/02	19:30:05	86.880
07/23/02	19:31:05	84.605
07/23/02	19:32:05	85.032
07/23/02	19:33:05	86.113
07/23/02	19:34:05	84.520
07/23/02	19:35:05	84.349
07/23/02	19:36:05	85.942
07/23/02	19:37:05	85.288
07/23/02	19:38:05	85.117
07/23/02	19:39:05	85.942
07/23/02	19:40:05	85.032
07/23/02	19:41:05	86.198
07/23/02	19:42:05	86.454
07/23/02	19:43:05	85.885
07/23/02	19:44:05	86.369
07/23/02	19:45:05	85.117
07/23/02	19:46:05	86.283
07/23/02	19:47:05	85.458
07/23/02	19:48:05	85.458
07/23/02	19:49:05	85.458
07/23/02	19:50:05	85.800
07/23/02	19:51:05	85.714
07/23/02	19:52:05	87.478
07/23/02	19:53:05	85.629
07/23/02	19:54:05	86.369
07/23/02	19:55:05	85.942
07/23/02	19:56:05	85.203
07/23/02	19:57:05	84.349
07/23/02	19:58:05	85.032
07/23/02	19:59:05	85.203
07/23/02	20:00:05	86.198
07/23/02	20:01:05	84.691
07/23/02	20:02:05	86.454
07/23/02	20:03:05	86.027
07/23/02	20:04:05	86.880
07/23/02	20:05:05	84.691
07/23/02	20:06:05	85.942
07/23/02	20:07:05	86.966
07/23/02	20:08:05	86.454
07/23/02	20:09:05	84.435
07/23/02	20:10:05	85.942
07/23/02	20:11:05	86.113
07/23/02	20:12:05	84.861
07/23/02	20:13:05	86.198
07/23/02	20:14:05	85.458
07/23/02	20:15:05	88.075
07/23/02	20:16:05	86.027
07/23/02	20:17:05	85.203
07/23/02	20:18:05	85.288
07/23/02	20:19:05	85.203
07/23/02	20:20:05	86.113
07/23/02	20:21:05	85.629
07/23/02	20:22:05	85.544
07/23/02	20:23:05	84.947
07/23/02	20:24:05	84.520
07/23/02	20:25:05	84.605
07/23/02	20:26:05	86.283
07/23/02	20:27:05	84.435
07/23/02	20:28:05	85.629
07/23/02	20:29:05	83.837
07/23/02	20:30:05	82.131
07/23/02	20:31:05	86.113
07/23/02	20:32:05	84.435
07/23/02	20:33:05	85.458
07/23/02	20:34:05	84.861
07/23/02	20:35:05	85.885
07/23/02	20:36:05	84.947
07/23/02	20:37:05	86.369
07/23/02	20:38:05	85.629
07/23/02	20:39:05	85.942
07/23/02	20:40:05	86.966
07/23/02	20:41:05	87.222
07/23/02	20:42:05	86.283
07/23/02	20:43:05	86.795
07/23/02	20:44:05	85.458
07/23/02	20:45:05	86.369
07/23/02	20:46:05	86.027
07/23/02	20:47:05	86.795
07/23/02	20:48:05	86.624
07/23/02	20:49:05	85.032
07/23/02	20:50:05	87.051
07/23/02	20:51:05	86.283
07/23/02	20:52:05	85.203
07/23/02	20:53:05	85.942
07/23/02	20:54:05	86.283
07/23/02	20:55:05	86.454
07/23/02	20:56:05	85.629
07/23/02	20:57:05	85.942
07/23/02	20:58:05	86.795
07/23/02	20:59:05	84.349
07/23/02	21:00:05	84.093
07/23/02	21:01:05	85.458
07/23/02	21:02:05	85.117
07/23/02	21:03:05	83.923
07/23/02	21:04:05	83.837
07/23/02	21:05:05	85.288
07/23/02	21:06:05	86.283
07/23/02	21:07:05	84.435
07/23/02	21:08:05	85.203
07/23/02	21:09:05	85.942
07/23/02	21:10:05	87.648
07/23/02	21:11:05	85.373
07/23/02	21:12:05	85.885
07/23/02	21:13:05	85.629
07/23/02	21:14:05	85.203
07/23/02	21:15:05	85.373
07/23/02	21:16:05	83.155
07/23/02	21:17:05	84.947
07/23/02	21:18:05	84.520
07/23/02	21:19:05	86.539
07/23/02	21:20:05	85.629
07/23/02	21:21:05	83.155
07/23/02	21:22:05	85.117
07/23/02	21:23:05	86.283
07/23/02	21:24:05	85.544
07/23/02	21:25:05	85.629
07/23/02	21:26:05	86.283
07/23/02	21:27:05	85.800
07/23/02	21:28:05	78.832
07/23/02	21:29:05	85.544
07/23/02	21:30:05	85.203
07/23/02	21:31:05	87.222
07/23/02	21:32:05	88.928
07/23/02	21:33:05	85.714
07/23/02	21:34:05	84.264
07/23/02	21:35:05	85.458
07/23/02	21:36:05	85.629
07/23/02	21:37:05	86.283
07/23/02	21:38:05	85.629
07/23/02	21:39:05	86.710
07/23/02	21:40:05	85.942
07/23/02	21:41:05	86.880
07/23/02	21:42:05	86.283
07/23/02	21:43:05	86.624
07/23/02	21:44:05	86.624
07/23/02	21:45:05	86.710
07/23/02	21:46:05	87.307
07/23/02	21:47:05	86.369
07/23/02	21:48:05	66.177
07/23/02	21:49:05	63.987
07/23/02	21:50:05	66.604
07/23/02	21:51:05	67.115
07/23/02	21:52:05	66.092
07/23/02	21:53:05	66.006
07/23/02	21:54:05	65.409
07/23/02	21:55:05	65.494
07/23/02	21:56:05	65.068
07/23/02	21:57:05	65.324
07/23/02	21:58:05	71.182
07/23/02	21:59:05	82.046
07/23/02	22:00:05	84.349
07/23/02	22:01:05	84.093
07/23/02	22:02:05	83.411
07/23/02	22:03:05	82.302
07/23/02	22:04:05	82.728
07/23/02	22:05:05	82.814
07/23/02	22:06:05	82.728
07/23/02	22:07:05	82.728
07/23/02	22:08:05	84.264
07/23/02	22:09:05	82.814
07/23/02	22:10:05	84.349
07/23/02	22:11:05	85.203
07/23/02	22:12:05	83.582
07/23/02	22:13:05	82.643
07/23/02	22:14:05	83.326
07/23/02	22:15:05	83.496
07/23/02	22:16:05	84.264
07/23/02	22:17:05	84.861
07/23/02	22:18:05	84.008
07/23/02	22:19:05	84.179
07/23/02	22:20:05	92.824
07/23/02	22:21:05	84.093
07/23/02	22:22:05	87.563
07/23/02	22:23:05	87.734
07/23/02	22:24:05	86.795
07/23/02	22:25:05	87.648
07/23/02	22:26:05	87.051
07/23/02	22:27:05	87.392
07/23/02	22:28:05	86.283
07/23/02	22:29:05	87.478
07/23/02	22:30:05	86.795
07/23/02	22:31:05	87.136
07/23/02	22:32:05	86.624
07/23/02	22:33:05	86.624
07/23/02	22:34:05	87.563
07/23/02	22:35:05	87.307
07/23/02	22:36:05	87.478
07/23/02	22:37:05	87.222
07/23/02	22:38:05	87.648
07/23/02	22:39:05	88.075
07/23/02	22:40:05	88.501
07/23/02	22:41:05	87.563
07/23/02	22:42:05	88.160
07/23/02	22:43:05	88.672
07/23/02	22:44:05	88.928
07/23/02	22:45:05	87.904
07/23/02	22:46:05	88.928
07/23/02	22:47:05	87.648
07/23/02	22:48:05	88.160
07/23/02	22:49:05	88.501
07/23/02	22:50:05	89.013
07/23/02	22:51:05	88.928
07/23/02	22:52:05	87.734
07/23/02	22:53:05	89.013
07/23/02	22:54:05	89.355
07/23/02	22:55:05	89.440
07/23/02	22:56:05	89.013
07/23/02	22:57:05	89.013
07/23/02	22:58:05	88.416
07/23/02	22:59:05	88.928
07/23/02	23:00:05	88.160
07/23/02	23:01:05	88.587
07/23/02	23:02:05	87.904
07/23/02	23:03:05	87.819
07/23/02	23:04:05	87.563
07/23/02	23:05:05	88.501
07/23/02	23:06:05	88.331
07/23/02	23:07:05	88.331
07/23/02	23:08:05	87.990
07/23/02	23:09:05	89.013
07/23/02	23:10:05	88.587
07/23/02	23:11:05	89.184
07/23/02	23:12:05	89.269
07/23/02	23:13:05	88.501
07/23/02	23:14:05	89.696
07/23/02	23:15:05	89.525
07/23/02	23:16:05	89.866
07/23/02	23:17:05	90.037
07/23/02	23:18:05	88.331
07/23/02	23:19:05	88.416
07/23/02	23:20:05	88.928
07/23/02	23:21:05	89.184
07/23/02	23:22:05	88.587
07/23/02	23:23:05	89.866
07/23/02	23:24:05	90.122
07/23/02	23:25:05	90.208
07/23/02	23:26:05	89.269
07/23/02	23:27:05	90.378
07/23/02	23:28:05	90.208
07/23/02	23:29:05	90.208
07/23/02	23:30:05	90.378
07/23/02	23:31:05	89.013

CHEATHAM AND MCGHEHEE - NO. 7490 cont.

Date Time	Pres (PSI)
07/23/02 23:32:05	88.587
07/23/02 23:33:05	89.355
07/23/02 23:34:05	88.757
07/23/02 23:35:05	89.013
07/23/02 23:36:05	89.611
07/23/02 23:37:05	89.013
07/23/02 23:38:05	89.866
07/23/02 23:39:05	90.293
07/23/02 23:40:05	90.805
07/23/02 23:41:05	90.293
07/23/02 23:42:05	90.549
07/23/02 23:43:05	90.805
07/23/02 23:44:05	90.976
07/23/02 23:45:05	91.061
07/23/02 23:46:05	91.544
07/23/02 23:47:05	91.061
07/23/02 23:48:05	91.288
07/23/02 23:49:05	90.464
07/23/02 23:50:05	89.611
07/23/02 23:51:05	90.805
07/23/02 23:52:05	91.544
07/23/02 23:53:05	90.805
07/23/02 23:54:05	91.146
07/23/02 23:55:05	90.890
07/23/02 23:56:05	91.544
07/23/02 23:57:05	91.459
07/23/02 23:58:05	91.800
07/23/02 23:59:05	91.232
07/24/02 00:00:05	91.459
07/24/02 00:01:05	91.800
07/24/02 00:02:05	90.890
07/24/02 00:03:05	91.232
07/24/02 00:04:05	92.227
07/24/02 00:05:05	91.630
07/24/02 00:06:05	92.056
07/24/02 00:07:05	90.890
07/24/02 00:08:05	92.227
07/24/02 00:09:05	91.146
07/24/02 00:10:05	91.232
07/24/02 00:11:05	91.630
07/24/02 00:12:05	92.398
07/24/02 00:13:05	91.288
07/24/02 00:14:05	92.056
07/24/02 00:15:05	91.715
07/24/02 00:16:05	90.976
07/24/02 00:17:05	91.146
07/24/02 00:18:05	91.374
07/24/02 00:19:05	92.227
07/24/02 00:20:05	92.568
07/24/02 00:21:05	92.312
07/24/02 00:22:05	91.800
07/24/02 00:23:05	92.568
07/24/02 00:24:05	92.142
07/24/02 00:25:05	92.312
07/24/02 00:26:05	91.886
07/24/02 00:27:05	92.056
07/24/02 00:28:05	92.142
07/24/02 00:29:05	92.739
07/24/02 00:30:05	92.909
07/24/02 00:31:05	92.568
07/24/02 00:32:05	93.336
07/24/02 00:33:05	93.165
07/24/02 00:34:05	91.886
07/24/02 00:35:05	92.909
07/24/02 00:36:05	92.995
07/24/02 00:37:05	92.227

Date Time	Pres (PSI)
07/24/02 00:38:05	93.848
07/24/02 00:39:05	92.653
07/24/02 00:40:05	92.568
07/24/02 00:41:05	92.398
07/24/02 00:42:05	92.995
07/24/02 00:43:05	92.909
07/24/02 00:44:05	93.165
07/24/02 00:45:05	93.165
07/24/02 00:46:05	92.568
07/24/02 00:47:05	93.421
07/24/02 00:48:05	93.848
07/24/02 00:49:05	93.421
07/24/02 00:50:05	93.165
07/24/02 00:51:05	93.080
07/24/02 00:52:05	92.739
07/24/02 00:53:05	92.824
07/24/02 00:54:05	93.933
07/24/02 00:55:05	92.483
07/24/02 00:56:05	93.336
07/24/02 00:57:05	92.824
07/24/02 00:58:05	92.739
07/24/02 00:59:05	92.995
07/24/02 01:00:05	92.312
07/24/02 01:01:05	92.312
07/24/02 01:02:05	92.398
07/24/02 01:03:05	92.312
07/24/02 01:04:05	92.568
07/24/02 01:05:05	92.653
07/24/02 01:06:05	92.824
07/24/02 01:07:05	92.142
07/24/02 01:08:05	92.142
07/24/02 01:09:05	91.886
07/24/02 01:10:05	92.312
07/24/02 01:11:05	92.653
07/24/02 01:12:05	92.398
07/24/02 01:13:05	92.739
07/24/02 01:14:05	91.800
07/24/02 01:15:05	87.478
07/24/02 01:16:05	80.112
07/24/02 01:17:05	81.449
07/24/02 01:18:05	91.459
07/24/02 01:19:05	93.507
07/24/02 01:20:05	91.232
07/24/02 01:21:05	92.568
07/24/02 01:22:05	91.630
07/24/02 01:23:05	91.630
07/24/02 01:24:05	92.142
07/24/02 01:25:05	91.971
07/24/02 01:26:05	91.971
07/24/02 01:27:05	93.251
07/24/02 01:28:05	92.739
07/24/02 01:29:05	92.056
07/24/02 01:30:05	92.142
07/24/02 01:31:05	92.398
07/24/02 01:32:05	92.312
07/24/02 01:33:05	90.208
07/24/02 01:34:05	91.288
07/24/02 01:35:05	91.715
07/24/02 01:36:05	92.483
07/24/02 01:37:05	92.483
07/24/02 01:38:05	91.886
07/24/02 01:39:05	91.971
07/24/02 01:40:05	91.715
07/24/02 01:41:05	91.630
07/24/02 01:42:05	91.630
07/24/02 01:43:05	92.483

Date Time	Pres (PSI)
07/24/02 01:44:05	91.886
07/24/02 01:45:05	91.459
07/24/02 01:46:05	92.142
07/24/02 01:47:05	91.715
07/24/02 01:48:05	90.890
07/24/02 01:49:05	91.800
07/24/02 01:50:05	91.886
07/24/02 01:51:05	91.886
07/24/02 01:52:05	91.800
07/24/02 01:53:05	91.544
07/24/02 01:54:05	92.312
07/24/02 01:55:05	92.483
07/24/02 01:56:05	91.800
07/24/02 01:57:05	91.971
07/24/02 01:58:05	92.227
07/24/02 01:59:05	92.142
07/24/02 02:00:05	91.886
07/24/02 02:01:05	95.981
07/24/02 02:02:05	90.549
07/24/02 02:03:05	93.336
07/24/02 02:04:05	93.677
07/24/02 02:05:05	92.568
07/24/02 02:06:05	92.909
07/24/02 02:07:05	92.227
07/24/02 02:08:05	92.142
07/24/02 02:09:05	92.398
07/24/02 02:10:05	92.824
07/24/02 02:11:05	92.653
07/24/02 02:12:05	92.142
07/24/02 02:13:05	92.227
07/24/02 02:14:05	92.568
07/24/02 02:15:05	91.374
07/24/02 02:16:05	76.529
07/24/02 02:17:05	82.046
07/24/02 02:18:05	81.705
07/24/02 02:19:05	83.923
07/24/02 02:20:05	83.923
07/24/02 02:21:05	83.496
07/24/02 02:22:05	84.349
07/24/02 02:23:05	83.752
07/24/02 02:24:05	84.435
07/24/02 02:25:05	83.155
07/24/02 02:26:05	84.008
07/24/02 02:27:05	91.146
07/24/02 02:28:05	94.360
07/24/02 02:29:05	91.061
07/24/02 02:30:05	92.142
07/24/02 02:31:05	92.995
07/24/02 02:32:05	91.715
07/24/02 02:33:05	92.227
07/24/02 02:34:05	92.142
07/24/02 02:35:05	92.142
07/24/02 02:36:05	92.483
07/24/02 02:37:05	91.459
07/24/02 02:38:05	92.227
07/24/02 02:39:05	92.142
07/24/02 02:40:05	91.630
07/24/02 02:41:05	91.630
07/24/02 02:42:05	92.056
07/24/02 02:43:05	92.056
07/24/02 02:44:05	92.653
07/24/02 02:45:05	92.312
07/24/02 02:46:05	92.653
07/24/02 02:47:05	92.056
07/24/02 02:48:05	92.056
07/24/02 02:49:05	92.398

Date Time	Pres (PSI)
07/24/02 02:50:05	92.398
07/24/02 02:51:05	90.634
07/24/02 02:52:05	91.544
07/24/02 02:53:05	91.288
07/24/02 02:54:05	91.232
07/24/02 02:55:05	91.288
07/24/02 02:56:05	91.630
07/24/02 02:57:05	91.886
07/24/02 02:58:05	95.128
07/24/02 02:59:05	91.715
07/24/02 03:00:05	93.848
07/24/02 03:01:05	92.739
07/24/02 03:02:05	92.824
07/24/02 03:03:05	93.080
07/24/02 03:04:05	93.165
07/24/02 03:05:05	92.653
07/24/02 03:06:05	93.080
07/24/02 03:07:05	92.568
07/24/02 03:08:05	92.739
07/24/02 03:09:05	92.056
07/24/02 03:10:05	92.824
07/24/02 03:11:05	92.824
07/24/02 03:12:05	92.995
07/24/02 03:13:05	92.312
07/24/02 03:14:05	92.568
07/24/02 03:15:05	92.568
07/24/02 03:16:05	91.800
07/24/02 03:17:05	92.824
07/24/02 03:18:05	92.312
07/24/02 03:19:05	92.568
07/24/02 03:20:05	91.971
07/24/02 03:21:05	92.824
07/24/02 03:22:05	92.483
07/24/02 03:23:05	92.142
07/24/02 03:24:05	92.568
07/24/02 03:25:05	92.312
07/24/02 03:26:05	92.056
07/24/02 03:27:05	92.653
07/24/02 03:28:05	92.056
07/24/02 03:29:05	92.056
07/24/02 03:30:05	92.909
07/24/02 03:31:05	92.398
07/24/02 03:32:05	93.165
07/24/02 03:33:05	92.483
07/24/02 03:34:05	92.824
07/24/02 03:35:05	91.971
07/24/02 03:36:05	92.909
07/24/02 03:37:05	92.653
07/24/02 03:38:05	92.568
07/24/02 03:39:05	92.995
07/24/02 03:40:05	93.080
07/24/02 03:41:05	92.909
07/24/02 03:42:05	92.568
07/24/02 03:43:05	92.824
07/24/02 03:44:05	92.739
07/24/02 03:45:05	93.336
07/24/02 03:46:05	93.165
07/24/02 03:47:05	93.080
07/24/02 03:48:05	93.165
07/24/02 03:49:05	91.886
07/24/02 03:50:05	92.483
07/24/02 03:51:05	92.909
07/24/02 03:52:05	92.483
07/24/02 03:53:05	92.909
07/24/02 03:54:05	92.227
07/24/02 03:55:05	82.643

CHEATHAM AND MCGHEHEE - NO. 7490 cont.

Date	Time	Pres (PSI)
07/24/02	03:56:05	82.387
07/24/02	03:57:05	83.923
07/24/02	03:58:05	89.696
07/24/02	03:59:05	92.909
07/24/02	04:00:05	90.037
07/24/02	04:01:05	90.890
07/24/02	04:02:05	91.061
07/24/02	04:03:05	90.549
07/24/02	04:04:05	90.208
07/24/02	04:05:05	90.037
07/24/02	04:06:05	90.378
07/24/02	04:07:05	88.757
07/24/02	04:08:05	90.037
07/24/02	04:09:05	89.781
07/24/02	04:10:05	89.866
07/24/02	04:11:05	90.122
07/24/02	04:12:05	89.781
07/24/02	04:13:05	90.208
07/24/02	04:14:05	90.378
07/24/02	04:15:05	90.890
07/24/02	04:16:05	89.269
07/24/02	04:17:05	89.781
07/24/02	04:18:05	89.611
07/24/02	04:19:05	89.866
07/24/02	04:20:05	90.378
07/24/02	04:21:05	90.037
07/24/02	04:22:05	89.952
07/24/02	04:23:05	90.634
07/24/02	04:24:05	90.293
07/24/02	04:25:05	90.293
07/24/02	04:26:05	90.208
07/24/02	04:27:05	90.378
07/24/02	04:28:05	89.611
07/24/02	04:29:05	89.611
07/24/02	04:30:05	89.013
07/24/02	04:31:05	89.696
07/24/02	04:32:05	89.013
07/24/02	04:33:05	89.099
07/24/02	04:34:05	89.184
07/24/02	04:35:05	90.976
07/24/02	04:36:05	90.464
07/24/02	04:37:05	90.293
07/24/02	04:38:05	90.805
07/24/02	04:39:05	91.459
07/24/02	04:40:05	91.374
07/24/02	04:41:05	90.805
07/24/02	04:42:05	91.061
07/24/02	04:43:05	90.890
07/24/02	04:44:05	90.720
07/24/02	04:45:05	91.061
07/24/02	04:46:05	90.976
07/24/02	04:47:05	91.061
07/24/02	04:48:05	90.208
07/24/02	04:49:05	90.805
07/24/02	04:50:05	90.890
07/24/02	04:51:05	90.464
07/24/02	04:52:05	90.634
07/24/02	04:53:05	90.976
07/24/02	04:54:05	89.611
07/24/02	04:55:05	90.464
07/24/02	04:56:05	91.146
07/24/02	04:57:05	91.459
07/24/02	04:58:05	90.549
07/24/02	04:59:05	89.440
07/24/02	05:00:05	90.208
07/24/02	05:01:05	62.196
07/24/02	05:02:05	83.837
07/24/02	05:03:05	84.861
07/24/02	05:04:05	83.667
07/24/02	05:05:05	84.264
07/24/02	05:06:05	83.240
07/24/02	05:07:05	84.093
07/24/02	05:08:05	84.520
07/24/02	05:09:05	84.776
07/24/02	05:10:05	84.520
07/24/02	05:11:05	76.614
07/24/02	05:12:05	86.624
07/24/02	05:13:05	87.307
07/24/02	05:14:05	86.966
07/24/02	05:15:05	87.136
07/24/02	05:16:05	87.051
07/24/02	05:17:05	86.710
07/24/02	05:18:05	89.099
07/24/02	05:19:05	92.909
07/24/02	05:20:05	89.184
07/24/02	05:21:05	89.866
07/24/02	05:22:05	92.653
07/24/02	05:23:05	91.374
07/24/02	05:24:05	92.056
07/24/02	05:25:05	91.544
07/24/02	05:26:05	91.800
07/24/02	05:27:05	91.800
07/24/02	05:28:05	92.227
07/24/02	05:29:05	91.800
07/24/02	05:30:05	92.398
07/24/02	05:31:05	92.312
07/24/02	05:32:05	92.995
07/24/02	05:33:05	92.142
07/24/02	05:34:05	92.056
07/24/02	05:35:05	91.544
07/24/02	05:36:05	91.544
07/24/02	05:37:05	92.227
07/24/02	05:38:05	91.800
07/24/02	05:39:05	91.886
07/24/02	05:40:05	91.630
07/24/02	05:41:05	91.715
07/24/02	05:42:05	91.459
07/24/02	05:43:05	92.653
07/24/02	05:44:05	91.715
07/24/02	05:45:05	91.288
07/24/02	05:46:05	92.312
07/24/02	05:47:05	90.890
07/24/02	05:48:05	92.312
07/24/02	05:49:05	91.232
07/24/02	05:50:05	92.483
07/24/02	05:51:05	91.459
07/24/02	05:52:05	93.165
07/24/02	05:53:05	90.720
07/24/02	05:54:05	90.805
07/24/02	05:55:05	91.800
07/24/02	05:56:05	91.971
07/24/02	05:57:05	89.781
07/24/02	05:58:05	91.232
07/24/02	05:59:05	89.866
07/24/02	06:00:05	91.232
07/24/02	06:01:05	90.634
07/24/02	06:02:05	90.549
07/24/02	06:03:05	90.378
07/24/02	06:04:05	90.464
07/24/02	06:05:05	91.061
07/24/02	06:06:05	91.288
07/24/02	06:07:05	90.122
07/24/02	06:08:05	90.208
07/24/02	06:09:05	90.634
07/24/02	06:10:05	90.122
07/24/02	06:11:05	89.866
07/24/02	06:12:05	89.269
07/24/02	06:13:05	89.099
07/24/02	06:14:05	90.634
07/24/02	06:15:05	89.525
07/24/02	06:16:05	89.696
07/24/02	06:17:05	90.805
07/24/02	06:18:05	89.952
07/24/02	06:19:05	90.890
07/24/02	06:20:05	91.232
07/24/02	06:21:05	89.696
07/24/02	06:22:05	89.696
07/24/02	06:23:05	89.355
07/24/02	06:24:05	88.501
07/24/02	06:25:05	90.378
07/24/02	06:26:05	90.208
07/24/02	06:27:05	89.781
07/24/02	06:28:05	89.696
07/24/02	06:29:05	89.440
07/24/02	06:30:05	90.037
07/24/02	06:31:05	88.160
07/24/02	06:32:05	89.355
07/24/02	06:33:05	89.013
07/24/02	06:34:05	89.440
07/24/02	06:35:05	90.720
07/24/02	06:36:05	88.928
07/24/02	06:37:05	90.122
07/24/02	06:38:05	89.866
07/24/02	06:39:05	88.928
07/24/02	06:40:05	89.184
07/24/02	06:41:05	89.952
07/24/02	06:42:05	90.549
07/24/02	06:43:05	89.269
07/24/02	06:44:05	90.464
07/24/02	06:45:05	90.890
07/24/02	06:46:05	89.781
07/24/02	06:47:05	89.866
07/24/02	06:48:05	91.146
07/24/02	06:49:05	90.634
07/24/02	06:50:05	90.464
07/24/02	06:51:05	90.037
07/24/02	06:52:05	90.378
07/24/02	06:53:05	89.781
07/24/02	06:54:05	89.355
07/24/02	06:55:05	90.037
07/24/02	06:56:05	90.890
07/24/02	06:57:05	88.672
07/24/02	06:58:05	90.805
07/24/02	06:59:05	90.122
07/24/02	07:00:05	90.293
07/24/02	07:01:05	88.587
07/24/02	07:02:05	89.525
07/24/02	07:03:05	89.440
07/24/02	07:04:05	88.501
07/24/02	07:05:05	88.843
07/24/02	07:06:05	88.843
07/24/02	07:07:05	88.501
07/24/02	07:08:05	89.696
07/24/02	07:09:05	89.184
07/24/02	07:10:05	89.525
07/24/02	07:11:05	87.478
07/24/02	07:12:05	87.222
07/24/02	07:13:05	87.990
07/24/02	07:14:05	88.160
07/24/02	07:15:05	87.392
07/24/02	07:16:05	86.454
07/24/02	07:17:05	87.307
07/24/02	07:18:05	87.307
07/24/02	07:19:05	87.563
07/24/02	07:20:05	85.714
07/24/02	07:21:05	87.136
07/24/02	07:22:05	85.800
07/24/02	07:23:05	88.160
07/24/02	07:24:05	87.563
07/24/02	07:25:05	85.117
07/24/02	07:26:05	87.648
07/24/02	07:27:05	88.331
07/24/02	07:28:05	88.245
07/24/02	07:29:05	86.539
07/24/02	07:30:05	86.454
07/24/02	07:31:05	87.648
07/24/02	07:32:05	87.392
07/24/02	07:33:05	86.966
07/24/02	07:34:05	85.942
07/24/02	07:35:05	87.819
07/24/02	07:36:05	87.819
07/24/02	07:37:05	87.648
07/24/02	07:38:05	88.587
07/24/02	07:39:05	87.392
07/24/02	07:40:05	87.051
07/24/02	07:41:05	90.293
07/24/02	07:42:05	89.013
07/24/02	07:43:05	88.501
07/24/02	07:44:05	88.928
07/24/02	07:45:05	88.416
07/24/02	07:46:05	89.184
07/24/02	07:47:05	88.672
07/24/02	07:48:05	88.587
07/24/02	07:49:05	87.990
07/24/02	07:50:05	88.928
07/24/02	07:51:05	88.843
07/24/02	07:52:05	89.013
07/24/02	07:53:05	89.781
07/24/02	07:54:05	90.464
07/24/02	07:55:05	89.184
07/24/02	07:56:05	88.672
07/24/02	07:57:05	89.696
07/24/02	07:58:05	89.013
07/24/02	07:59:05	89.269
07/24/02	08:00:05	88.928
07/24/02	08:01:05	89.866
07/24/02	08:02:05	82.387
07/24/02	08:03:05	80.681
07/24/02	08:04:05	81.193
07/24/02	08:05:05	89.866
07/24/02	08:06:05	80.851
07/24/02	08:07:05	81.278
07/24/02	08:08:05	80.595
07/24/02	08:09:05	81.705
07/24/02	08:10:05	105.309
07/24/02	08:11:05	80.595
07/24/02	08:12:05	81.449
07/24/02	08:13:05	80.453
07/24/02	08:14:05	121.775
07/24/02	08:15:05	80.027
07/24/02	08:16:05	79.515
07/24/02	08:17:05	77.808
07/24/02	08:18:05	86.027
07/24/02	08:19:05	83.411

CHEATHAM AND MCGHEHEE - NO. 7490 cont.

Date	Time	Pres (PSI)
07/24/02	08:20:05	84.435
07/24/02	08:21:05	87.734
07/24/02	08:22:05	87.478
07/24/02	08:23:05	79.685
07/24/02	08:24:05	71.268
07/24/02	08:25:05	75.164
07/24/02	08:26:05	72.974
07/24/02	08:27:05	71.950
07/24/02	08:28:05	70.414
07/24/02	08:29:05	82.387
07/24/02	08:30:05	89.269
07/24/02	08:31:05	87.392
07/24/02	08:32:05	84.861
07/24/02	08:33:05	86.539
07/24/02	08:34:05	86.880
07/24/02	08:35:05	85.373
07/24/02	08:36:05	86.113
07/24/02	08:37:05	86.198
07/24/02	08:38:05	84.349
07/24/02	08:39:05	85.800
07/24/02	08:40:05	86.027
07/24/02	08:41:05	85.117
07/24/02	08:42:05	86.624
07/24/02	08:43:05	86.283
07/24/02	08:44:05	86.027
07/24/02	08:45:05	87.648
07/24/02	08:46:05	83.326
07/24/02	08:47:05	83.326
07/24/02	08:48:05	83.667
07/24/02	08:49:05	84.179
07/24/02	08:50:05	82.302
07/24/02	08:51:05	82.814
07/24/02	08:52:05	82.046
07/24/02	08:53:05	82.387
07/24/02	08:54:05	81.449
07/24/02	08:55:05	80.851
07/24/02	08:56:05	82.814
07/24/02	08:57:05	83.923
07/24/02	08:58:05	82.984
07/24/02	08:59:05	87.222
07/24/02	09:00:05	84.605
07/24/02	09:01:05	84.520
07/24/02	09:02:05	84.093
07/24/02	09:03:05	91.800
07/24/02	09:04:05	84.947
07/24/02	09:05:05	85.714
07/24/02	09:06:05	86.624
07/24/02	09:07:05	87.478
07/24/02	09:08:05	86.624
07/24/02	09:09:05	85.288
07/24/02	09:10:05	87.990
07/24/02	09:11:05	87.990
07/24/02	09:12:05	88.160
07/24/02	09:13:05	85.800
07/24/02	09:14:05	85.714
07/24/02	09:15:05	87.307
07/24/02	09:16:05	85.942
07/24/02	09:17:05	86.624
07/24/02	09:18:05	86.539
07/24/02	09:19:05	84.776
07/24/02	09:20:05	83.923
07/24/02	09:21:05	77.041
07/24/02	09:22:05	80.937
07/24/02	09:23:05	78.918
07/24/02	09:24:05	79.429
07/24/02	09:25:05	79.174
07/24/02	09:26:05	79.344
07/24/02	09:27:05	78.662
07/24/02	09:28:05	75.107
07/24/02	09:29:05	75.931
07/24/02	09:30:05	77.723
07/24/02	09:31:05	77.126
07/24/02	09:32:05	77.467
07/24/02	09:33:05	76.699
07/24/02	09:34:05	79.429
07/24/02	09:35:05	79.429
07/24/02	09:36:05	79.685
07/24/02	09:37:05	78.662
07/24/02	09:38:05	79.771
07/24/02	09:39:05	79.003
07/24/02	09:40:05	78.491
07/24/02	09:41:05	80.510
07/24/02	09:42:05	79.771
07/24/02	09:43:05	85.032
07/24/02	09:44:05	86.880
07/24/02	09:45:05	86.454
07/24/02	09:46:05	86.624
07/24/02	09:47:05	85.942
07/24/02	09:48:05	86.283
07/24/02	09:49:05	86.966
07/24/02	09:50:05	87.734
07/24/02	09:51:05	86.880
07/24/02	09:52:05	87.136
07/24/02	09:53:05	86.113
07/24/02	09:54:05	85.942
07/24/02	09:55:05	87.136
07/24/02	09:56:05	86.539
07/24/02	09:57:05	86.369
07/24/02	09:58:05	85.032
07/24/02	09:59:05	86.795
07/24/02	10:00:05	85.373
07/24/02	10:01:05	86.198
07/24/02	10:02:05	84.605
07/24/02	10:03:05	86.539
07/24/02	10:04:05	87.478
07/24/02	10:05:05	86.369
07/24/02	10:06:05	70.585
07/24/02	10:07:05	71.609
07/24/02	10:08:05	72.377
07/24/02	10:09:05	72.718
07/24/02	10:10:05	73.998
07/24/02	10:11:05	71.865
07/24/02	10:12:05	73.486
07/24/02	10:13:05	74.424
07/24/02	10:14:05	72.803
07/24/02	10:15:05	73.742
07/24/02	10:16:05	70.500
07/24/02	10:17:05	69.902
07/24/02	10:18:05	71.353
07/24/02	10:19:05	70.158
07/24/02	10:20:05	70.329
07/24/02	10:21:05	70.073
07/24/02	10:22:05	69.504
07/24/02	10:23:05	75.021
07/24/02	10:24:05	84.093
07/24/02	10:25:05	89.866
07/24/02	10:26:05	84.349
07/24/02	10:27:05	85.714
07/24/02	10:28:05	86.198
07/24/02	10:29:05	86.027
07/24/02	10:30:05	84.947
07/24/02	10:31:05	85.629
07/24/02	10:32:05	86.966
07/24/02	10:33:05	87.136
07/24/02	10:34:05	85.885
07/24/02	10:35:05	85.203
07/24/02	10:36:05	84.435
07/24/02	10:37:05	86.624
07/24/02	10:38:05	85.032
07/24/02	10:39:05	85.544
07/24/02	10:40:05	85.885
07/24/02	10:41:05	85.288
07/24/02	10:42:05	84.605
07/24/02	10:43:05	85.373
07/24/02	10:44:05	86.369
07/24/02	10:45:05	85.032
07/24/02	10:46:05	85.714
07/24/02	10:47:05	84.349
07/24/02	10:48:05	83.496
07/24/02	10:49:05	86.539
07/24/02	10:50:05	85.885
07/24/02	10:51:05	86.966
07/24/02	10:52:05	86.113
07/24/02	10:53:05	84.093
07/24/02	10:54:05	82.216
07/24/02	10:55:05	84.008
07/24/02	10:56:05	84.179
07/24/02	10:57:05	84.691
07/24/02	10:58:05	86.454
07/24/02	10:59:05	86.539
07/24/02	11:00:05	86.539
07/24/02	11:01:05	49.540
07/24/02	11:02:05	64.812
07/24/02	11:03:05	40.127
07/24/02	11:04:05	46.156
07/24/02	11:05:05	46.753
07/24/02	11:06:05	45.985
07/24/02	11:07:05	46.668
07/24/02	11:08:05	46.241
07/24/02	11:09:05	45.303
07/24/02	11:10:05	46.156
07/24/02	11:11:05	45.644
07/24/02	11:12:05	44.791
07/24/02	11:13:05	44.706
07/24/02	11:14:05	44.194
07/24/02	11:15:05	43.767
07/24/02	11:16:05	43.853
07/24/02	11:17:05	43.341
07/24/02	11:18:05	43.511
07/24/02	11:19:05	44.279
07/24/02	11:20:05	44.620
07/24/02	11:21:05	45.047
07/24/02	11:22:05	51.332
07/24/02	11:23:05	52.868
07/24/02	11:24:05	55.569
07/24/02	11:25:05	58.044
07/24/02	11:26:05	61.001
07/24/02	11:27:05	65.921
07/24/02	11:28:05	76.187
07/24/02	11:29:05	83.496
07/24/02	11:30:05	84.093
07/24/02	11:31:05	84.179
07/24/02	11:32:05	82.728
07/24/02	11:33:05	83.667
07/24/02	11:34:05	85.288
07/24/02	11:35:05	82.899
07/24/02	11:36:05	82.984
07/24/02	11:37:05	84.776
07/24/02	11:38:05	86.795
07/24/02	11:39:05	83.582
07/24/02	11:40:05	84.349
07/24/02	11:41:05	84.691
07/24/02	11:42:05	85.885
07/24/02	11:43:05	86.369
07/24/02	11:44:05	85.544
07/24/02	11:45:05	85.629
07/24/02	11:46:05	85.373
07/24/02	11:47:05	84.520
07/24/02	11:48:05	84.861
07/24/02	11:49:05	85.544
07/24/02	11:50:05	84.861
07/24/02	11:51:05	84.349
07/24/02	11:52:05	85.714
07/24/02	11:53:05	85.373
07/24/02	11:54:05	85.458
07/24/02	11:55:05	86.369
07/24/02	11:56:05	86.539
07/24/02	11:57:05	85.203
07/24/02	11:58:05	82.728
07/24/02	11:59:05	85.885
07/24/02	12:00:05	84.861
07/24/02	12:01:05	85.373
07/24/02	12:02:05	83.837
07/24/02	12:03:05	84.520
07/24/02	12:04:05	85.117
07/24/02	12:05:05	85.032
07/24/02	12:06:05	84.179
07/24/02	12:07:05	84.179
07/24/02	12:08:05	84.520
07/24/02	12:09:05	85.629
07/24/02	12:10:05	85.942
07/24/02	12:11:05	83.752
07/24/02	12:12:05	82.216
07/24/02	12:13:05	83.326
07/24/02	12:14:05	83.240
07/24/02	12:15:05	82.387
07/24/02	12:16:05	67.115
07/24/02	12:17:05	48.346
07/24/02	12:18:05	62.452
07/24/02	12:19:05	64.641
07/24/02	12:20:05	78.832
07/24/02	12:21:05	88.672
07/24/02	12:22:05	87.734
07/24/02	12:23:05	83.923
07/24/02	12:24:05	82.131
07/24/02	12:25:05	84.349
07/24/02	12:26:05	83.837
07/24/02	12:27:05	81.790
07/24/02	12:28:05	82.643
07/24/02	12:29:05	83.752
07/24/02	12:30:05	81.790
07/24/02	12:31:05	83.496
07/24/02	12:32:05	84.264
07/24/02	12:33:05	84.861
07/24/02	12:34:05	82.216
07/24/02	12:35:05	84.520
07/24/02	12:36:05	83.752
07/24/02	12:37:05	84.093
07/24/02	12:38:05	82.643
07/24/02	12:39:05	83.667
07/24/02	12:40:05	82.728
07/24/02	12:41:05	84.179
07/24/02	12:42:05	83.582
07/24/02	12:43:05	83.837

CHEATHAM AND MCGHEHEE - NO. 7490 cont.

Date	Time	Pres (PSI)
07/24/02	12:44:05	83.155
07/24/02	12:45:05	82.302
07/24/02	12:46:05	80.851
07/24/02	12:47:05	83.923
07/24/02	12:48:05	82.814
07/24/02	12:49:05	82.728
07/24/02	12:50:05	82.558
07/24/02	12:51:05	83.752
07/24/02	12:52:05	83.240
07/24/02	12:53:05	83.326
07/24/02	12:54:05	82.302
07/24/02	12:55:05	81.875
07/24/02	12:56:05	83.240
07/24/02	12:57:05	84.093
07/24/02	12:58:05	82.899
07/24/02	12:59:05	85.885
07/24/02	13:00:05	80.595
07/24/02	13:01:05	80.681
07/24/02	13:02:05	79.174
07/24/02	13:03:05	78.662
07/24/02	13:04:05	80.027
07/24/02	13:05:05	79.344
07/24/02	13:06:05	79.856
07/24/02	13:07:05	79.685
07/24/02	13:08:05	79.600
07/24/02	13:09:05	78.662
07/24/02	13:10:05	81.278
07/24/02	13:11:05	78.406
07/24/02	13:12:05	78.576
07/24/02	13:13:05	78.576
07/24/02	13:14:05	81.705
07/24/02	13:15:05	80.766
07/24/02	13:16:05	80.368
07/24/02	13:17:05	83.070
07/24/02	13:18:05	83.667
07/24/02	13:19:05	80.453
07/24/02	13:20:05	79.856
07/24/02	13:21:05	80.937
07/24/02	13:22:05	79.941
07/24/02	13:23:05	83.582
07/24/02	13:24:05	84.008
07/24/02	13:25:05	87.051
07/24/02	13:26:05	84.605
07/24/02	13:27:05	83.582
07/24/02	13:28:05	81.534
07/24/02	13:29:05	82.131
07/24/02	13:30:05	82.984
07/24/02	13:31:05	82.728
07/24/02	13:32:05	81.961
07/24/02	13:33:05	87.734
07/24/02	13:34:05	82.984
07/24/02	13:35:05	82.046
07/24/02	13:36:05	82.643
07/24/02	13:37:05	83.070
07/24/02	13:38:05	82.814
07/24/02	13:39:05	84.349
07/24/02	13:40:05	82.216
07/24/02	13:41:05	83.667
07/24/02	13:42:05	83.923
07/24/02	13:43:05	79.003
07/24/02	13:44:05	78.576
07/24/02	13:45:05	80.368
07/24/02	13:46:05	82.216
07/24/02	13:47:05	81.107
07/24/02	13:48:05	81.961
07/24/02	13:49:05	84.861
07/24/02	13:50:05	82.814
07/24/02	13:51:05	82.814
07/24/02	13:52:05	83.411
07/24/02	13:53:05	83.240
07/24/02	13:54:05	83.411
07/24/02	13:55:05	81.875
07/24/02	13:56:05	82.131
07/24/02	13:57:05	83.667
07/24/02	13:58:05	82.387
07/24/02	13:59:05	82.472
07/24/02	14:00:05	83.070
07/24/02	14:01:05	83.155
07/24/02	14:02:05	81.961
07/24/02	14:03:05	83.923
07/24/02	14:04:05	82.558
07/24/02	14:05:05	83.667
07/24/02	14:06:05	83.070
07/24/02	14:07:05	84.179
07/24/02	14:08:05	81.022
07/24/02	14:09:05	81.278
07/24/02	14:10:05	82.558
07/24/02	14:11:05	81.534
07/24/02	14:12:05	82.387
07/24/02	14:13:05	81.363
07/24/02	14:14:05	81.705
07/24/02	14:15:05	83.667
07/24/02	14:16:05	81.961
07/24/02	14:17:05	80.283
07/24/02	14:18:05	81.363
07/24/02	14:19:05	81.278
07/24/02	14:20:05	82.558
07/24/02	14:21:05	81.705
07/24/02	14:22:05	82.131
07/24/02	14:23:05	-2.702
07/24/02	14:24:05	-2.787
07/24/02	14:25:05	-2.787
07/24/02	14:26:05	-2.702
07/24/02	14:27:05	-2.702
07/24/02	14:28:05	-2.616
07/24/02	14:29:05	-2.616
07/24/02	14:30:05	-2.616
07/24/02	14:31:05	-2.531
07/24/02	14:32:05	-2.531
07/24/02	14:33:05	-2.446
07/24/02	14:34:05	-2.531
07/24/02	14:35:05	-2.446
07/24/02	14:36:05	-2.446
07/24/02	14:37:05	-2.446
07/24/02	14:38:05	-2.446
07/24/02	14:39:05	-2.360
07/24/02	14:40:05	-2.360
07/24/02	14:41:05	-2.275
07/24/02	14:42:05	-2.275
07/24/02	14:43:05	-2.275
07/24/02	14:44:05	-2.275
07/24/02	14:45:05	-2.275
07/24/02	14:46:05	-2.190
07/24/02	14:47:05	-2.275
07/24/02	14:48:05	-2.275
07/24/02	14:49:05	-2.190
07/24/02	14:50:05	-2.104
07/24/02	14:51:05	-2.190
07/24/02	14:52:05	-2.190
07/24/02	14:53:05	-2.104
07/24/02	14:54:05	-2.190
07/24/02	14:55:05	-2.104
07/24/02	14:56:05	-2.104
07/24/02	14:57:05	-2.019
07/24/02	14:58:05	-2.019
07/24/02	14:59:05	-1.934
07/24/02	15:00:05	-2.019
07/24/02	15:01:05	-2.019
07/24/02	15:02:05	-2.019
07/24/02	15:03:05	-1.934
07/24/02	15:04:05	-1.934
07/24/02	15:05:05	-1.934
07/24/02	15:06:05	-1.934
07/24/02	15:07:05	-1.849
07/24/02	15:08:05	-1.849
07/24/02	15:09:05	-1.849
07/24/02	15:10:05	-1.849
07/24/02	15:11:05	-1.849
07/24/02	15:12:05	-1.763
07/24/02	15:13:05	-1.763
07/24/02	15:14:05	-1.763
07/24/02	15:15:05	-1.849
07/24/02	15:16:05	-1.763
07/24/02	15:17:05	-1.763
07/24/02	15:18:05	-1.763
07/24/02	15:19:05	-1.763
07/24/02	15:20:05	-1.763
07/24/02	15:21:05	-1.763
07/24/02	15:22:05	-1.763
07/24/02	15:23:05	-1.763
07/24/02	15:24:05	-1.763
07/24/02	15:25:05	-1.763
07/24/02	15:26:05	-1.763
07/24/02	15:27:05	-1.763
07/24/02	15:28:05	-1.763
07/24/02	15:29:05	-1.763
07/24/02	15:30:05	-1.678
07/24/02	15:31:05	-1.678
07/24/02	15:32:05	-1.678
07/24/02	15:33:05	-1.678
07/24/02	15:34:05	-1.763
07/24/02	15:35:05	-1.763
07/24/02	15:36:05	-1.678
07/24/02	15:37:05	-1.678
07/24/02	15:38:05	-1.678
07/24/02	15:39:05	-1.763
07/24/02	15:40:05	-1.763
07/24/02	15:41:05	-1.678
07/24/02	15:42:05	-1.678
07/24/02	15:43:05	-1.678
07/24/02	15:44:05	-1.678
07/24/02	15:45:05	-1.678
07/24/02	15:46:05	-1.678
07/24/02	15:47:05	-1.678
07/24/02	15:48:05	-1.678
07/24/02	15:49:05	-1.593
07/24/02	15:50:05	-1.593
07/24/02	15:51:05	-1.593
07/24/02	15:52:05	-1.593
07/24/02	15:53:05	-1.678
07/24/02	15:54:05	-1.678
07/24/02	15:55:05	-1.593
07/24/02	15:56:05	-1.593
07/24/02	15:57:05	-1.593
07/24/02	15:58:05	-1.593
07/24/02	15:59:05	-1.593
07/24/02	16:00:05	-1.593
07/24/02	16:01:05	-1.593
07/24/02	16:02:05	-1.593
07/24/02	16:03:05	-1.593
07/24/02	16:04:05	-1.593
07/24/02	16:05:05	-1.593
07/24/02	16:06:05	-1.593
07/24/02	16:07:05	-1.593
07/24/02	16:08:05	-1.593
07/24/02	16:09:05	-1.507
07/24/02	16:10:05	-1.507
07/24/02	16:11:05	-1.593
07/24/02	16:12:05	-1.593
07/24/02	16:13:05	-1.593
07/24/02	16:14:05	-1.593
07/24/02	16:15:05	-1.593
07/24/02	16:16:05	-1.593
07/24/02	16:17:05	-1.593
07/24/02	16:18:05	-1.593
07/24/02	16:19:05	-1.593
07/24/02	16:20:05	-1.593
07/24/02	16:21:05	-1.593
07/24/02	16:22:05	-1.593
07/24/02	16:23:05	-1.593
07/24/02	16:24:05	-1.593
07/24/02	16:25:05	-1.593
07/24/02	16:26:05	-1.593
07/24/02	16:27:05	-1.593
07/24/02	16:28:05	-1.593
07/24/02	16:29:05	-1.507
07/24/02	16:30:05	-1.593
07/24/02	16:31:05	-1.593
07/24/02	16:32:05	-1.593
07/24/02	16:33:05	-1.593
07/24/02	16:34:05	-1.593
07/24/02	16:35:05	-1.593
07/24/02	16:36:05	-1.593
07/24/02	16:37:05	-1.507
07/24/02	16:38:05	-1.593
07/24/02	16:39:05	-1.507
07/24/02	16:40:05	-1.507
07/24/02	16:41:05	-1.507
07/24/02	16:42:05	-1.507
07/24/02	16:43:05	-1.507
07/24/02	16:44:05	-1.507
07/24/02	16:45:05	-1.507
07/24/02	16:46:05	-1.507
07/24/02	16:47:05	-1.507
07/24/02	16:48:05	-1.507
07/24/02	16:49:05	-1.507
07/24/02	16:50:05	-1.507
07/24/02	16:51:05	-1.422
07/24/02	16:52:05	-1.422

CHESTNUT AND WALNUT - NO. 7488

Date	Time	Pres (PSI)
07/22/02	07:54:02	0.597
07/22/02	07:55:02	0.597
07/22/02	07:56:02	0.597
07/22/02	07:57:02	0.597
07/22/02	07:58:02	0.597
07/22/02	07:59:02	0.597
07/22/02	08:00:02	0.597
07/22/02	08:01:02	0.597
07/22/02	08:02:02	0.597
07/22/02	08:03:02	0.512
07/22/02	08:04:02	0.597
07/22/02	08:05:02	0.597
07/22/02	08:06:02	0.597
07/22/02	08:07:02	0.597
07/22/02	08:08:02	0.512
07/22/02	08:09:02	0.597
07/22/02	08:10:02	0.597
07/22/02	08:11:02	0.597
07/22/02	08:12:02	0.597
07/22/02	08:13:02	0.597
07/22/02	08:14:02	0.597
07/22/02	08:15:02	0.597
07/22/02	08:16:02	0.597
07/22/02	08:17:02	0.597
07/22/02	08:18:02	0.597
07/22/02	08:19:02	0.597
07/22/02	08:20:02	0.597
07/22/02	08:21:02	0.597
07/22/02	08:22:02	0.512
07/22/02	08:23:02	0.597
07/22/02	08:24:02	0.597
07/22/02	08:25:02	0.597
07/22/02	08:26:02	0.597
07/22/02	08:27:02	0.597
07/22/02	08:28:02	0.597
07/22/02	08:29:02	0.597
07/22/02	08:30:02	0.597
07/22/02	08:31:02	0.597
07/22/02	08:32:02	0.512
07/22/02	08:33:02	0.512
07/22/02	08:34:02	0.597
07/22/02	08:35:02	0.597
07/22/02	08:36:02	0.512
07/22/02	08:37:02	0.597
07/22/02	08:38:02	0.597
07/22/02	08:39:02	0.597
07/22/02	08:40:02	0.597
07/22/02	08:41:02	0.597
07/22/02	08:42:02	0.597
07/22/02	08:43:02	0.597
07/22/02	08:44:02	0.597
07/22/02	08:45:02	0.597
07/22/02	08:46:02	0.597
07/22/02	08:47:02	0.597
07/22/02	08:48:02	0.597
07/22/02	08:49:02	0.597
07/22/02	08:50:02	0.597
07/22/02	08:51:02	0.597
07/22/02	08:52:02	0.597
07/22/02	08:53:02	0.597
07/22/02	08:54:02	0.597
07/22/02	08:55:02	0.597
07/22/02	08:56:02	0.597
07/22/02	08:57:02	0.512
07/22/02	08:58:02	0.512
07/22/02	08:59:02	0.512
07/22/02	09:00:02	0.512
07/22/02	09:01:02	0.512
07/22/02	09:02:02	0.512
07/22/02	09:03:02	0.512
07/22/02	09:04:02	0.512
07/22/02	09:05:02	0.512
07/22/02	09:06:02	0.512
07/22/02	09:07:02	0.512
07/22/02	09:08:02	0.512
07/22/02	09:09:02	0.512
07/22/02	09:10:02	0.427
07/22/02	09:11:02	0.512
07/22/02	09:12:02	0.512
07/22/02	09:13:02	0.512
07/22/02	09:14:02	0.512
07/22/02	09:15:02	0.512
07/22/02	09:16:02	0.597
07/22/02	09:17:02	0.597
07/22/02	09:18:02	0.512
07/22/02	09:19:02	0.597
07/22/02	09:20:02	0.512
07/22/02	09:21:02	0.512
07/22/02	09:22:02	0.512
07/22/02	09:23:02	92.142
07/22/02	09:24:02	91.544
07/22/02	09:25:02	91.886
07/22/02	09:26:02	92.341
07/22/02	09:27:02	91.800
07/22/02	09:28:02	90.748
07/22/02	09:29:02	91.544
07/22/02	09:30:02	91.345
07/22/02	09:31:02	91.715
07/22/02	09:32:02	90.919
07/22/02	09:33:02	92.341
07/22/02	09:34:02	91.345
07/22/02	09:35:02	91.886
07/22/02	09:36:02	91.886
07/22/02	09:37:02	91.630
07/22/02	09:38:02	92.511
07/22/02	09:39:02	92.341
07/22/02	09:40:02	91.715
07/22/02	09:41:02	90.549
07/22/02	09:42:02	92.142
07/22/02	09:43:02	92.682
07/22/02	09:44:02	90.833
07/22/02	09:45:02	92.341
07/22/02	09:46:02	91.971
07/22/02	09:47:02	92.767
07/22/02	09:48:02	92.056
07/22/02	09:49:02	91.800
07/22/02	09:50:02	93.137
07/22/02	09:51:02	92.597
07/22/02	09:52:02	92.341
07/22/02	09:53:02	92.853
07/22/02	09:54:02	93.763
07/22/02	09:55:02	92.767
07/22/02	09:56:02	92.597
07/22/02	09:57:02	92.767
07/22/02	09:58:02	92.767
07/22/02	09:59:02	92.426
07/22/02	10:00:02	92.426
07/22/02	10:01:02	91.800
07/22/02	10:02:02	92.597
07/22/02	10:03:02	91.800
07/22/02	10:04:02	91.715
07/22/02	10:05:02	92.056
07/22/02	10:06:02	92.511
07/22/02	10:07:02	92.142
07/22/02	10:08:02	92.341
07/22/02	10:09:02	92.056
07/22/02	10:10:02	92.056
07/22/02	10:11:02	92.341
07/22/02	10:12:02	92.142
07/22/02	10:13:02	92.255
07/22/02	10:14:02	92.511
07/22/02	10:15:02	92.597
07/22/02	10:16:02	91.886
07/22/02	10:17:02	91.544
07/22/02	10:18:02	92.142
07/22/02	10:19:02	93.308
07/22/02	10:20:02	91.260
07/22/02	10:21:02	92.511
07/22/02	10:22:02	91.431
07/22/02	10:23:02	92.142
07/22/02	10:24:02	92.341
07/22/02	10:25:02	91.431
07/22/02	10:26:02	91.886
07/22/02	10:27:02	91.260
07/22/02	10:28:02	92.255
07/22/02	10:29:02	92.255
07/22/02	10:30:02	92.597
07/22/02	10:31:02	92.511
07/22/02	10:32:02	92.853
07/22/02	10:33:02	91.800
07/22/02	10:34:02	92.426
07/22/02	10:35:02	91.800
07/22/02	10:36:02	92.682
07/22/02	10:37:02	92.142
07/22/02	10:38:02	90.634
07/22/02	10:39:02	91.260
07/22/02	10:40:02	91.630
07/22/02	10:41:02	90.378
07/22/02	10:42:02	91.260
07/22/02	10:43:02	90.634
07/22/02	10:44:02	90.634
07/22/02	10:45:02	90.919
07/22/02	10:46:02	91.431
07/22/02	10:47:02	91.175
07/22/02	10:48:02	90.549
07/22/02	10:49:02	91.175
07/22/02	10:50:02	91.431
07/22/02	10:51:02	91.886
07/22/02	10:52:02	91.004
07/22/02	10:53:02	66.348
07/22/02	10:54:02	92.426
07/22/02	10:55:02	84.264
07/22/02	10:56:02	82.302
07/22/02	10:57:02	86.027
07/22/02	10:58:02	83.809
07/22/02	10:59:02	83.638
07/22/02	11:00:02	85.402
07/22/02	11:01:02	83.638
07/22/02	11:02:02	82.671
07/22/02	11:03:02	84.890
07/22/02	11:04:02	84.435
07/22/02	11:05:02	85.060
07/22/02	11:06:02	84.975
07/22/02	11:07:02	84.890
07/22/02	11:08:02	84.975
07/22/02	11:09:02	84.890
07/22/02	11:10:02	83.468
07/22/02	11:11:02	85.060
07/22/02	11:12:02	84.435
07/22/02	11:13:02	84.605
07/22/02	11:14:02	85.231
07/22/02	11:15:02	83.980
07/22/02	11:16:02	85.857
07/22/02	11:17:02	83.894
07/22/02	11:18:02	84.093
07/22/02	11:19:02	82.671
07/22/02	11:20:02	85.686
07/22/02	11:21:02	84.349
07/22/02	11:22:02	84.264
07/22/02	11:23:02	83.553
07/22/02	11:24:02	83.809
07/22/02	11:25:02	84.691
07/22/02	11:26:02	82.131
07/22/02	11:27:02	83.638
07/22/02	11:28:02	85.231
07/22/02	11:29:02	84.264
07/22/02	11:30:02	84.264
07/22/02	11:31:02	84.435
07/22/02	11:32:02	83.183
07/22/02	11:33:02	84.093
07/22/02	11:34:02	84.691
07/22/02	11:35:02	82.671
07/22/02	11:36:02	85.487
07/22/02	11:37:02	83.638
07/22/02	11:38:02	83.638
07/22/02	11:39:02	84.605
07/22/02	11:40:02	84.691
07/22/02	11:41:02	85.060
07/22/02	11:42:02	84.605
07/22/02	11:43:02	84.890
07/22/02	11:44:02	82.131
07/22/02	11:45:02	84.804
07/22/02	11:46:02	84.804
07/22/02	11:47:02	84.179
07/22/02	11:48:02	83.980
07/22/02	11:49:02	81.335
07/22/02	11:50:02	83.980
07/22/02	11:51:02	84.691
07/22/02	11:52:02	84.435
07/22/02	11:53:02	84.804
07/22/02	11:54:02	83.013
07/22/02	11:55:02	83.013
07/22/02	11:56:02	83.724
07/22/02	11:57:02	83.980
07/22/02	11:58:02	83.809
07/22/02	11:59:02	85.316
07/22/02	12:00:02	82.387
07/22/02	12:01:02	84.264
07/22/02	12:02:02	83.098
07/22/02	12:03:02	83.183
07/22/02	12:04:02	83.894
07/22/02	12:05:02	83.809
07/22/02	12:06:02	83.724
07/22/02	12:07:02	83.013
07/22/02	12:08:02	84.179
07/22/02	12:09:02	84.691
07/22/02	12:10:02	85.316
07/22/02	12:11:02	82.586
07/22/02	12:12:02	84.435
07/22/02	12:13:02	83.809
07/22/02	12:14:02	83.382
07/22/02	12:15:02	84.435
07/22/02	12:16:02	83.269
07/22/02	12:17:02	84.605

CHESTNUT AND WALNUT - NO. 7488 cont.

Date	Time	Pres (PSI)
07/22/02	12:18:02	83.382
07/22/02	12:19:02	83.638
07/22/02	12:20:02	84.435
07/22/02	12:21:02	83.809
07/22/02	12:22:02	84.093
07/22/02	12:23:02	82.472
07/22/02	12:24:02	84.264
07/22/02	12:25:02	84.264
07/22/02	12:26:02	82.757
07/22/02	12:27:02	84.605
07/22/02	12:28:02	82.927
07/22/02	12:29:02	83.382
07/22/02	12:30:02	83.724
07/22/02	12:31:02	83.724
07/22/02	12:32:02	83.183
07/22/02	12:33:02	84.264
07/22/02	12:34:02	83.382
07/22/02	12:35:02	83.553
07/22/02	12:36:02	83.638
07/22/02	12:37:02	83.809
07/22/02	12:38:02	82.927
07/22/02	12:39:02	84.179
07/22/02	12:40:02	83.468
07/22/02	12:41:02	83.894
07/22/02	12:42:02	84.804
07/22/02	12:43:02	83.183
07/22/02	12:44:02	82.927
07/22/02	12:45:02	84.179
07/22/02	12:46:02	83.638
07/22/02	12:47:02	82.927
07/22/02	12:48:02	82.927
07/22/02	12:49:02	83.183
07/22/02	12:50:02	82.842
07/22/02	12:51:02	83.809
07/22/02	12:52:02	82.927
07/22/02	12:53:02	83.183
07/22/02	12:54:02	82.927
07/22/02	12:55:02	82.927
07/22/02	12:56:02	84.890
07/22/02	12:57:02	83.724
07/22/02	12:58:02	84.093
07/22/02	12:59:02	84.520
07/22/02	13:00:02	81.335
07/22/02	13:01:02	83.980
07/22/02	13:02:02	82.131
07/22/02	13:03:02	84.093
07/22/02	13:04:02	82.216
07/22/02	13:05:02	84.093
07/22/02	13:06:02	83.553
07/22/02	13:07:02	82.216
07/22/02	13:08:02	80.880
07/22/02	13:09:02	83.183
07/22/02	13:10:02	82.927
07/22/02	13:11:02	83.980
07/22/02	13:12:02	83.468
07/22/02	13:13:02	84.435
07/22/02	13:14:02	82.927
07/22/02	13:15:02	82.472
07/22/02	13:16:02	84.179
07/22/02	13:17:02	83.638
07/22/02	13:18:02	83.269
07/22/02	13:19:02	84.093
07/22/02	13:20:02	84.179
07/22/02	13:21:02	83.183
07/22/02	13:22:02	83.269
07/22/02	13:23:02	83.553
07/22/02	13:24:02	83.269
07/22/02	13:25:02	83.013
07/22/02	13:26:02	91.971
07/22/02	13:27:02	80.880
07/22/02	13:28:02	85.231
07/22/02	13:29:02	85.146
07/22/02	13:30:02	84.179
07/22/02	13:31:02	85.771
07/22/02	13:32:02	84.605
07/22/02	13:33:02	85.231
07/22/02	13:34:02	85.316
07/22/02	13:35:02	85.771
07/22/02	13:36:02	85.316
07/22/02	13:37:02	85.060
07/22/02	13:38:02	86.027
07/22/02	13:39:02	84.264
07/22/02	13:40:02	84.605
07/22/02	13:41:02	85.771
07/22/02	13:42:02	84.605
07/22/02	13:43:02	85.942
07/22/02	13:44:02	83.098
07/22/02	13:45:02	84.804
07/22/02	13:46:02	85.146
07/22/02	13:47:02	84.804
07/22/02	13:48:02	85.601
07/22/02	13:49:02	84.520
07/22/02	13:50:02	85.146
07/22/02	13:51:02	84.520
07/22/02	13:52:02	84.890
07/22/02	13:53:02	84.890
07/22/02	13:54:02	85.316
07/22/02	13:55:02	84.804
07/22/02	13:56:02	85.316
07/22/02	13:57:02	82.302
07/22/02	13:58:02	84.691
07/22/02	13:59:02	84.691
07/22/02	14:00:02	84.349
07/22/02	14:01:02	86.824
07/22/02	14:02:02	84.890
07/22/02	14:03:02	84.804
07/22/02	14:04:02	84.804
07/22/02	14:05:02	86.909
07/22/02	14:06:02	84.435
07/22/02	14:07:02	85.686
07/22/02	14:08:02	85.686
07/22/02	14:09:02	84.975
07/22/02	14:10:02	84.605
07/22/02	14:11:02	85.402
07/22/02	14:12:02	84.179
07/22/02	14:13:02	83.183
07/22/02	14:14:02	85.402
07/22/02	14:15:02	84.520
07/22/02	14:16:02	86.113
07/22/02	14:17:02	85.601
07/22/02	14:18:02	84.890
07/22/02	14:19:02	84.435
07/22/02	14:20:02	85.857
07/22/02	14:21:02	84.975
07/22/02	14:22:02	85.487
07/22/02	14:23:02	84.691
07/22/02	14:24:02	85.487
07/22/02	14:25:02	85.402
07/22/02	14:26:02	84.804
07/22/02	14:27:02	84.975
07/22/02	14:28:02	84.605
07/22/02	14:29:02	85.231
07/22/02	14:30:02	84.520
07/22/02	14:31:02	84.435
07/22/02	14:32:02	84.691
07/22/02	14:33:02	85.686
07/22/02	14:34:02	85.146
07/22/02	14:35:02	85.231
07/22/02	14:36:02	84.691
07/22/02	14:37:02	84.605
07/22/02	14:38:02	84.691
07/22/02	14:39:02	84.890
07/22/02	14:40:02	84.975
07/22/02	14:41:02	85.771
07/22/02	14:42:02	84.435
07/22/02	14:43:02	83.638
07/22/02	14:44:02	86.198
07/22/02	14:45:02	86.312
07/22/02	14:46:02	84.605
07/22/02	14:47:02	84.890
07/22/02	14:48:02	84.179
07/22/02	14:49:02	83.183
07/22/02	14:50:02	84.179
07/22/02	14:51:02	84.890
07/22/02	14:52:02	85.402
07/22/02	14:53:02	85.060
07/22/02	14:54:02	85.316
07/22/02	14:55:02	85.771
07/22/02	14:56:02	85.487
07/22/02	14:57:02	85.060
07/22/02	14:58:02	85.316
07/22/02	14:59:02	85.601
07/22/02	15:00:02	84.804
07/22/02	15:01:02	83.468
07/22/02	15:02:02	84.975
07/22/02	15:03:02	84.975
07/22/02	15:04:02	85.857
07/22/02	15:05:02	84.804
07/22/02	15:06:02	85.146
07/22/02	15:07:02	85.686
07/22/02	15:08:02	83.269
07/22/02	15:09:02	84.804
07/22/02	15:10:02	83.894
07/22/02	15:11:02	84.691
07/22/02	15:12:02	85.487
07/22/02	15:13:02	85.942
07/22/02	15:14:02	84.804
07/22/02	15:15:02	85.060
07/22/02	15:16:02	84.975
07/22/02	15:17:02	85.060
07/22/02	15:18:02	84.093
07/22/02	15:19:02	83.894
07/22/02	15:20:02	84.435
07/22/02	15:21:02	85.316
07/22/02	15:22:02	85.487
07/22/02	15:23:02	85.857
07/22/02	15:24:02	83.724
07/22/02	15:25:02	84.804
07/22/02	15:26:02	85.231
07/22/02	15:27:02	85.487
07/22/02	15:28:02	85.146
07/22/02	15:29:02	85.771
07/22/02	15:30:02	83.809
07/22/02	15:31:02	83.724
07/22/02	15:32:02	85.402
07/22/02	15:33:02	85.146
07/22/02	15:34:02	85.402
07/22/02	15:35:02	82.586
07/22/02	15:36:02	84.975
07/22/02	15:37:02	85.231
07/22/02	15:38:02	83.553
07/22/02	15:39:02	84.975
07/22/02	15:40:02	86.027
07/22/02	15:41:02	84.520
07/22/02	15:42:02	84.691
07/22/02	15:43:02	85.402
07/22/02	15:44:02	84.520
07/22/02	15:45:02	84.435
07/22/02	15:46:02	86.027
07/22/02	15:47:02	84.520
07/22/02	15:48:02	84.804
07/22/02	15:49:02	84.605
07/22/02	15:50:02	82.757
07/22/02	15:51:02	84.349
07/22/02	15:52:02	85.601
07/22/02	15:53:02	85.146
07/22/02	15:54:02	85.601
07/22/02	15:55:02	84.349
07/22/02	15:56:02	85.316
07/22/02	15:57:02	84.691
07/22/02	15:58:02	85.942
07/22/02	15:59:02	84.691
07/22/02	16:00:02	83.894
07/22/02	16:01:02	84.804
07/22/02	16:02:02	84.179
07/22/02	16:03:02	86.113
07/22/02	16:04:02	84.093
07/22/02	16:05:02	85.060
07/22/02	16:06:02	84.264
07/22/02	16:07:02	84.605
07/22/02	16:08:02	85.942
07/22/02	16:09:02	84.890
07/22/02	16:10:02	85.942
07/22/02	16:11:02	84.691
07/22/02	16:12:02	85.060
07/22/02	16:13:02	85.316
07/22/02	16:14:02	83.809
07/22/02	16:15:02	83.809
07/22/02	16:16:02	85.231
07/22/02	16:17:02	85.857
07/22/02	16:18:02	85.060
07/22/02	16:19:02	85.060
07/22/02	16:20:02	84.264
07/22/02	16:21:02	83.724
07/22/02	16:22:02	85.316
07/22/02	16:23:02	83.468
07/22/02	16:24:02	83.894
07/22/02	16:25:02	84.605
07/22/02	16:26:02	85.231
07/22/02	16:27:02	84.435
07/22/02	16:28:02	85.060
07/22/02	16:29:02	84.264
07/22/02	16:30:02	84.691
07/22/02	16:31:02	83.553
07/22/02	16:32:02	85.601
07/22/02	16:33:02	85.601
07/22/02	16:34:02	84.435
07/22/02	16:35:02	85.060
07/22/02	16:36:02	84.264
07/22/02	16:37:02	86.312
07/22/02	16:38:02	84.435
07/22/02	16:39:02	85.771
07/22/02	16:40:02	84.605
07/22/02	16:41:02	85.402

CHESTNUT AND WALNUT - NO. 7488 cont.

Date	Time	Pres (PSI)
07/22/02	16:42:02	84.605
07/22/02	16:43:02	83.553
07/22/02	16:44:02	85.857
07/22/02	16:45:02	83.980
07/22/02	16:46:02	85.771
07/22/02	16:47:02	85.146
07/22/02	16:48:02	83.724
07/22/02	16:49:02	85.771
07/22/02	16:50:02	83.724
07/22/02	16:51:02	85.942
07/22/02	16:52:02	84.890
07/22/02	16:53:02	84.520
07/22/02	16:54:02	85.060
07/22/02	16:55:02	83.724
07/22/02	16:56:02	85.060
07/22/02	16:57:02	84.605
07/22/02	16:58:02	83.980
07/22/02	16:59:02	84.890
07/22/02	17:00:02	85.402
07/22/02	17:01:02	83.980
07/22/02	17:02:02	91.089
07/22/02	17:03:02	84.264
07/22/02	17:04:02	87.279
07/22/02	17:05:02	86.568
07/22/02	17:06:02	86.994
07/22/02	17:07:02	86.824
07/22/02	17:08:02	86.653
07/22/02	17:09:02	86.909
07/22/02	17:10:02	86.824
07/22/02	17:11:02	86.482
07/22/02	17:12:02	86.653
07/22/02	17:13:02	86.994
07/22/02	17:14:02	87.819
07/22/02	17:15:02	87.193
07/22/02	17:16:02	86.312
07/22/02	17:17:02	86.994
07/22/02	17:18:02	86.824
07/22/02	17:19:02	86.909
07/22/02	17:20:02	86.568
07/22/02	17:21:02	86.482
07/22/02	17:22:02	86.653
07/22/02	17:23:02	86.482
07/22/02	17:24:02	87.279
07/22/02	17:25:02	86.312
07/22/02	17:26:02	86.568
07/22/02	17:27:02	86.113
07/22/02	17:28:02	85.857
07/22/02	17:29:02	86.994
07/22/02	17:30:02	85.487
07/22/02	17:31:02	86.312
07/22/02	17:32:02	86.113
07/22/02	17:33:02	86.738
07/22/02	17:34:02	85.771
07/22/02	17:35:02	87.990
07/22/02	17:36:02	86.738
07/22/02	17:37:02	87.364
07/22/02	17:38:02	86.568
07/22/02	17:39:02	86.653
07/22/02	17:40:02	87.279
07/22/02	17:41:02	86.653
07/22/02	17:42:02	86.909
07/22/02	17:43:02	86.397
07/22/02	17:44:02	86.568
07/22/02	17:45:02	86.312
07/22/02	17:46:02	86.738
07/22/02	17:47:02	86.397
07/22/02	17:48:02	86.198
07/22/02	17:49:02	85.487
07/22/02	17:50:02	86.027
07/22/02	17:51:02	86.824
07/22/02	17:52:02	87.620
07/22/02	17:53:02	86.482
07/22/02	17:54:02	87.279
07/22/02	17:55:02	83.468
07/22/02	17:56:02	87.904
07/22/02	17:57:02	85.402
07/22/02	17:58:02	86.738
07/22/02	17:59:02	85.857
07/22/02	18:00:02	86.568
07/22/02	18:01:02	86.312
07/22/02	18:02:02	86.653
07/22/02	18:03:02	86.198
07/22/02	18:04:02	86.198
07/22/02	18:05:02	87.193
07/22/02	18:06:02	85.857
07/22/02	18:07:02	85.857
07/22/02	18:08:02	85.771
07/22/02	18:09:02	85.686
07/22/02	18:10:02	85.316
07/22/02	18:11:02	86.909
07/22/02	18:12:02	86.113
07/22/02	18:13:02	86.312
07/22/02	18:14:02	86.568
07/22/02	18:15:02	85.487
07/22/02	18:16:02	86.198
07/22/02	18:17:02	85.060
07/22/02	18:18:02	86.397
07/22/02	18:19:02	86.312
07/22/02	18:20:02	85.316
07/22/02	18:21:02	85.857
07/22/02	18:22:02	86.198
07/22/02	18:23:02	86.027
07/22/02	18:24:02	85.857
07/22/02	18:25:02	86.738
07/22/02	18:26:02	86.653
07/22/02	18:27:02	86.568
07/22/02	18:28:02	85.857
07/22/02	18:29:02	86.027
07/22/02	18:30:02	86.312
07/22/02	18:31:02	85.487
07/22/02	18:32:02	86.909
07/22/02	18:33:02	86.824
07/22/02	18:34:02	85.231
07/22/02	18:35:02	86.568
07/22/02	18:36:02	85.686
07/22/02	18:37:02	86.198
07/22/02	18:38:02	86.738
07/22/02	18:39:02	85.487
07/22/02	18:40:02	85.402
07/22/02	18:41:02	85.402
07/22/02	18:42:02	86.653
07/22/02	18:43:02	85.686
07/22/02	18:44:02	85.487
07/22/02	18:45:02	86.198
07/22/02	18:46:02	85.857
07/22/02	18:47:02	85.942
07/22/02	18:48:02	85.857
07/22/02	18:49:02	86.198
07/22/02	18:50:02	86.113
07/22/02	18:51:02	86.397
07/22/02	18:52:02	86.482
07/22/02	18:53:02	86.397
07/22/02	18:54:02	85.857
07/22/02	18:55:02	85.857
07/22/02	18:56:02	87.279
07/22/02	18:57:02	86.312
07/22/02	18:58:02	85.231
07/22/02	18:59:02	85.686
07/22/02	19:00:02	87.279
07/22/02	19:01:02	87.705
07/22/02	19:02:02	86.113
07/22/02	19:03:02	85.686
07/22/02	19:04:02	86.909
07/22/02	19:05:02	85.942
07/22/02	19:06:02	86.397
07/22/02	19:07:02	85.686
07/22/02	19:08:02	86.738
07/22/02	19:09:02	86.027
07/22/02	19:10:02	86.568
07/22/02	19:11:02	86.312
07/22/02	19:12:02	86.482
07/22/02	19:13:02	86.738
07/22/02	19:14:02	86.113
07/22/02	19:15:02	86.198
07/22/02	19:16:02	85.857
07/22/02	19:17:02	86.482
07/22/02	19:18:02	85.857
07/22/02	19:19:02	88.160
07/22/02	19:20:02	86.653
07/22/02	19:21:02	85.771
07/22/02	19:22:02	86.312
07/22/02	19:23:02	86.027
07/22/02	19:24:02	86.482
07/22/02	19:25:02	86.653
07/22/02	19:26:02	86.198
07/22/02	19:27:02	85.402
07/22/02	19:28:02	86.994
07/22/02	19:29:02	86.312
07/22/02	19:30:02	87.620
07/22/02	19:31:02	86.994
07/22/02	19:32:02	87.108
07/22/02	19:33:02	86.312
07/22/02	19:34:02	87.279
07/22/02	19:35:02	86.909
07/22/02	19:36:02	85.771
07/22/02	19:37:02	87.108
07/22/02	19:38:02	85.857
07/22/02	19:39:02	87.279
07/22/02	19:40:02	86.994
07/22/02	19:41:02	86.909
07/22/02	19:42:02	86.312
07/22/02	19:43:02	86.397
07/22/02	19:44:02	85.686
07/22/02	19:45:02	86.994
07/22/02	19:46:02	86.482
07/22/02	19:47:02	86.994
07/22/02	19:48:02	86.824
07/22/02	19:49:02	86.198
07/22/02	19:50:02	87.364
07/22/02	19:51:02	85.316
07/22/02	19:52:02	86.994
07/22/02	19:53:02	87.364
07/22/02	19:54:02	86.994
07/22/02	19:55:02	86.198
07/22/02	19:56:02	86.568
07/22/02	19:57:02	87.193
07/22/02	19:58:02	85.771
07/22/02	19:59:02	86.568
07/22/02	20:00:02	86.909
07/22/02	20:01:02	84.975
07/22/02	20:02:02	86.738
07/22/02	20:03:02	88.615
07/22/02	20:04:02	87.705
07/22/02	20:05:02	86.568
07/22/02	20:06:02	87.193
07/22/02	20:07:02	86.824
07/22/02	20:08:02	86.568
07/22/02	20:09:02	86.909
07/22/02	20:10:02	87.364
07/22/02	20:11:02	86.824
07/22/02	20:12:02	86.994
07/22/02	20:13:02	86.397
07/22/02	20:14:02	86.568
07/22/02	20:15:02	87.193
07/22/02	20:16:02	88.075
07/22/02	20:17:02	85.686
07/22/02	20:18:02	86.568
07/22/02	20:19:02	86.198
07/22/02	20:20:02	87.449
07/22/02	20:21:02	86.397
07/22/02	20:22:02	86.198
07/22/02	20:23:02	86.994
07/22/02	20:24:02	87.108
07/22/02	20:25:02	86.653
07/22/02	20:26:02	85.771
07/22/02	20:27:02	87.364
07/22/02	20:28:02	86.909
07/22/02	20:29:02	86.312
07/22/02	20:30:02	87.904
07/22/02	20:31:02	86.738
07/22/02	20:32:02	86.909
07/22/02	20:33:02	86.568
07/22/02	20:34:02	86.653
07/22/02	20:35:02	87.108
07/22/02	20:36:02	87.108
07/22/02	20:37:02	86.909
07/22/02	20:38:02	86.994
07/22/02	20:39:02	87.535
07/22/02	20:40:02	86.994
07/22/02	20:41:02	86.738
07/22/02	20:42:02	87.449
07/22/02	20:43:02	87.108
07/22/02	20:44:02	86.824
07/22/02	20:45:02	87.108
07/22/02	20:46:02	86.994
07/22/02	20:47:02	87.364
07/22/02	20:48:02	85.601
07/22/02	20:49:02	86.994
07/22/02	20:50:02	87.279
07/22/02	20:51:02	87.279
07/22/02	20:52:02	86.994
07/22/02	20:53:02	87.904
07/22/02	20:54:02	86.824
07/22/02	20:55:02	87.193
07/22/02	20:56:02	86.824
07/22/02	20:57:02	87.535
07/22/02	20:58:02	87.279
07/22/02	20:59:02	87.535
07/22/02	21:00:02	86.653
07/22/02	21:01:02	86.568
07/22/02	21:02:02	87.364
07/22/02	21:03:02	85.857
07/22/02	21:04:02	85.601
07/22/02	21:05:02	86.568

CHESTNUT AND WALNUT - NO. 7488 cont.

Date	Time	Pres (PSI)
07/22/02	21:06:02	87.705
07/22/02	21:07:02	86.397
07/22/02	21:08:02	86.397
07/22/02	21:09:02	87.705
07/22/02	21:10:02	86.568
07/22/02	21:11:02	86.568
07/22/02	21:12:02	87.279
07/22/02	21:13:02	86.909
07/22/02	21:14:02	87.108
07/22/02	21:15:02	86.738
07/22/02	21:16:02	85.942
07/22/02	21:17:02	87.364
07/22/02	21:18:02	86.568
07/22/02	21:19:02	88.160
07/22/02	21:20:02	86.653
07/22/02	21:21:02	87.364
07/22/02	21:22:02	86.824
07/22/02	21:23:02	86.738
07/22/02	21:24:02	87.193
07/22/02	21:25:02	87.449
07/22/02	21:26:02	86.397
07/22/02	21:27:02	86.824
07/22/02	21:28:02	86.909
07/22/02	21:29:02	87.108
07/22/02	21:30:02	87.620
07/22/02	21:31:02	87.620
07/22/02	21:32:02	87.620
07/22/02	21:33:02	87.279
07/22/02	21:34:02	87.535
07/22/02	21:35:02	87.279
07/22/02	21:36:02	87.279
07/22/02	21:37:02	88.160
07/22/02	21:38:02	88.331
07/22/02	21:39:02	87.705
07/22/02	21:40:02	87.279
07/22/02	21:41:02	87.364
07/22/02	21:42:02	87.279
07/22/02	21:43:02	87.449
07/22/02	21:44:02	87.904
07/22/02	21:45:02	86.568
07/22/02	21:46:02	87.108
07/22/02	21:47:02	87.705
07/22/02	21:48:02	87.364
07/22/02	21:49:02	87.279
07/22/02	21:50:02	88.245
07/22/02	21:51:02	88.160
07/22/02	21:52:02	88.331
07/22/02	21:53:02	87.279
07/22/02	21:54:02	87.535
07/22/02	21:55:02	87.620
07/22/02	21:56:02	88.530
07/22/02	21:57:02	88.786
07/22/02	21:58:02	88.530
07/22/02	21:59:02	85.146
07/22/02	22:00:02	87.449
07/22/02	22:01:02	87.819
07/22/02	22:02:02	88.075
07/22/02	22:03:02	86.568
07/22/02	22:04:02	87.364
07/22/02	22:05:02	88.245
07/22/02	22:06:02	86.482
07/22/02	22:07:02	87.535
07/22/02	22:08:02	87.193
07/22/02	22:09:02	88.871
07/22/02	22:10:02	87.819
07/22/02	22:11:02	87.108

Date	Time	Pres (PSI)
07/22/02	22:12:02	88.160
07/22/02	22:13:02	86.568
07/22/02	22:14:02	86.027
07/22/02	22:15:02	87.620
07/22/02	22:16:02	88.416
07/22/02	22:17:02	87.705
07/22/02	22:18:02	88.075
07/22/02	22:19:02	87.364
07/22/02	22:20:02	87.364
07/22/02	22:21:02	87.449
07/22/02	22:22:02	87.819
07/22/02	22:23:02	87.990
07/22/02	22:24:02	87.620
07/22/02	22:25:02	87.449
07/22/02	22:26:02	88.331
07/22/02	22:27:02	87.449
07/22/02	22:28:02	88.871
07/22/02	22:29:02	86.909
07/22/02	22:30:02	86.994
07/22/02	22:31:02	87.364
07/22/02	22:32:02	87.535
07/22/02	22:33:02	87.705
07/22/02	22:34:02	87.449
07/22/02	22:35:02	88.075
07/22/02	22:36:02	87.535
07/22/02	22:37:02	86.909
07/22/02	22:38:02	89.042
07/22/02	22:39:02	87.108
07/22/02	22:40:02	86.994
07/22/02	22:41:02	88.871
07/22/02	22:42:02	87.449
07/22/02	22:43:02	88.956
07/22/02	22:44:02	88.416
07/22/02	22:45:02	78.747
07/22/02	22:46:02	85.487
07/22/02	22:47:02	82.302
07/22/02	22:48:02	87.193
07/22/02	22:49:02	84.804
07/22/02	22:50:02	84.975
07/22/02	22:51:02	84.804
07/22/02	22:52:02	84.264
07/22/02	22:53:02	86.198
07/22/02	22:54:02	85.316
07/22/02	22:55:02	85.316
07/22/02	22:56:02	85.487
07/22/02	22:57:02	85.487
07/22/02	22:58:02	85.316
07/22/02	22:59:02	84.093
07/22/02	23:00:02	84.264
07/22/02	23:01:02	84.435
07/22/02	23:02:02	84.804
07/22/02	23:03:02	84.890
07/22/02	23:04:02	84.349
07/22/02	23:05:02	85.231
07/22/02	23:06:02	84.435
07/22/02	23:07:02	84.264
07/22/02	23:08:02	84.435
07/22/02	23:09:02	85.686
07/22/02	23:10:02	85.146
07/22/02	23:11:02	84.435
07/22/02	23:12:02	86.113
07/22/02	23:13:02	84.520
07/22/02	23:14:02	84.691
07/22/02	23:15:02	85.771
07/22/02	23:16:02	85.060
07/22/02	23:17:02	84.605

Date	Time	Pres (PSI)
07/22/02	23:18:02	85.402
07/22/02	23:19:02	85.601
07/22/02	23:20:02	83.809
07/22/02	23:21:02	84.890
07/22/02	23:22:02	85.146
07/22/02	23:23:02	84.264
07/22/02	23:24:02	85.060
07/22/02	23:25:02	84.691
07/22/02	23:26:02	84.605
07/22/02	23:27:02	83.638
07/22/02	23:28:02	86.113
07/22/02	23:29:02	83.980
07/22/02	23:30:02	84.349
07/22/02	23:31:02	84.264
07/22/02	23:32:02	84.179
07/22/02	23:33:02	85.402
07/22/02	23:34:02	84.520
07/22/02	23:35:02	83.980
07/22/02	23:36:02	85.402
07/22/02	23:37:02	86.027
07/22/02	23:38:02	84.520
07/22/02	23:39:02	84.435
07/22/02	23:40:02	85.771
07/22/02	23:41:02	84.804
07/22/02	23:42:02	84.890
07/22/02	23:43:02	85.060
07/22/02	23:44:02	85.146
07/22/02	23:45:02	85.771
07/22/02	23:46:02	85.146
07/22/02	23:47:02	83.183
07/22/02	23:48:02	85.146
07/22/02	23:49:02	84.975
07/22/02	23:50:02	84.890
07/22/02	23:51:02	85.601
07/22/02	23:52:02	83.894
07/22/02	23:53:02	84.804
07/22/02	23:54:02	84.520
07/22/02	23:55:02	84.093
07/22/02	23:56:02	85.487
07/22/02	23:57:02	83.724
07/22/02	23:58:02	85.316
07/22/02	23:59:02	84.804
07/23/02	00:00:02	83.724
07/23/02	00:01:02	85.402
07/23/02	00:02:02	84.605
07/23/02	00:03:02	84.435
07/23/02	00:04:02	85.146
07/23/02	00:05:02	84.435
07/23/02	00:06:02	84.890
07/23/02	00:07:02	85.601
07/23/02	00:08:02	84.093
07/23/02	00:09:02	84.975
07/23/02	00:10:02	84.605
07/23/02	00:11:02	84.349
07/23/02	00:12:02	85.146
07/23/02	00:13:02	84.520
07/23/02	00:14:02	85.316
07/23/02	00:15:02	85.060
07/23/02	00:16:02	85.231
07/23/02	00:17:02	84.890
07/23/02	00:18:02	84.691
07/23/02	00:19:02	84.975
07/23/02	00:20:02	85.060
07/23/02	00:21:02	84.890
07/23/02	00:22:02	84.975
07/23/02	00:23:02	83.382

Date	Time	Pres (PSI)
07/23/02	00:24:02	84.520
07/23/02	00:25:02	86.482
07/23/02	00:26:02	84.179
07/23/02	00:27:02	84.691
07/23/02	00:28:02	84.435
07/23/02	00:29:02	84.605
07/23/02	00:30:02	84.435
07/23/02	00:31:02	84.804
07/23/02	00:32:02	83.809
07/23/02	00:33:02	84.804
07/23/02	00:34:02	84.975
07/23/02	00:35:02	84.264
07/23/02	00:36:02	84.691
07/23/02	00:37:02	83.724
07/23/02	00:38:02	85.146
07/23/02	00:39:02	84.804
07/23/02	00:40:02	84.435
07/23/02	00:41:02	84.179
07/23/02	00:42:02	83.809
07/23/02	00:43:02	84.520
07/23/02	00:44:02	84.691
07/23/02	00:45:02	84.605
07/23/02	00:46:02	84.520
07/23/02	00:47:02	84.093
07/23/02	00:48:02	85.487
07/23/02	00:49:02	84.975
07/23/02	00:50:02	84.179
07/23/02	00:51:02	84.691
07/23/02	00:52:02	84.093
07/23/02	00:53:02	84.435
07/23/02	00:54:02	85.231
07/23/02	00:55:02	84.093
07/23/02	00:56:02	84.349
07/23/02	00:57:02	84.890
07/23/02	00:58:02	84.349
07/23/02	00:59:02	84.435
07/23/02	01:00:02	84.093
07/23/02	01:01:02	84.890
07/23/02	01:02:02	85.060
07/23/02	01:03:02	83.553
07/23/02	01:04:02	84.435
07/23/02	01:05:02	84.605
07/23/02	01:06:02	84.975
07/23/02	01:07:02	83.809
07/23/02	01:08:02	83.724
07/23/02	01:09:02	85.060
07/23/02	01:10:02	83.638
07/23/02	01:11:02	84.975
07/23/02	01:12:02	85.146
07/23/02	01:13:02	84.691
07/23/02	01:14:02	83.894
07/23/02	01:15:02	83.894
07/23/02	01:16:02	85.487
07/23/02	01:17:02	83.553
07/23/02	01:18:02	84.349
07/23/02	01:19:02	84.975
07/23/02	01:20:02	83.638
07/23/02	01:21:02	84.804
07/23/02	01:22:02	84.435
07/23/02	01:23:02	83.980
07/23/02	01:24:02	84.975
07/23/02	01:25:02	84.520
07/23/02	01:26:02	84.605
07/23/02	01:27:02	84.264
07/23/02	01:28:02	84.264
07/23/02	01:29:02	84.890

CHESTNUT AND WALNUT - NO. 7488 cont.

Date	Time	Pres (PSI)
07/23/02	01:30:02	83.894
07/23/02	01:31:02	84.804
07/23/02	01:32:02	83.980
07/23/02	01:33:02	84.605
07/23/02	01:34:02	84.435
07/23/02	01:35:02	84.349
07/23/02	01:36:02	85.060
07/23/02	01:37:02	84.691
07/23/02	01:38:02	83.809
07/23/02	01:39:02	83.809
07/23/02	01:40:02	84.093
07/23/02	01:41:02	84.520
07/23/02	01:42:02	84.804
07/23/02	01:43:02	84.804
07/23/02	01:44:02	84.890
07/23/02	01:45:02	84.093
07/23/02	01:46:02	84.179
07/23/02	01:47:02	84.349
07/23/02	01:48:02	84.890
07/23/02	01:49:02	84.435
07/23/02	01:50:02	85.231
07/23/02	01:51:02	83.724
07/23/02	01:52:02	84.179
07/23/02	01:53:02	84.264
07/23/02	01:54:02	84.349
07/23/02	01:55:02	84.435
07/23/02	01:56:02	83.894
07/23/02	01:57:02	84.349
07/23/02	01:58:02	84.435
07/23/02	01:59:02	84.520
07/23/02	02:00:02	84.349
07/23/02	02:01:02	84.179
07/23/02	02:02:02	83.183
07/23/02	02:03:02	84.975
07/23/02	02:04:02	84.264
07/23/02	02:05:02	83.468
07/23/02	02:06:02	84.520
07/23/02	02:07:02	83.724
07/23/02	02:08:02	84.349
07/23/02	02:09:02	83.269
07/23/02	02:10:02	84.349
07/23/02	02:11:02	84.349
07/23/02	02:12:02	84.691
07/23/02	02:13:02	83.724
07/23/02	02:14:02	83.894
07/23/02	02:15:02	84.435
07/23/02	02:16:02	83.724
07/23/02	02:17:02	83.724
07/23/02	02:18:02	95.156
07/23/02	02:19:02	90.122
07/23/02	02:20:02	91.089
07/23/02	02:21:02	90.748
07/23/02	02:22:02	90.378
07/23/02	02:23:02	90.208
07/23/02	02:24:02	90.634
07/23/02	02:25:02	90.122
07/23/02	02:26:02	89.753
07/23/02	02:27:02	90.634
07/23/02	02:28:02	90.122
07/23/02	02:29:02	90.378
07/23/02	02:30:02	90.748
07/23/02	02:31:02	91.089
07/23/02	02:32:02	90.549
07/23/02	02:33:02	89.838
07/23/02	02:34:02	90.748
07/23/02	02:35:02	90.748

Date	Time	Pres (PSI)
07/23/02	02:36:02	91.089
07/23/02	02:37:02	90.464
07/23/02	02:38:02	90.634
07/23/02	02:39:02	89.411
07/23/02	02:40:02	90.122
07/23/02	02:41:02	91.175
07/23/02	02:42:02	90.464
07/23/02	02:43:02	90.634
07/23/02	02:44:02	90.293
07/23/02	02:45:02	90.122
07/23/02	02:46:02	89.212
07/23/02	02:47:02	90.293
07/23/02	02:48:02	91.089
07/23/02	02:49:02	90.748
07/23/02	02:50:02	91.089
07/23/02	02:51:02	91.175
07/23/02	02:52:02	90.748
07/23/02	02:53:02	90.634
07/23/02	02:54:02	90.919
07/23/02	02:55:02	90.293
07/23/02	02:56:02	89.753
07/23/02	02:57:02	90.464
07/23/02	02:58:02	89.838
07/23/02	02:59:02	90.549
07/23/02	03:00:02	90.549
07/23/02	03:01:02	90.037
07/23/02	03:02:02	90.464
07/23/02	03:03:02	90.208
07/23/02	03:04:02	90.293
07/23/02	03:05:02	90.293
07/23/02	03:06:02	90.293
07/23/02	03:07:02	90.634
07/23/02	03:08:02	90.293
07/23/02	03:09:02	90.464
07/23/02	03:10:02	90.293
07/23/02	03:11:02	90.634
07/23/02	03:12:02	90.037
07/23/02	03:13:02	90.378
07/23/02	03:14:02	90.634
07/23/02	03:15:02	89.838
07/23/02	03:16:02	90.208
07/23/02	03:17:02	90.208
07/23/02	03:18:02	90.208
07/23/02	03:19:02	89.923
07/23/02	03:20:02	90.293
07/23/02	03:21:02	90.208
07/23/02	03:22:02	90.293
07/23/02	03:23:02	90.037
07/23/02	03:24:02	90.208
07/23/02	03:25:02	90.122
07/23/02	03:26:02	90.549
07/23/02	03:27:02	90.464
07/23/02	03:28:02	90.378
07/23/02	03:29:02	90.464
07/23/02	03:30:02	90.293
07/23/02	03:31:02	90.748
07/23/02	03:32:02	90.833
07/23/02	03:33:02	90.919
07/23/02	03:34:02	89.667
07/23/02	03:35:02	90.833
07/23/02	03:36:02	90.634
07/23/02	03:37:02	91.089
07/23/02	03:38:02	90.919
07/23/02	03:39:02	91.175
07/23/02	03:40:02	91.260
07/23/02	03:41:02	91.345

Date	Time	Pres (PSI)
07/23/02	03:42:02	91.089
07/23/02	03:43:02	91.004
07/23/02	03:44:02	91.260
07/23/02	03:45:02	91.630
07/23/02	03:46:02	90.833
07/23/02	03:47:02	91.175
07/23/02	03:48:02	91.260
07/23/02	03:49:02	91.345
07/23/02	03:50:02	91.715
07/23/02	03:51:02	91.089
07/23/02	03:52:02	91.544
07/23/02	03:53:02	91.089
07/23/02	03:54:02	91.431
07/23/02	03:55:02	91.345
07/23/02	03:56:02	91.089
07/23/02	03:57:02	91.345
07/23/02	03:58:02	91.431
07/23/02	03:59:02	91.431
07/23/02	04:00:02	91.175
07/23/02	04:01:02	90.464
07/23/02	04:02:02	90.919
07/23/02	04:03:02	91.089
07/23/02	04:04:02	91.260
07/23/02	04:05:02	91.544
07/23/02	04:06:02	91.345
07/23/02	04:07:02	91.004
07/23/02	04:08:02	91.544
07/23/02	04:09:02	91.004
07/23/02	04:10:02	90.549
07/23/02	04:11:02	91.431
07/23/02	04:12:02	91.004
07/23/02	04:13:02	91.175
07/23/02	04:14:02	90.833
07/23/02	04:15:02	90.833
07/23/02	04:16:02	91.260
07/23/02	04:17:02	90.833
07/23/02	04:18:02	91.345
07/23/02	04:19:02	90.919
07/23/02	04:20:02	91.004
07/23/02	04:21:02	91.004
07/23/02	04:22:02	91.544
07/23/02	04:23:02	91.175
07/23/02	04:24:02	91.004
07/23/02	04:25:02	91.260
07/23/02	04:26:02	90.037
07/23/02	04:27:02	79.287
07/23/02	04:28:02	88.956
07/23/02	04:29:02	85.771
07/23/02	04:30:02	85.686
07/23/02	04:31:02	87.108
07/23/02	04:32:02	86.027
07/23/02	04:33:02	86.027
07/23/02	04:34:02	85.316
07/23/02	04:35:02	86.653
07/23/02	04:36:02	86.027
07/23/02	04:37:02	86.397
07/23/02	04:38:02	85.316
07/23/02	04:39:02	86.113
07/23/02	04:40:02	85.686
07/23/02	04:41:02	86.397
07/23/02	04:42:02	84.975
07/23/02	04:43:02	85.686
07/23/02	04:44:02	85.942
07/23/02	04:45:02	86.198
07/23/02	04:46:02	84.691
07/23/02	04:47:02	86.312

Date	Time	Pres (PSI)
07/23/02	04:48:02	85.686
07/23/02	04:49:02	86.113
07/23/02	04:50:02	85.686
07/23/02	04:51:02	86.113
07/23/02	04:52:02	85.601
07/23/02	04:53:02	85.316
07/23/02	04:54:02	86.198
07/23/02	04:55:02	86.027
07/23/02	04:56:02	85.771
07/23/02	04:57:02	85.402
07/23/02	04:58:02	85.601
07/23/02	04:59:02	85.942
07/23/02	05:00:02	85.402
07/23/02	05:01:02	86.113
07/23/02	05:02:02	85.771
07/23/02	05:03:02	85.771
07/23/02	05:04:02	85.316
07/23/02	05:05:02	85.060
07/23/02	05:06:02	86.113
07/23/02	05:07:02	85.487
07/23/02	05:08:02	85.487
07/23/02	05:09:02	85.231
07/23/02	05:10:02	85.231
07/23/02	05:11:02	86.568
07/23/02	05:12:02	85.402
07/23/02	05:13:02	85.601
07/23/02	05:14:02	85.942
07/23/02	05:15:02	85.316
07/23/02	05:16:02	85.402
07/23/02	05:17:02	86.027
07/23/02	05:18:02	84.605
07/23/02	05:19:02	85.487
07/23/02	05:20:02	86.312
07/23/02	05:21:02	84.804
07/23/02	05:22:02	85.686
07/23/02	05:23:02	85.771
07/23/02	05:24:02	85.402
07/23/02	05:25:02	86.198
07/23/02	05:26:02	85.146
07/23/02	05:27:02	85.942
07/23/02	05:28:02	86.027
07/23/02	05:29:02	85.487
07/23/02	05:30:02	85.771
07/23/02	05:31:02	84.890
07/23/02	05:32:02	85.487
07/23/02	05:33:02	85.487
07/23/02	05:34:02	85.942
07/23/02	05:35:02	85.771
07/23/02	05:36:02	85.771
07/23/02	05:37:02	84.264
07/23/02	05:38:02	84.890
07/23/02	05:39:02	84.435
07/23/02	05:40:02	85.487
07/23/02	05:41:02	85.601
07/23/02	05:42:02	84.691
07/23/02	05:43:02	85.316
07/23/02	05:44:02	85.146
07/23/02	05:45:02	83.894
07/23/02	05:46:02	83.809
07/23/02	05:47:02	85.487
07/23/02	05:48:02	85.060
07/23/02	05:49:02	85.942
07/23/02	05:50:02	84.890
07/23/02	05:51:02	84.605
07/23/02	05:52:02	85.402
07/23/02	05:53:02	85.601

CHESTNUT AND WALNUT - NO. 7488 cont.

Date	Time	Pres (PSI)
07/23/02	05:54:02	84.975
07/23/02	05:55:02	85.487
07/23/02	05:56:02	85.942
07/23/02	05:57:02	84.605
07/23/02	05:58:02	85.060
07/23/02	05:59:02	85.060
07/23/02	06:00:02	85.060
07/23/02	06:01:02	84.349
07/23/02	06:02:02	85.487
07/23/02	06:03:02	84.520
07/23/02	06:04:02	85.231
07/23/02	06:05:02	85.601
07/23/02	06:06:02	83.809
07/23/02	06:07:02	85.231
07/23/02	06:08:02	84.605
07/23/02	06:09:02	84.093
07/23/02	06:10:02	84.520
07/23/02	06:11:02	84.605
07/23/02	06:12:02	85.231
07/23/02	06:13:02	84.264
07/23/02	06:14:02	85.231
07/23/02	06:15:02	83.638
07/23/02	06:16:02	85.146
07/23/02	06:17:02	84.179
07/23/02	06:18:02	85.771
07/23/02	06:19:02	84.179
07/23/02	06:20:02	84.093
07/23/02	06:21:02	83.980
07/23/02	06:22:02	85.231
07/23/02	06:23:02	83.269
07/23/02	06:24:02	84.264
07/23/02	06:25:02	83.809
07/23/02	06:26:02	84.435
07/23/02	06:27:02	83.724
07/23/02	06:28:02	84.691
07/23/02	06:29:02	84.349
07/23/02	06:30:02	85.231
07/23/02	06:31:02	83.468
07/23/02	06:32:02	84.349
07/23/02	06:33:02	85.857
07/23/02	06:34:02	84.093
07/23/02	06:35:02	84.804
07/23/02	06:36:02	83.553
07/23/02	06:37:02	84.520
07/23/02	06:38:02	83.724
07/23/02	06:39:02	83.468
07/23/02	06:40:02	84.093
07/23/02	06:41:02	84.349
07/23/02	06:42:02	84.093
07/23/02	06:43:02	84.264
07/23/02	06:44:02	83.894
07/23/02	06:45:02	84.179
07/23/02	06:46:02	83.809
07/23/02	06:47:02	83.638
07/23/02	06:48:02	83.468
07/23/02	06:49:02	83.809
07/23/02	06:50:02	83.724
07/23/02	06:51:02	83.468
07/23/02	06:52:02	83.553
07/23/02	06:53:02	83.098
07/23/02	06:54:02	84.264
07/23/02	06:55:02	83.724
07/23/02	06:56:02	83.468
07/23/02	06:57:02	84.520
07/23/02	06:58:02	83.382
07/23/02	06:59:02	84.264
07/23/02	07:00:02	84.520
07/23/02	07:01:02	83.269
07/23/02	07:02:02	82.842
07/23/02	07:03:02	83.553
07/23/02	07:04:02	83.183
07/23/02	07:05:02	84.975
07/23/02	07:06:02	82.927
07/23/02	07:07:02	82.842
07/23/02	07:08:02	83.724
07/23/02	07:09:02	83.553
07/23/02	07:10:02	82.757
07/23/02	07:11:02	84.435
07/23/02	07:12:02	82.302
07/23/02	07:13:02	82.387
07/23/02	07:14:02	82.046
07/23/02	07:15:02	83.809
07/23/02	07:16:02	83.809
07/23/02	07:17:02	82.131
07/23/02	07:18:02	83.013
07/23/02	07:19:02	83.553
07/23/02	07:20:02	81.875
07/23/02	07:21:02	82.586
07/23/02	07:22:02	83.980
07/23/02	07:23:02	81.961
07/23/02	07:24:02	83.382
07/23/02	07:25:02	82.387
07/23/02	07:26:02	82.586
07/23/02	07:27:02	93.222
07/23/02	07:28:02	81.875
07/23/02	07:29:02	85.857
07/23/02	07:30:02	84.890
07/23/02	07:31:02	85.771
07/23/02	07:32:02	84.264
07/23/02	07:33:02	83.809
07/23/02	07:34:02	85.316
07/23/02	07:35:02	85.487
07/23/02	07:36:02	85.316
07/23/02	07:37:02	84.691
07/23/02	07:38:02	85.402
07/23/02	07:39:02	85.231
07/23/02	07:40:02	84.093
07/23/02	07:41:02	86.312
07/23/02	07:42:02	85.231
07/23/02	07:43:02	85.146
07/23/02	07:44:02	86.312
07/23/02	07:45:02	84.975
07/23/02	07:46:02	84.520
07/23/02	07:47:02	85.060
07/23/02	07:48:02	84.804
07/23/02	07:49:02	84.093
07/23/02	07:50:02	85.686
07/23/02	07:51:02	84.975
07/23/02	07:52:02	85.402
07/23/02	07:53:02	85.060
07/23/02	07:54:02	85.487
07/23/02	07:55:02	85.857
07/23/02	07:56:02	85.942
07/23/02	07:57:02	85.060
07/23/02	07:58:02	85.487
07/23/02	07:59:02	85.601
07/23/02	08:00:02	85.487
07/23/02	08:01:02	84.890
07/23/02	08:02:02	85.146
07/23/02	08:03:02	86.312
07/23/02	08:04:02	85.231
07/23/02	08:05:02	84.605
07/23/02	08:06:02	86.397
07/23/02	08:07:02	83.638
07/23/02	08:08:02	86.027
07/23/02	08:09:02	84.605
07/23/02	08:10:02	85.771
07/23/02	08:11:02	85.060
07/23/02	08:12:02	84.605
07/23/02	08:13:02	85.686
07/23/02	08:14:02	85.487
07/23/02	08:15:02	85.146
07/23/02	08:16:02	83.980
07/23/02	08:17:02	85.402
07/23/02	08:18:02	85.146
07/23/02	08:19:02	84.349
07/23/02	08:20:02	84.605
07/23/02	08:21:02	84.975
07/23/02	08:22:02	85.316
07/23/02	08:23:02	85.686
07/23/02	08:24:02	84.605
07/23/02	08:25:02	85.316
07/23/02	08:26:02	85.060
07/23/02	08:27:02	85.857
07/23/02	08:28:02	83.894
07/23/02	08:29:02	85.146
07/23/02	08:30:02	85.316
07/23/02	08:31:02	84.093
07/23/02	08:32:02	85.060
07/23/02	08:33:02	85.686
07/23/02	08:34:02	84.804
07/23/02	08:35:02	84.093
07/23/02	08:36:02	85.146
07/23/02	08:37:02	84.804
07/23/02	08:38:02	84.349
07/23/02	08:39:02	85.060
07/23/02	08:40:02	86.312
07/23/02	08:41:02	84.804
07/23/02	08:42:02	84.605
07/23/02	08:43:02	85.316
07/23/02	08:44:02	84.349
07/23/02	08:45:02	85.402
07/23/02	08:46:02	85.060
07/23/02	08:47:02	83.894
07/23/02	08:48:02	85.857
07/23/02	08:49:02	84.349
07/23/02	08:50:02	85.231
07/23/02	08:51:02	85.686
07/23/02	08:52:02	93.649
07/23/02	08:53:02	84.804
07/23/02	08:54:02	86.198
07/23/02	08:55:02	87.193
07/23/02	08:56:02	86.482
07/23/02	08:57:02	87.620
07/23/02	08:58:02	86.909
07/23/02	08:59:02	87.279
07/23/02	09:00:02	86.397
07/23/02	09:01:02	86.994
07/23/02	09:02:02	87.193
07/23/02	09:03:02	83.809
07/23/02	09:04:02	85.686
07/23/02	09:05:02	87.449
07/23/02	09:06:02	86.824
07/23/02	09:07:02	86.824
07/23/02	09:08:02	85.857
07/23/02	09:09:02	87.279
07/23/02	09:10:02	83.894
07/23/02	09:11:02	86.397
07/23/02	09:12:02	86.397
07/23/02	09:13:02	86.312
07/23/02	09:14:02	86.027
07/23/02	09:15:02	86.113
07/23/02	09:16:02	86.738
07/23/02	09:17:02	87.108
07/23/02	09:18:02	86.198
07/23/02	09:19:02	86.027
07/23/02	09:20:02	85.942
07/23/02	09:21:02	86.568
07/23/02	09:22:02	87.108
07/23/02	09:23:02	86.198
07/23/02	09:24:02	86.738
07/23/02	09:25:02	86.824
07/23/02	09:26:02	86.397
07/23/02	09:27:02	85.231
07/23/02	09:28:02	86.397
07/23/02	09:29:02	86.198
07/23/02	09:30:02	85.686
07/23/02	09:31:02	87.193
07/23/02	09:32:02	86.113
07/23/02	09:33:02	85.146
07/23/02	09:34:02	86.027
07/23/02	09:35:02	87.535
07/23/02	09:36:02	86.738
07/23/02	09:37:02	87.108
07/23/02	09:38:02	85.857
07/23/02	09:39:02	86.824
07/23/02	09:40:02	86.482
07/23/02	09:41:02	86.568
07/23/02	09:42:02	87.193
07/23/02	09:43:02	87.108
07/23/02	09:44:02	86.653
07/23/02	09:45:02	86.909
07/23/02	09:46:02	86.482
07/23/02	09:47:02	85.857
07/23/02	09:48:02	86.994
07/23/02	09:49:02	85.857
07/23/02	09:50:02	85.857
07/23/02	09:51:02	86.568
07/23/02	09:52:02	86.397
07/23/02	09:53:02	86.397
07/23/02	09:54:02	87.108
07/23/02	09:55:02	86.994
07/23/02	09:56:02	86.397
07/23/02	09:57:02	87.449
07/23/02	09:58:02	86.653
07/23/02	09:59:02	86.824
07/23/02	10:00:02	86.027
07/23/02	10:01:02	86.994
07/23/02	10:02:02	86.738
07/23/02	10:03:02	84.691
07/23/02	10:04:02	86.397
07/23/02	10:05:02	86.738
07/23/02	10:06:02	86.568
07/23/02	10:07:02	86.482
07/23/02	10:08:02	86.312
07/23/02	10:09:02	86.568
07/23/02	10:10:02	86.824
07/23/02	10:11:02	86.482
07/23/02	10:12:02	86.027
07/23/02	10:13:02	86.568
07/23/02	10:14:02	86.397
07/23/02	10:15:02	86.994
07/23/02	10:16:02	86.994
07/23/02	10:17:02	87.620

CHESTNUT AND WALNUT - NO. 7488 cont.

Date	Time	Pres (PSI)
07/23/02	10:18:02	85.060
07/23/02	10:19:02	86.568
07/23/02	10:20:02	87.193
07/23/02	10:21:02	87.108
07/23/02	10:22:02	86.738
07/23/02	10:23:02	87.108
07/23/02	10:24:02	87.904
07/23/02	10:25:02	86.397
07/23/02	10:26:02	86.482
07/23/02	10:27:02	86.909
07/23/02	10:28:02	87.364
07/23/02	10:29:02	86.397
07/23/02	10:30:02	86.909
07/23/02	10:31:02	87.193
07/23/02	10:32:02	86.909
07/23/02	10:33:02	86.738
07/23/02	10:34:02	86.909
07/23/02	10:35:02	85.857
07/23/02	10:36:02	86.824
07/23/02	10:37:02	86.568
07/23/02	10:38:02	86.397
07/23/02	10:39:02	86.027
07/23/02	10:40:02	86.027
07/23/02	10:41:02	86.738
07/23/02	10:42:02	84.975
07/23/02	10:43:02	86.994
07/23/02	10:44:02	86.113
07/23/02	10:45:02	86.994
07/23/02	10:46:02	87.193
07/23/02	10:47:02	86.653
07/23/02	10:48:02	86.568
07/23/02	10:49:02	85.942
07/23/02	10:50:02	87.108
07/23/02	10:51:02	81.079
07/23/02	10:52:02	89.042
07/23/02	10:53:02	86.653
07/23/02	10:54:02	87.193
07/23/02	10:55:02	87.193
07/23/02	10:56:02	86.568
07/23/02	10:57:02	84.890
07/23/02	10:58:02	80.795
07/23/02	10:59:02	81.250
07/23/02	11:00:02	82.131
07/23/02	11:01:02	81.079
07/23/02	11:02:02	82.046
07/23/02	11:03:02	67.144
07/23/02	11:04:02	77.951
07/23/02	11:05:02	72.803
07/23/02	11:06:02	73.600
07/23/02	11:07:02	73.884
07/23/02	11:08:02	74.140
07/23/02	11:09:02	73.173
07/23/02	11:10:02	73.799
07/23/02	11:11:02	72.547
07/23/02	11:12:02	72.377
07/23/02	11:13:02	73.002
07/23/02	11:14:02	73.173
07/23/02	11:15:02	72.462
07/23/02	11:16:02	72.917
07/23/02	11:17:02	72.803
07/23/02	11:18:02	72.718
07/23/02	11:19:02	72.718
07/23/02	11:20:02	73.088
07/23/02	11:21:02	73.713
07/23/02	11:22:02	76.187
07/23/02	11:23:02	80.709

Date	Time	Pres (PSI)
07/23/02	11:24:02	85.942
07/23/02	11:25:02	82.387
07/23/02	11:26:02	83.638
07/23/02	11:27:02	83.269
07/23/02	11:28:02	84.093
07/23/02	11:29:02	83.013
07/23/02	11:30:02	83.638
07/23/02	11:31:02	83.638
07/23/02	11:32:02	82.927
07/23/02	11:33:02	84.520
07/23/02	11:34:02	83.013
07/23/02	11:35:02	82.757
07/23/02	11:36:02	83.098
07/23/02	11:37:02	82.046
07/23/02	11:38:02	83.809
07/23/02	11:39:02	83.183
07/23/02	11:40:02	83.638
07/23/02	11:41:02	82.472
07/23/02	11:42:02	82.757
07/23/02	11:43:02	83.468
07/23/02	11:44:02	83.269
07/23/02	11:45:02	83.098
07/23/02	11:46:02	84.093
07/23/02	11:47:02	83.098
07/23/02	11:48:02	82.842
07/23/02	11:49:02	83.809
07/23/02	11:50:02	81.591
07/23/02	11:51:02	85.316
07/23/02	11:52:02	82.046
07/23/02	11:53:02	83.553
07/23/02	11:54:02	90.208
07/23/02	11:55:02	85.231
07/23/02	11:56:02	83.980
07/23/02	11:57:02	85.601
07/23/02	11:58:02	83.809
07/23/02	11:59:02	85.402
07/23/02	12:00:02	84.691
07/23/02	12:01:02	84.804
07/23/02	12:02:02	84.264
07/23/02	12:03:02	85.146
07/23/02	12:04:02	83.013
07/23/02	12:05:02	85.487
07/23/02	12:06:02	85.060
07/23/02	12:07:02	85.316
07/23/02	12:08:02	84.804
07/23/02	12:09:02	79.117
07/23/02	12:10:02	76.102
07/23/02	12:11:02	79.998
07/23/02	12:12:02	80.539
07/23/02	12:13:02	79.657
07/23/02	12:14:02	78.662
07/23/02	12:15:02	79.458
07/23/02	12:16:02	77.865
07/23/02	12:17:02	79.742
07/23/02	12:18:02	94.274
07/23/02	12:19:02	87.990
07/23/02	12:20:02	87.819
07/23/02	12:21:02	88.075
07/23/02	12:22:02	88.075
07/23/02	12:23:02	88.245
07/23/02	12:24:02	88.530
07/23/02	12:25:02	88.615
07/23/02	12:26:02	87.279
07/23/02	12:27:02	89.127
07/23/02	12:28:02	88.075
07/23/02	12:29:02	87.990

Date	Time	Pres (PSI)
07/23/02	12:30:02	87.990
07/23/02	12:31:02	87.108
07/23/02	12:32:02	87.535
07/23/02	12:33:02	89.212
07/23/02	12:34:02	90.037
07/23/02	12:35:02	90.919
07/23/02	12:36:02	91.715
07/23/02	12:37:02	91.345
07/23/02	12:38:02	92.056
07/23/02	12:39:02	92.255
07/23/02	12:40:02	92.142
07/23/02	12:41:02	91.630
07/23/02	12:42:02	92.767
07/23/02	12:43:02	92.938
07/23/02	12:44:02	91.886
07/23/02	12:45:02	91.431
07/23/02	12:46:02	92.426
07/23/02	12:47:02	91.715
07/23/02	12:48:02	92.142
07/23/02	12:49:02	92.142
07/23/02	12:50:02	91.800
07/23/02	12:51:02	92.255
07/23/02	12:52:02	91.431
07/23/02	12:53:02	92.341
07/23/02	12:54:02	92.511
07/23/02	12:55:02	91.886
07/23/02	12:56:02	92.056
07/23/02	12:57:02	93.137
07/23/02	12:58:02	91.345
07/23/02	12:59:02	92.056
07/23/02	13:00:02	92.767
07/23/02	13:01:02	94.730
07/23/02	13:02:02	92.056
07/23/02	13:03:02	93.308
07/23/02	13:04:02	92.056
07/23/02	13:05:02	91.886
07/23/02	13:06:02	92.511
07/23/02	13:07:02	92.426
07/23/02	13:08:02	92.682
07/23/02	13:09:02	91.089
07/23/02	13:10:02	93.052
07/23/02	13:11:02	90.549
07/23/02	13:12:02	91.260
07/23/02	13:13:02	93.564
07/23/02	13:14:02	91.630
07/23/02	13:15:02	92.341
07/23/02	13:16:02	92.255
07/23/02	13:17:02	91.431
07/23/02	13:18:02	92.056
07/23/02	13:19:02	91.004
07/23/02	13:20:02	90.634
07/23/02	13:21:02	90.748
07/23/02	13:22:02	91.544
07/23/02	13:23:02	91.345
07/23/02	13:24:02	91.800
07/23/02	13:25:02	91.630
07/23/02	13:26:02	91.544
07/23/02	13:27:02	91.715
07/23/02	13:28:02	90.833
07/23/02	13:29:02	91.544
07/23/02	13:30:02	91.715
07/23/02	13:31:02	90.634
07/23/02	13:32:02	91.345
07/23/02	13:33:02	91.800
07/23/02	13:34:02	91.630
07/23/02	13:35:02	91.431

Date	Time	Pres (PSI)
07/23/02	13:36:02	91.800
07/23/02	13:37:02	91.630
07/23/02	13:38:02	91.800
07/23/02	13:39:02	91.544
07/23/02	13:40:02	90.919
07/23/02	13:41:02	90.919
07/23/02	13:42:02	90.464
07/23/02	13:43:02	91.544
07/23/02	13:44:02	91.004
07/23/02	13:45:02	91.431
07/23/02	13:46:02	91.971
07/23/02	13:47:02	92.341
07/23/02	13:48:02	91.630
07/23/02	13:49:02	91.715
07/23/02	13:50:02	91.004
07/23/02	13:51:02	91.630
07/23/02	13:52:02	92.255
07/23/02	13:53:02	91.630
07/23/02	13:54:02	91.630
07/23/02	13:55:02	91.175
07/23/02	13:56:02	91.431
07/23/02	13:57:02	90.919
07/23/02	13:58:02	91.800
07/23/02	13:59:02	92.056
07/23/02	14:00:02	91.886
07/23/02	14:01:02	91.544
07/23/02	14:02:02	91.004
07/23/02	14:03:02	91.345
07/23/02	14:04:02	91.715
07/23/02	14:05:02	91.715
07/23/02	14:06:02	91.715
07/23/02	14:07:02	91.004
07/23/02	14:08:02	91.800
07/23/02	14:09:02	90.293
07/23/02	14:10:02	91.004
07/23/02	14:11:02	92.426
07/23/02	14:12:02	91.004
07/23/02	14:13:02	91.175
07/23/02	14:14:02	91.715
07/23/02	14:15:02	91.260
07/23/02	14:16:02	89.753
07/23/02	14:17:02	91.886
07/23/02	14:18:02	91.886
07/23/02	14:19:02	91.260
07/23/02	14:20:02	91.715
07/23/02	14:21:02	92.255
07/23/02	14:22:02	91.886
07/23/02	14:23:02	90.634
07/23/02	14:24:02	91.544
07/23/02	14:25:02	91.004
07/23/02	14:26:02	91.345
07/23/02	14:27:02	91.431
07/23/02	14:28:02	89.212
07/23/02	14:29:02	91.431
07/23/02	14:30:02	92.511
07/23/02	14:31:02	91.630
07/23/02	14:32:02	91.886
07/23/02	14:33:02	92.511
07/23/02	14:34:02	91.715
07/23/02	14:35:02	92.056
07/23/02	14:36:02	91.345
07/23/02	14:37:02	91.544
07/23/02	14:38:02	91.089
07/23/02	14:39:02	90.833
07/23/02	14:40:02	91.544
07/23/02	14:41:02	91.886

CHESTNUT AND WALNUT - NO. 7488 cont.

Date	Time	Pres (PSI)
07/23/02	14:42:02	90.634
07/23/02	14:43:02	86.653
07/23/02	14:44:02	84.264
07/23/02	14:45:02	90.037
07/23/02	14:46:02	68.566
07/23/02	14:47:02	74.510
07/23/02	14:48:02	72.377
07/23/02	14:49:02	72.917
07/23/02	14:50:02	73.088
07/23/02	14:51:02	73.429
07/23/02	14:52:02	72.917
07/23/02	14:53:02	73.713
07/23/02	14:54:02	73.514
07/23/02	14:55:02	72.803
07/23/02	14:56:02	73.258
07/23/02	14:57:02	72.803
07/23/02	14:58:02	72.718
07/23/02	14:59:02	73.002
07/23/02	15:00:02	70.414
07/23/02	15:01:02	72.377
07/23/02	15:02:02	71.040
07/23/02	15:03:02	73.514
07/23/02	15:04:02	72.291
07/23/02	15:05:02	72.291
07/23/02	15:06:02	75.306
07/23/02	15:07:02	86.312
07/23/02	15:08:02	83.724
07/23/02	15:09:02	85.316
07/23/02	15:10:02	83.638
07/23/02	15:11:02	83.894
07/23/02	15:12:02	84.691
07/23/02	15:13:02	83.724
07/23/02	15:14:02	84.520
07/23/02	15:15:02	83.809
07/23/02	15:16:02	84.349
07/23/02	15:17:02	83.269
07/23/02	15:18:02	85.146
07/23/02	15:19:02	84.179
07/23/02	15:20:02	83.269
07/23/02	15:21:02	83.013
07/23/02	15:22:02	85.402
07/23/02	15:23:02	83.269
07/23/02	15:24:02	84.520
07/23/02	15:25:02	83.894
07/23/02	15:26:02	85.146
07/23/02	15:27:02	82.927
07/23/02	15:28:02	85.146
07/23/02	15:29:02	83.468
07/23/02	15:30:02	83.468
07/23/02	15:31:02	84.691
07/23/02	15:32:02	84.520
07/23/02	15:33:02	82.216
07/23/02	15:34:02	65.352
07/23/02	15:35:02	70.329
07/23/02	15:36:02	69.447
07/23/02	15:37:02	69.533
07/23/02	15:38:02	70.329
07/23/02	15:39:02	69.362
07/23/02	15:40:02	70.414
07/23/02	15:41:02	69.447
07/23/02	15:42:02	69.533
07/23/02	15:43:02	69.988
07/23/02	15:44:02	69.874
07/23/02	15:45:02	69.618
07/23/02	15:46:02	68.651
07/23/02	15:47:02	68.907
07/23/02	15:48:02	69.192
07/23/02	15:49:02	68.196
07/23/02	15:50:02	68.651
07/23/02	15:51:02	67.770
07/23/02	15:52:02	71.211
07/23/02	15:53:02	81.164
07/23/02	15:54:02	81.591
07/23/02	15:55:02	94.900
07/23/02	15:56:02	94.644
07/23/02	15:57:02	94.019
07/23/02	15:58:02	94.189
07/23/02	15:59:02	93.137
07/23/02	16:00:02	93.848
07/23/02	16:01:02	93.933
07/23/02	16:02:02	94.104
07/23/02	16:03:02	94.644
07/23/02	16:04:02	91.175
07/23/02	16:05:02	93.137
07/23/02	16:06:02	93.308
07/23/02	16:07:02	93.933
07/23/02	16:08:02	92.938
07/23/02	16:09:02	94.019
07/23/02	16:10:02	94.985
07/23/02	16:11:02	93.933
07/23/02	16:12:02	94.274
07/23/02	16:13:02	94.189
07/23/02	16:14:02	94.019
07/23/02	16:15:02	94.360
07/23/02	16:16:02	94.019
07/23/02	16:17:02	93.933
07/23/02	16:18:02	59.153
07/23/02	16:19:02	95.981
07/23/02	16:20:02	78.235
07/23/02	16:21:02	84.975
07/23/02	16:22:02	85.316
07/23/02	16:23:02	81.335
07/23/02	16:24:02	84.179
07/23/02	16:25:02	84.691
07/23/02	16:26:02	82.927
07/23/02	16:27:02	84.093
07/23/02	16:28:02	84.093
07/23/02	16:29:02	81.875
07/23/02	16:30:02	84.435
07/23/02	16:31:02	83.553
07/23/02	16:32:02	83.724
07/23/02	16:33:02	
102.180		
07/23/02	16:34:02	92.255
07/23/02	16:35:02	91.886
07/23/02	16:36:02	91.715
07/23/02	16:37:02	91.630
07/23/02	16:38:02	91.089
07/23/02	16:39:02	91.345
07/23/02	16:40:02	91.004
07/23/02	16:41:02	91.800
07/23/02	16:42:02	91.260
07/23/02	16:43:02	90.378
07/23/02	16:44:02	91.345
07/23/02	16:45:02	92.255
07/23/02	16:46:02	89.667
07/23/02	16:47:02	90.919
07/23/02	16:48:02	92.142
07/23/02	16:49:02	90.634
07/23/02	16:50:02	90.748
07/23/02	16:51:02	91.431
07/23/02	16:52:02	90.748
07/23/02	16:53:02	90.748
07/23/02	16:54:02	90.549
07/23/02	16:55:02	90.378
07/23/02	16:56:02	91.089
07/23/02	16:57:02	89.212
07/23/02	16:58:02	90.464
07/23/02	16:59:02	90.748
07/23/02	17:00:02	90.037
07/23/02	17:01:02	90.919
07/23/02	17:02:02	90.208
07/23/02	17:03:02	91.089
07/23/02	17:04:02	91.544
07/23/02	17:05:02	90.122
07/23/02	17:06:02	90.919
07/23/02	17:07:02	90.919
07/23/02	17:08:02	90.833
07/23/02	17:09:02	90.293
07/23/02	17:10:02	90.634
07/23/02	17:11:02	90.833
07/23/02	17:12:02	91.260
07/23/02	17:13:02	90.748
07/23/02	17:14:02	91.345
07/23/02	17:15:02	90.919
07/23/02	17:16:02	90.634
07/23/02	17:17:02	92.142
07/23/02	17:18:02	90.919
07/23/02	17:19:02	90.748
07/23/02	17:20:02	90.549
07/23/02	17:21:02	90.293
07/23/02	17:22:02	90.122
07/23/02	17:23:02	90.293
07/23/02	17:24:02	90.634
07/23/02	17:25:02	90.748
07/23/02	17:26:02	89.923
07/23/02	17:27:02	89.838
07/23/02	17:28:02	90.293
07/23/02	17:29:02	90.122
07/23/02	17:30:02	89.838
07/23/02	17:31:02	89.923
07/23/02	17:32:02	90.919
07/23/02	17:33:02	90.549
07/23/02	17:34:02	90.037
07/23/02	17:35:02	89.753
07/23/02	17:36:02	90.122
07/23/02	17:37:02	89.753
07/23/02	17:38:02	90.208
07/23/02	17:39:02	90.208
07/23/02	17:40:02	90.464
07/23/02	17:41:02	90.037
07/23/02	17:42:02	90.833
07/23/02	17:43:02	90.378
07/23/02	17:44:02	90.378
07/23/02	17:45:02	89.753
07/23/02	17:46:02	89.667
07/23/02	17:47:02	90.037
07/23/02	17:48:02	90.037
07/23/02	17:49:02	89.582
07/23/02	17:50:02	90.208
07/23/02	17:51:02	89.411
07/23/02	17:52:02	89.838
07/23/02	17:53:02	90.464
07/23/02	17:54:02	90.634
07/23/02	17:55:02	90.378
07/23/02	17:56:02	91.175
07/23/02	17:57:02	89.753
07/23/02	17:58:02	90.378
07/23/02	17:59:02	90.037
07/23/02	18:00:02	90.037
07/23/02	18:01:02	89.753
07/23/02	18:02:02	90.208
07/23/02	18:03:02	89.326
07/23/02	18:04:02	89.753
07/23/02	18:05:02	90.208
07/23/02	18:06:02	90.037
07/23/02	18:07:02	89.838
07/23/02	18:08:02	90.464
07/23/02	18:09:02	89.212
07/23/02	18:10:02	89.497
07/23/02	18:11:02	89.667
07/23/02	18:12:02	88.956
07/23/02	18:13:02	89.838
07/23/02	18:14:02	89.497
07/23/02	18:15:02	89.923
07/23/02	18:16:02	89.497
07/23/02	18:17:02	90.037
07/23/02	18:18:02	89.753
07/23/02	18:19:02	90.122
07/23/02	18:20:02	89.582
07/23/02	18:21:02	89.667
07/23/02	18:22:02	90.037
07/23/02	18:23:02	90.464
07/23/02	18:24:02	89.667
07/23/02	18:25:02	89.582
07/23/02	18:26:02	90.378
07/23/02	18:27:02	90.122
07/23/02	18:28:02	89.497
07/23/02	18:29:02	89.923
07/23/02	18:30:02	90.748
07/23/02	18:31:02	89.497
07/23/02	18:32:02	91.715
07/23/02	18:33:02	89.582
07/23/02	18:34:02	90.122
07/23/02	18:35:02	90.037
07/23/02	18:36:02	90.122
07/23/02	18:37:02	90.748
07/23/02	18:38:02	90.464
07/23/02	18:39:02	90.208
07/23/02	18:40:02	90.122
07/23/02	18:41:02	90.634
07/23/02	18:42:02	90.208
07/23/02	18:43:02	90.634
07/23/02	18:44:02	90.464
07/23/02	18:45:02	90.208
07/23/02	18:46:02	90.208
07/23/02	18:47:02	91.089
07/23/02	18:48:02	88.701
07/23/02	18:49:02	91.630
07/23/02	18:50:02	90.634
07/23/02	18:51:02	90.293
07/23/02	18:52:02	90.833
07/23/02	18:53:02	88.331
07/23/02	18:54:02	90.748
07/23/02	18:55:02	91.345
07/23/02	18:56:02	89.582
07/23/02	18:57:02	91.886
07/23/02	18:58:02	90.634
07/23/02	18:59:02	90.833
07/23/02	19:00:02	91.004
07/23/02	19:01:02	90.464
07/23/02	19:02:02	87.819
07/23/02	19:03:02	90.549
07/23/02	19:04:02	90.122

CHESTNUT AND WALNUT - NO. 7488 cont.

Date	Time	Pres (PSI)
07/23/02	19:05:02	90.208
07/23/02	19:06:02	90.293
07/23/02	19:07:02	89.923
07/23/02	19:08:02	90.748
07/23/02	19:09:02	89.326
07/23/02	19:10:02	90.037
07/23/02	19:11:02	90.208
07/23/02	19:12:02	90.378
07/23/02	19:13:02	89.667
07/23/02	19:14:02	89.923
07/23/02	19:15:02	90.037
07/23/02	19:16:02	90.833
07/23/02	19:17:02	90.464
07/23/02	19:18:02	90.293
07/23/02	19:19:02	91.971
07/23/02	19:20:02	90.919
07/23/02	19:21:02	90.833
07/23/02	19:22:02	90.748
07/23/02	19:23:02	90.549
07/23/02	19:24:02	90.919
07/23/02	19:25:02	89.753
07/23/02	19:26:02	90.634
07/23/02	19:27:02	90.748
07/23/02	19:28:02	90.464
07/23/02	19:29:02	89.923
07/23/02	19:30:02	90.748
07/23/02	19:31:02	90.293
07/23/02	19:32:02	89.923
07/23/02	19:33:02	90.634
07/23/02	19:34:02	90.833
07/23/02	19:35:02	90.833
07/23/02	19:36:02	90.919
07/23/02	19:37:02	89.667
07/23/02	19:38:02	90.208
07/23/02	19:39:02	90.549
07/23/02	19:40:02	90.634
07/23/02	19:41:02	90.919
07/23/02	19:42:02	90.549
07/23/02	19:43:02	90.464
07/23/02	19:44:02	90.208
07/23/02	19:45:02	89.667
07/23/02	19:46:02	90.037
07/23/02	19:47:02	90.208
07/23/02	19:48:02	90.919
07/23/02	19:49:02	91.004
07/23/02	19:50:02	91.345
07/23/02	19:51:02	90.634
07/23/02	19:52:02	91.089
07/23/02	19:53:02	90.833
07/23/02	19:54:02	91.004
07/23/02	19:55:02	90.549
07/23/02	19:56:02	91.175
07/23/02	19:57:02	90.549
07/23/02	19:58:02	90.293
07/23/02	19:59:02	90.378
07/23/02	20:00:02	90.208
07/23/02	20:01:02	88.956
07/23/02	20:02:02	90.634
07/23/02	20:03:02	90.293
07/23/02	20:04:02	90.378
07/23/02	20:05:02	90.748
07/23/02	20:06:02	91.004
07/23/02	20:07:02	90.634
07/23/02	20:08:02	91.431
07/23/02	20:09:02	91.971
07/23/02	20:10:02	91.089
07/23/02	20:11:02	91.431
07/23/02	20:12:02	91.175
07/23/02	20:13:02	91.004
07/23/02	20:14:02	90.549
07/23/02	20:15:02	90.833
07/23/02	20:16:02	91.004
07/23/02	20:17:02	90.122
07/23/02	20:18:02	90.833
07/23/02	20:19:02	90.833
07/23/02	20:20:02	91.004
07/23/02	20:21:02	90.122
07/23/02	20:22:02	90.464
07/23/02	20:23:02	90.919
07/23/02	20:24:02	91.345
07/23/02	20:25:02	90.919
07/23/02	20:26:02	91.175
07/23/02	20:27:02	89.127
07/23/02	20:28:02	91.431
07/23/02	20:29:02	90.833
07/23/02	20:30:02	90.293
07/23/02	20:31:02	90.748
07/23/02	20:32:02	91.175
07/23/02	20:33:02	91.175
07/23/02	20:34:02	90.748
07/23/02	20:35:02	91.089
07/23/02	20:36:02	91.175
07/23/02	20:37:02	90.919
07/23/02	20:38:02	91.175
07/23/02	20:39:02	91.715
07/23/02	20:40:02	91.089
07/23/02	20:41:02	90.833
07/23/02	20:42:02	89.212
07/23/02	20:43:02	91.175
07/23/02	20:44:02	91.431
07/23/02	20:45:02	90.919
07/23/02	20:46:02	91.089
07/23/02	20:47:02	91.715
07/23/02	20:48:02	90.833
07/23/02	20:49:02	90.833
07/23/02	20:50:02	90.549
07/23/02	20:51:02	91.431
07/23/02	20:52:02	91.886
07/23/02	20:53:02	90.122
07/23/02	20:54:02	91.431
07/23/02	20:55:02	91.004
07/23/02	20:56:02	91.431
07/23/02	20:57:02	90.378
07/23/02	20:58:02	63.418
07/23/02	20:59:02	93.137
07/23/02	21:00:02	84.804
07/23/02	21:01:02	85.771
07/23/02	21:02:02	83.013
07/23/02	21:03:02	84.691
07/23/02	21:04:02	85.060
07/23/02	21:05:02	84.605
07/23/02	21:06:02	85.231
07/23/02	21:07:02	84.691
07/23/02	21:08:02	84.093
07/23/02	21:09:02	85.060
07/23/02	21:10:02	84.975
07/23/02	21:11:02	85.146
07/23/02	21:12:02	85.402
07/23/02	21:13:02	85.231
07/23/02	21:14:02	86.113
07/23/02	21:15:02	84.691
07/23/02	21:16:02	83.894
07/23/02	21:17:02	83.894
07/23/02	21:18:02	85.686
07/23/02	21:19:02	85.686
07/23/02	21:20:02	84.349
07/23/02	21:21:02	86.312
07/23/02	21:22:02	86.027
07/23/02	21:23:02	84.179
07/23/02	21:24:02	85.771
07/23/02	21:25:02	85.857
07/23/02	21:26:02	85.146
07/23/02	21:27:02	85.146
07/23/02	21:28:02	85.686
07/23/02	21:29:02	84.890
07/23/02	21:30:02	84.605
07/23/02	21:31:02	85.686
07/23/02	21:32:02	83.468
07/23/02	21:33:02	85.316
07/23/02	21:34:02	84.890
07/23/02	21:35:02	84.804
07/23/02	21:36:02	82.586
07/23/02	21:37:02	85.231
07/23/02	21:38:02	84.890
07/23/02	21:39:02	85.146
07/23/02	21:40:02	85.771
07/23/02	21:41:02	84.435
07/23/02	21:42:02	83.809
07/23/02	21:43:02	83.183
07/23/02	21:44:02	84.890
07/23/02	21:45:02	84.435
07/23/02	21:46:02	84.605
07/23/02	21:47:02	84.264
07/23/02	21:48:02	85.231
07/23/02	21:49:02	84.605
07/23/02	21:50:02	84.605
07/23/02	21:51:02	85.601
07/23/02	21:52:02	84.605
07/23/02	21:53:02	85.601
07/23/02	21:54:02	84.804
07/23/02	21:55:02	85.146
07/23/02	21:56:02	85.146
07/23/02	21:57:02	84.890
07/23/02	21:58:02	85.487
07/23/02	21:59:02	85.686
07/23/02	22:00:02	85.316
07/23/02	22:01:02	84.179
07/23/02	22:02:02	84.804
07/23/02	22:03:02	83.980
07/23/02	22:04:02	84.890
07/23/02	22:05:02	85.857
07/23/02	22:06:02	83.809
07/23/02	22:07:02	85.316
07/23/02	22:08:02	85.686
07/23/02	22:09:02	84.179
07/23/02	22:10:02	84.975
07/23/02	22:11:02	84.804
07/23/02	22:12:02	83.809
07/23/02	22:13:02	85.060
07/23/02	22:14:02	83.980
07/23/02	22:15:02	85.060
07/23/02	22:16:02	84.975
07/23/02	22:17:02	83.980
07/23/02	22:18:02	84.890
07/23/02	22:19:02	84.435
07/23/02	22:20:02	85.771
07/23/02	22:21:02	84.435
07/23/02	22:22:02	85.686
07/23/02	22:23:02	85.316
07/23/02	22:24:02	83.724
07/23/02	22:25:02	84.349
07/23/02	22:26:02	86.198
07/23/02	22:27:02	84.093
07/23/02	22:28:02	85.857
07/23/02	22:29:02	84.264
07/23/02	22:30:02	84.435
07/23/02	22:31:02	83.183
07/23/02	22:32:02	84.093
07/23/02	22:33:02	82.927
07/23/02	22:34:02	84.975
07/23/02	22:35:02	84.890
07/23/02	22:36:02	84.093
07/23/02	22:37:02	84.520
07/23/02	22:38:02	84.349
07/23/02	22:39:02	83.468
07/23/02	22:40:02	85.402
07/23/02	22:41:02	84.605
07/23/02	22:42:02	82.842
07/23/02	22:43:02	85.402
07/23/02	22:44:02	84.264
07/23/02	22:45:02	84.804
07/23/02	22:46:02	84.975
07/23/02	22:47:02	85.231
07/23/02	22:48:02	84.520
07/23/02	22:49:02	84.435
07/23/02	22:50:02	84.435
07/23/02	22:51:02	85.231
07/23/02	22:52:02	85.060
07/23/02	22:53:02	85.316
07/23/02	22:54:02	84.349
07/23/02	22:55:02	84.435
07/23/02	22:56:02	84.605
07/23/02	22:57:02	85.686
07/23/02	22:58:02	84.435
07/23/02	22:59:02	85.857
07/23/02	23:00:02	85.316
07/23/02	23:01:02	85.601
07/23/02	23:02:02	84.349
07/23/02	23:03:02	84.520
07/23/02	23:04:02	85.231
07/23/02	23:05:02	85.771
07/23/02	23:06:02	84.691
07/23/02	23:07:02	84.264
07/23/02	23:08:02	85.231
07/23/02	23:09:02	85.146
07/23/02	23:10:02	85.686
07/23/02	23:11:02	83.638
07/23/02	23:12:02	84.691
07/23/02	23:13:02	83.894
07/23/02	23:14:02	85.316
07/23/02	23:15:02	84.890
07/23/02	23:16:02	85.231
07/23/02	23:17:02	86.113
07/23/02	23:18:02	85.060
07/23/02	23:19:02	84.975
07/23/02	23:20:02	84.605
07/23/02	23:21:02	84.975
07/23/02	23:22:02	84.435
07/23/02	23:23:02	85.942
07/23/02	23:24:02	85.402
07/23/02	23:25:02	83.269
07/23/02	23:26:02	85.942
07/23/02	23:27:02	84.890
07/23/02	23:28:02	84.975

CHESTNUT AND WALNUT - NO. 7488 cont.

Date	Time	Pres (PSI)
07/23/02	23:29:02	85.601
07/23/02	23:30:02	84.520
07/23/02	23:31:02	84.520
07/23/02	23:32:02	85.686
07/23/02	23:33:02	83.724
07/23/02	23:34:02	85.601
07/23/02	23:35:02	85.487
07/23/02	23:36:02	84.605
07/23/02	23:37:02	85.601
07/23/02	23:38:02	84.435
07/23/02	23:39:02	86.198
07/23/02	23:40:02	84.264
07/23/02	23:41:02	85.686
07/23/02	23:42:02	86.653
07/23/02	23:43:02	84.605
07/23/02	23:44:02	85.942
07/23/02	23:45:02	85.686
07/23/02	23:46:02	85.402
07/23/02	23:47:02	86.397
07/23/02	23:48:02	84.691
07/23/02	23:49:02	86.482
07/23/02	23:50:02	84.349
07/23/02	23:51:02	85.316
07/23/02	23:52:02	85.686
07/23/02	23:53:02	84.520
07/23/02	23:54:02	84.975
07/23/02	23:55:02	86.027
07/23/02	23:56:02	83.980
07/23/02	23:57:02	85.686
07/23/02	23:58:02	85.686
07/23/02	23:59:02	83.894
07/24/02	00:00:02	84.691
07/24/02	00:01:02	85.487
07/24/02	00:02:02	86.027
07/24/02	00:03:02	84.093
07/24/02	00:04:02	84.890
07/24/02	00:05:02	84.520
07/24/02	00:06:02	83.980
07/24/02	00:07:02	85.231
07/24/02	00:08:02	85.402
07/24/02	00:09:02	85.060
07/24/02	00:10:02	85.686
07/24/02	00:11:02	84.691
07/24/02	00:12:02	84.520
07/24/02	00:13:02	85.402
07/24/02	00:14:02	84.804
07/24/02	00:15:02	84.691
07/24/02	00:16:02	84.520
07/24/02	00:17:02	84.435
07/24/02	00:18:02	86.738
07/24/02	00:19:02	84.435
07/24/02	00:20:02	85.402
07/24/02	00:21:02	84.520
07/24/02	00:22:02	85.402
07/24/02	00:23:02	84.520
07/24/02	00:24:02	84.605
07/24/02	00:25:02	84.264
07/24/02	00:26:02	85.402
07/24/02	00:27:02	84.349
07/24/02	00:28:02	86.113
07/24/02	00:29:02	84.691
07/24/02	00:30:02	84.264
07/24/02	00:31:02	85.857
07/24/02	00:32:02	84.804
07/24/02	00:33:02	84.605
07/24/02	00:34:02	84.435
07/24/02	00:35:02	84.975
07/24/02	00:36:02	84.975
07/24/02	00:37:02	84.804
07/24/02	00:38:02	85.146
07/24/02	00:39:02	84.435
07/24/02	00:40:02	85.316
07/24/02	00:41:02	84.520
07/24/02	00:42:02	85.146
07/24/02	00:43:02	83.980
07/24/02	00:44:02	85.686
07/24/02	00:45:02	85.231
07/24/02	00:46:02	85.601
07/24/02	00:47:02	84.975
07/24/02	00:48:02	85.316
07/24/02	00:49:02	83.894
07/24/02	00:50:02	85.942
07/24/02	00:51:02	83.382
07/24/02	00:52:02	84.890
07/24/02	00:53:02	83.724
07/24/02	00:54:02	88.701
07/24/02	00:55:02	84.349
07/24/02	00:56:02	86.312
07/24/02	00:57:02	86.113
07/24/02	00:58:02	85.857
07/24/02	00:59:02	86.653
07/24/02	01:00:02	84.804
07/24/02	01:01:02	86.482
07/24/02	01:02:02	84.179
07/24/02	01:03:02	86.312
07/24/02	01:04:02	86.312
07/24/02	01:05:02	85.857
07/24/02	01:06:02	85.686
07/24/02	01:07:02	85.857
07/24/02	01:08:02	86.397
07/24/02	01:09:02	86.027
07/24/02	01:10:02	85.601
07/24/02	01:11:02	86.312
07/24/02	01:12:02	85.601
07/24/02	01:13:02	86.198
07/24/02	01:14:02	85.487
07/24/02	01:15:02	85.771
07/24/02	01:16:02	86.113
07/24/02	01:17:02	85.942
07/24/02	01:18:02	85.857
07/24/02	01:19:02	86.397
07/24/02	01:20:02	86.653
07/24/02	01:21:02	84.605
07/24/02	01:22:02	86.824
07/24/02	01:23:02	85.316
07/24/02	01:24:02	86.198
07/24/02	01:25:02	86.198
07/24/02	01:26:02	85.601
07/24/02	01:27:02	86.568
07/24/02	01:28:02	86.312
07/24/02	01:29:02	85.487
07/24/02	01:30:02	85.771
07/24/02	01:31:02	85.402
07/24/02	01:32:02	86.824
07/24/02	01:33:02	86.397
07/24/02	01:34:02	85.316
07/24/02	01:35:02	86.994
07/24/02	01:36:02	85.487
07/24/02	01:37:02	86.198
07/24/02	01:38:02	85.686
07/24/02	01:39:02	85.857
07/24/02	01:40:02	86.312
07/24/02	01:41:02	85.771
07/24/02	01:42:02	85.857
07/24/02	01:43:02	85.771
07/24/02	01:44:02	85.686
07/24/02	01:45:02	85.857
07/24/02	01:46:02	86.738
07/24/02	01:47:02	85.686
07/24/02	01:48:02	85.942
07/24/02	01:49:02	85.857
07/24/02	01:50:02	86.568
07/24/02	01:51:02	85.771
07/24/02	01:52:02	86.909
07/24/02	01:53:02	85.487
07/24/02	01:54:02	86.113
07/24/02	01:55:02	84.264
07/24/02	01:56:02	86.909
07/24/02	01:57:02	85.857
07/24/02	01:58:02	85.857
07/24/02	01:59:02	86.312
07/24/02	02:00:02	86.482
07/24/02	02:01:02	85.771
07/24/02	02:02:02	86.312
07/24/02	02:03:02	85.316
07/24/02	02:04:02	84.975
07/24/02	02:05:02	86.824
07/24/02	02:06:02	85.487
07/24/02	02:07:02	86.397
07/24/02	02:08:02	85.686
07/24/02	02:09:02	85.487
07/24/02	02:10:02	86.027
07/24/02	02:11:02	85.857
07/24/02	02:12:02	85.857
07/24/02	02:13:02	85.942
07/24/02	02:14:02	85.857
07/24/02	02:15:02	85.601
07/24/02	02:16:02	85.601
07/24/02	02:17:02	86.027
07/24/02	02:18:02	85.686
07/24/02	02:19:02	85.487
07/24/02	02:20:02	85.942
07/24/02	02:21:02	86.568
07/24/02	02:22:02	86.027
07/24/02	02:23:02	85.601
07/24/02	02:24:02	84.975
07/24/02	02:25:02	86.568
07/24/02	02:26:02	85.942
07/24/02	02:27:02	86.482
07/24/02	02:28:02	85.402
07/24/02	02:29:02	86.113
07/24/02	02:30:02	85.402
07/24/02	02:31:02	86.027
07/24/02	02:32:02	85.402
07/24/02	02:33:02	85.402
07/24/02	02:34:02	86.198
07/24/02	02:35:02	85.857
07/24/02	02:36:02	85.316
07/24/02	02:37:02	86.198
07/24/02	02:38:02	86.312
07/24/02	02:39:02	85.601
07/24/02	02:40:02	86.738
07/24/02	02:41:02	86.198
07/24/02	02:42:02	85.316
07/24/02	02:43:02	86.198
07/24/02	02:44:02	85.402
07/24/02	02:45:02	86.027
07/24/02	02:46:02	86.397
07/24/02	02:47:02	86.113
07/24/02	02:48:02	85.402
07/24/02	02:49:02	86.312
07/24/02	02:50:02	86.027
07/24/02	02:51:02	85.316
07/24/02	02:52:02	86.113
07/24/02	02:53:02	85.857
07/24/02	02:54:02	85.686
07/24/02	02:55:02	86.482
07/24/02	02:56:02	85.402
07/24/02	02:57:02	86.198
07/24/02	02:58:02	85.857
07/24/02	02:59:02	86.198
07/24/02	03:00:02	85.231
07/24/02	03:01:02	86.738
07/24/02	03:02:02	85.316
07/24/02	03:03:02	85.487
07/24/02	03:04:02	85.771
07/24/02	03:05:02	86.397
07/24/02	03:06:02	86.198
07/24/02	03:07:02	86.312
07/24/02	03:08:02	86.482
07/24/02	03:09:02	85.487
07/24/02	03:10:02	86.738
07/24/02	03:11:02	85.402
07/24/02	03:12:02	85.857
07/24/02	03:13:02	84.435
07/24/02	03:14:02	85.601
07/24/02	03:15:02	85.771
07/24/02	03:16:02	86.027
07/24/02	03:17:02	85.487
07/24/02	03:18:02	85.771
07/24/02	03:19:02	86.397
07/24/02	03:20:02	86.027
07/24/02	03:21:02	85.942
07/24/02	03:22:02	86.027
07/24/02	03:23:02	86.027
07/24/02	03:24:02	85.402
07/24/02	03:25:02	85.942
07/24/02	03:26:02	85.942
07/24/02	03:27:02	85.771
07/24/02	03:28:02	86.027
07/24/02	03:29:02	85.942
07/24/02	03:30:02	87.193
07/24/02	03:31:02	85.060
07/24/02	03:32:02	86.113
07/24/02	03:33:02	86.113
07/24/02	03:34:02	85.060
07/24/02	03:35:02	86.738
07/24/02	03:36:02	86.312
07/24/02	03:37:02	85.402
07/24/02	03:38:02	86.312
07/24/02	03:39:02	86.113
07/24/02	03:40:02	85.857
07/24/02	03:41:02	85.402
07/24/02	03:42:02	86.397
07/24/02	03:43:02	84.890
07/24/02	03:44:02	86.738
07/24/02	03:45:02	85.316
07/24/02	03:46:02	86.312
07/24/02	03:47:02	85.686
07/24/02	03:48:02	85.686
07/24/02	03:49:02	85.771
07/24/02	03:50:02	86.397
07/24/02	03:51:02	86.738
07/24/02	03:52:02	85.942

CHESTNUT AND WALNUT - NO. 7488 cont.

Date	Time	Pres (PSI)
07/24/02	03:53:02	85.146
07/24/02	03:54:02	85.231
07/24/02	03:55:02	85.771
07/24/02	03:56:02	85.686
07/24/02	03:57:02	85.771
07/24/02	03:58:02	85.402
07/24/02	03:59:02	86.027
07/24/02	04:00:02	84.804
07/24/02	04:01:02	85.402
07/24/02	04:02:02	85.771
07/24/02	04:03:02	86.198
07/24/02	04:04:02	85.942
07/24/02	04:05:02	85.942
07/24/02	04:06:02	85.686
07/24/02	04:07:02	85.231
07/24/02	04:08:02	85.771
07/24/02	04:09:02	85.857
07/24/02	04:10:02	86.113
07/24/02	04:11:02	85.771
07/24/02	04:12:02	85.771
07/24/02	04:13:02	85.402
07/24/02	04:14:02	85.601
07/24/02	04:15:02	86.198
07/24/02	04:16:02	86.738
07/24/02	04:17:02	86.027
07/24/02	04:18:02	85.942
07/24/02	04:19:02	86.113
07/24/02	04:20:02	85.857
07/24/02	04:21:02	85.771
07/24/02	04:22:02	85.231
07/24/02	04:23:02	87.364
07/24/02	04:24:02	85.771
07/24/02	04:25:02	86.312
07/24/02	04:26:02	85.402
07/24/02	04:27:02	85.942
07/24/02	04:28:02	85.942
07/24/02	04:29:02	85.771
07/24/02	04:30:02	86.312
07/24/02	04:31:02	85.857
07/24/02	04:32:02	85.942
07/24/02	04:33:02	86.113
07/24/02	04:34:02	85.601
07/24/02	04:35:02	86.312
07/24/02	04:36:02	86.312
07/24/02	04:37:02	86.482
07/24/02	04:38:02	85.231
07/24/02	04:39:02	85.686
07/24/02	04:40:02	86.312
07/24/02	04:41:02	85.686
07/24/02	04:42:02	86.824
07/24/02	04:43:02	86.482
07/24/02	04:44:02	86.027
07/24/02	04:45:02	85.942
07/24/02	04:46:02	86.397
07/24/02	04:47:02	85.146
07/24/02	04:48:02	86.198
07/24/02	04:49:02	86.909
07/24/02	04:50:02	85.601
07/24/02	04:51:02	86.027
07/24/02	04:52:02	86.113
07/24/02	04:53:02	86.312
07/24/02	04:54:02	85.686
07/24/02	04:55:02	86.653
07/24/02	04:56:02	86.482
07/24/02	04:57:02	86.113
07/24/02	04:58:02	86.027
07/24/02	04:59:02	85.857
07/24/02	05:00:02	86.312
07/24/02	05:01:02	86.027
07/24/02	05:02:02	85.060
07/24/02	05:03:02	86.568
07/24/02	05:04:02	86.027
07/24/02	05:05:02	85.487
07/24/02	05:06:02	86.397
07/24/02	05:07:02	85.686
07/24/02	05:08:02	86.198
07/24/02	05:09:02	86.027
07/24/02	05:10:02	86.198
07/24/02	05:11:02	85.686
07/24/02	05:12:02	86.198
07/24/02	05:13:02	86.027
07/24/02	05:14:02	85.686
07/24/02	05:15:02	86.113
07/24/02	05:16:02	85.771
07/24/02	05:17:02	85.601
07/24/02	05:18:02	86.568
07/24/02	05:19:02	85.686
07/24/02	05:20:02	84.975
07/24/02	05:21:02	86.312
07/24/02	05:22:02	85.942
07/24/02	05:23:02	85.857
07/24/02	05:24:02	86.113
07/24/02	05:25:02	85.487
07/24/02	05:26:02	86.482
07/24/02	05:27:02	85.231
07/24/02	05:28:02	86.027
07/24/02	05:29:02	86.994
07/24/02	05:30:02	85.601
07/24/02	05:31:02	86.113
07/24/02	05:32:02	87.108
07/24/02	05:33:02	85.146
07/24/02	05:34:02	86.568
07/24/02	05:35:02	86.027
07/24/02	05:36:02	85.402
07/24/02	05:37:02	86.397
07/24/02	05:38:02	84.890
07/24/02	05:39:02	86.482
07/24/02	05:40:02	85.402
07/24/02	05:41:02	86.312
07/24/02	05:42:02	86.909
07/24/02	05:43:02	86.113
07/24/02	05:44:02	86.482
07/24/02	05:45:02	85.060
07/24/02	05:46:02	86.482
07/24/02	05:47:02	84.349
07/24/02	05:48:02	85.942
07/24/02	05:49:02	85.857
07/24/02	05:50:02	85.601
07/24/02	05:51:02	86.397
07/24/02	05:52:02	86.113
07/24/02	05:53:02	86.198
07/24/02	05:54:02	85.601
07/24/02	05:55:02	85.857
07/24/02	05:56:02	85.316
07/24/02	05:57:02	86.312
07/24/02	05:58:02	85.146
07/24/02	05:59:02	85.771
07/24/02	06:00:02	85.942
07/24/02	06:01:02	86.653
07/24/02	06:02:02	86.397
07/24/02	06:03:02	86.397
07/24/02	06:04:02	86.198
07/24/02	06:05:02	85.487
07/24/02	06:06:02	86.312
07/24/02	06:07:02	85.686
07/24/02	06:08:02	85.857
07/24/02	06:09:02	85.686
07/24/02	06:10:02	86.482
07/24/02	06:11:02	85.231
07/24/02	06:12:02	86.653
07/24/02	06:13:02	85.146
07/24/02	06:14:02	85.942
07/24/02	06:15:02	86.994
07/24/02	06:16:02	85.686
07/24/02	06:17:02	85.857
07/24/02	06:18:02	86.482
07/24/02	06:19:02	85.857
07/24/02	06:20:02	85.060
07/24/02	06:21:02	85.942
07/24/02	06:22:02	85.857
07/24/02	06:23:02	86.909
07/24/02	06:24:02	86.198
07/24/02	06:25:02	84.804
07/24/02	06:26:02	85.601
07/24/02	06:27:02	85.402
07/24/02	06:28:02	86.312
07/24/02	06:29:02	85.060
07/24/02	06:30:02	86.909
07/24/02	06:31:02	85.601
07/24/02	06:32:02	85.857
07/24/02	06:33:02	85.601
07/24/02	06:34:02	85.487
07/24/02	06:35:02	86.027
07/24/02	06:36:02	86.198
07/24/02	06:37:02	96.151
07/24/02	06:38:02	85.487
07/24/02	06:39:02	86.994
07/24/02	06:40:02	88.331
07/24/02	06:41:02	87.364
07/24/02	06:42:02	87.620
07/24/02	06:43:02	87.193
07/24/02	06:44:02	87.364
07/24/02	06:45:02	87.620
07/24/02	06:46:02	86.113
07/24/02	06:47:02	88.331
07/24/02	06:48:02	86.568
07/24/02	06:49:02	87.990
07/24/02	06:50:02	87.449
07/24/02	06:51:02	87.819
07/24/02	06:52:02	87.535
07/24/02	06:53:02	87.279
07/24/02	06:54:02	87.535
07/24/02	06:55:02	87.904
07/24/02	06:56:02	85.771
07/24/02	06:57:02	87.705
07/24/02	06:58:02	86.653
07/24/02	06:59:02	87.705
07/24/02	07:00:02	87.990
07/24/02	07:01:02	86.909
07/24/02	07:02:02	86.824
07/24/02	07:03:02	87.819
07/24/02	07:04:02	87.279
07/24/02	07:05:02	87.819
07/24/02	07:06:02	87.990
07/24/02	07:07:02	87.819
07/24/02	07:08:02	87.819
07/24/02	07:09:02	87.535
07/24/02	07:10:02	88.786
07/24/02	07:11:02	87.279
07/24/02	07:12:02	87.705
07/24/02	07:13:02	86.397
07/24/02	07:14:02	86.909
07/24/02	07:15:02	86.738
07/24/02	07:16:02	87.620
07/24/02	07:17:02	85.771
07/24/02	07:18:02	87.108
07/24/02	07:19:02	86.909
07/24/02	07:20:02	87.535
07/24/02	07:21:02	87.449
07/24/02	07:22:02	87.620
07/24/02	07:23:02	87.193
07/24/02	07:24:02	86.653
07/24/02	07:25:02	88.075
07/24/02	07:26:02	87.279
07/24/02	07:27:02	86.994
07/24/02	07:28:02	86.994
07/24/02	07:29:02	86.994
07/24/02	07:30:02	88.075
07/24/02	07:31:02	88.701
07/24/02	07:32:02	86.994
07/24/02	07:33:02	88.245
07/24/02	07:34:02	86.482
07/24/02	07:35:02	86.568
07/24/02	07:36:02	86.482
07/24/02	07:37:02	87.193
07/24/02	07:38:02	86.824
07/24/02	07:39:02	86.909
07/24/02	07:40:02	86.653
07/24/02	07:41:02	86.824
07/24/02	07:42:02	86.909
07/24/02	07:43:02	87.108
07/24/02	07:44:02	87.620
07/24/02	07:45:02	87.904
07/24/02	07:46:02	86.909
07/24/02	07:47:02	88.871
07/24/02	07:48:02	87.620
07/24/02	07:49:02	87.705
07/24/02	07:50:02	85.231
07/24/02	07:51:02	86.198
07/24/02	07:52:02	87.535
07/24/02	07:53:02	87.535
07/24/02	07:54:02	87.990
07/24/02	07:55:02	87.904
07/24/02	07:56:02	88.075
07/24/02	07:57:02	87.819
07/24/02	07:58:02	88.245
07/24/02	07:59:02	87.620
07/24/02	08:00:02	87.193
07/24/02	08:01:02	87.364
07/24/02	08:02:02	87.705
07/24/02	08:03:02	87.449
07/24/02	08:04:02	87.904
07/24/02	08:05:02	88.416
07/24/02	08:06:02	87.819
07/24/02	08:07:02	87.819
07/24/02	08:08:02	87.904
07/24/02	08:09:02	86.909
07/24/02	08:10:02	88.160
07/24/02	08:11:02	87.193
07/24/02	08:12:02	87.364
07/24/02	08:13:02	87.279
07/24/02	08:14:02	87.279
07/24/02	08:15:02	88.160
07/24/02	08:16:02	87.705

CHESTNUT AND WALNUT - NO. 7488 cont.

Date	Time	Pres (PSI)
07/24/02	08:17:02	86.824
07/24/02	08:18:02	88.331
07/24/02	08:19:02	88.075
07/24/02	08:20:02	88.245
07/24/02	08:21:02	86.653
07/24/02	08:22:02	87.364
07/24/02	08:23:02	87.904
07/24/02	08:24:02	87.279
07/24/02	08:25:02	87.279
07/24/02	08:26:02	87.279
07/24/02	08:27:02	87.819
07/24/02	08:28:02	87.904
07/24/02	08:29:02	87.705
07/24/02	08:30:02	87.364
07/24/02	08:31:02	88.871
07/24/02	08:32:02	87.108
07/24/02	08:33:02	
102.351		
07/24/02	08:34:02	94.559
07/24/02	08:35:02	95.611
07/24/02	08:36:02	95.440
07/24/02	08:37:02	95.867
07/24/02	08:38:02	95.440
07/24/02	08:39:02	95.526
07/24/02	08:40:02	95.440
07/24/02	08:41:02	95.440
07/24/02	08:42:02	94.730
07/24/02	08:43:02	96.322
07/24/02	08:44:02	95.440
07/24/02	08:45:02	94.730
07/24/02	08:46:02	94.985
07/24/02	08:47:02	96.578
07/24/02	08:48:02	95.270
07/24/02	08:49:02	95.782
07/24/02	08:50:02	95.526
07/24/02	08:51:02	95.270
07/24/02	08:52:02	95.270
07/24/02	08:53:02	94.274
07/24/02	08:54:02	94.189
07/24/02	08:55:02	94.900
07/24/02	08:56:02	95.071
07/24/02	08:57:02	94.730
07/24/02	08:58:02	94.730
07/24/02	08:59:02	94.360
07/24/02	09:00:02	94.985
07/24/02	09:01:02	94.474
07/24/02	09:02:02	94.360
07/24/02	09:03:02	94.019
07/24/02	09:04:02	94.559
07/24/02	09:05:02	94.104
07/24/02	09:06:02	94.815
07/24/02	09:07:02	95.156
07/24/02	09:08:02	94.474
07/24/02	09:09:02	93.564
07/24/02	09:10:02	94.474
07/24/02	09:11:02	94.189
07/24/02	09:12:02	92.511
07/24/02	09:13:02	94.815
07/24/02	09:14:02	94.104
07/24/02	09:15:02	94.474
07/24/02	09:16:02	94.730
07/24/02	09:17:02	94.730
07/24/02	09:18:02	94.559
07/24/02	09:19:02	94.559
07/24/02	09:20:02	93.933
07/24/02	09:21:02	93.222

Date	Time	Pres (PSI)
07/24/02	09:22:02	94.644
07/24/02	09:23:02	94.189
07/24/02	09:24:02	94.730
07/24/02	09:25:02	94.019
07/24/02	09:26:02	94.559
07/24/02	09:27:02	94.360
07/24/02	09:28:02	94.559
07/24/02	09:29:02	94.019
07/24/02	09:30:02	93.848
07/24/02	09:31:02	94.019
07/24/02	09:32:02	95.355
07/24/02	09:33:02	94.360
07/24/02	09:34:02	94.274
07/24/02	09:35:02	94.104
07/24/02	09:36:02	94.644
07/24/02	09:37:02	94.019
07/24/02	09:38:02	94.104
07/24/02	09:39:02	93.933
07/24/02	09:40:02	93.848
07/24/02	09:41:02	93.649
07/24/02	09:42:02	95.526
07/24/02	09:43:02	94.644
07/24/02	09:44:02	93.649
07/24/02	09:45:02	94.274
07/24/02	09:46:02	94.019
07/24/02	09:47:02	94.730
07/24/02	09:48:02	94.474
07/24/02	09:49:02	94.360
07/24/02	09:50:02	95.782
07/24/02	09:51:02	94.900
07/24/02	09:52:02	93.222
07/24/02	09:53:02	93.933
07/24/02	09:54:02	94.104
07/24/02	09:55:02	94.644
07/24/02	09:56:02	95.270
07/24/02	09:57:02	94.474
07/24/02	09:58:02	94.815
07/24/02	09:59:02	94.559
07/24/02	10:00:02	95.071
07/24/02	10:01:02	95.071
07/24/02	10:02:02	94.730
07/24/02	10:03:02	94.985
07/24/02	10:04:02	94.985
07/24/02	10:05:02	95.440
07/24/02	10:06:02	94.474
07/24/02	10:07:02	94.644
07/24/02	10:08:02	94.360
07/24/02	10:09:02	95.270
07/24/02	10:10:02	94.730
07/24/02	10:11:02	95.071
07/24/02	10:12:02	95.270
07/24/02	10:13:02	95.270
07/24/02	10:14:02	94.274
07/24/02	10:15:02	94.730
07/24/02	10:16:02	94.104
07/24/02	10:17:02	94.815
07/24/02	10:18:02	94.900
07/24/02	10:19:02	94.559
07/24/02	10:20:02	94.900
07/24/02	10:21:02	94.474
07/24/02	10:22:02	94.274
07/24/02	10:23:02	95.071
07/24/02	10:24:02	95.782
07/24/02	10:25:02	94.360
07/24/02	10:26:02	94.559
07/24/02	10:27:02	94.644

Date	Time	Pres (PSI)
07/24/02	10:28:02	94.644
07/24/02	10:29:02	94.644
07/24/02	10:30:02	94.019
07/24/02	10:31:02	68.481
07/24/02	10:32:02	96.862
07/24/02	10:33:02	84.349
07/24/02	10:34:02	86.397
07/24/02	10:35:02	86.653
07/24/02	10:36:02	86.397
07/24/02	10:37:02	87.990
07/24/02	10:38:02	85.316
07/24/02	10:39:02	87.620
07/24/02	10:40:02	86.653
07/24/02	10:41:02	85.601
07/24/02	10:42:02	86.824
07/24/02	10:43:02	86.482
07/24/02	10:44:02	85.857
07/24/02	10:45:02	87.620
07/24/02	10:46:02	85.771
07/24/02	10:47:02	86.653
07/24/02	10:48:02	86.312
07/24/02	10:49:02	86.482
07/24/02	10:50:02	87.108
07/24/02	10:51:02	85.146
07/24/02	10:52:02	85.857
07/24/02	10:53:02	86.312
07/24/02	10:54:02	86.027
07/24/02	10:55:02	86.824
07/24/02	10:56:02	86.482
07/24/02	10:57:02	85.402
07/24/02	10:58:02	86.397
07/24/02	10:59:02	84.349
07/24/02	11:00:02	86.994
07/24/02	11:01:02	90.833
07/24/02	11:02:02	76.187
07/24/02	11:03:02	87.705
07/24/02	11:04:02	86.824
07/24/02	11:05:02	85.231
07/24/02	11:06:02	86.198
07/24/02	11:07:02	83.809
07/24/02	11:08:02	85.601
07/24/02	11:09:02	84.179
07/24/02	11:10:02	86.113
07/24/02	11:11:02	85.857
07/24/02	11:12:02	83.724
07/24/02	11:13:02	86.027
07/24/02	11:14:02	86.198
07/24/02	11:15:02	85.686
07/24/02	11:16:02	85.686
07/24/02	11:17:02	84.605
07/24/02	11:18:02	86.312
07/24/02	11:19:02	84.975
07/24/02	11:20:02	85.487
07/24/02	11:21:02	86.027
07/24/02	11:22:02	85.857
07/24/02	11:23:02	86.027
07/24/02	11:24:02	84.691
07/24/02	11:25:02	85.942
07/24/02	11:26:02	85.942
07/24/02	11:27:02	85.146
07/24/02	11:28:02	85.771
07/24/02	11:29:02	85.402
07/24/02	11:30:02	85.942
07/24/02	11:31:02	85.316
07/24/02	11:32:02	86.027
07/24/02	11:33:02	85.686

Date	Time	Pres (PSI)
07/24/02	11:34:02	86.027
07/24/02	11:35:02	85.146
07/24/02	11:36:02	85.231
07/24/02	11:37:02	86.738
07/24/02	11:38:02	86.482
07/24/02	11:39:02	85.771
07/24/02	11:40:02	85.487
07/24/02	11:41:02	86.994
07/24/02	11:42:02	86.198
07/24/02	11:43:02	86.027
07/24/02	11:44:02	83.638
07/24/02	11:45:02	87.108
07/24/02	11:46:02	85.857
07/24/02	11:47:02	86.738
07/24/02	11:48:02	86.653
07/24/02	11:49:02	85.146
07/24/02	11:50:02	86.312
07/24/02	11:51:02	85.771
07/24/02	11:52:02	85.942
07/24/02	11:53:02	86.027
07/24/02	11:54:02	85.060
07/24/02	11:55:02	86.113
07/24/02	11:56:02	86.027
07/24/02	11:57:02	85.686
07/24/02	11:58:02	84.975
07/24/02	11:59:02	85.601
07/24/02	12:00:02	85.316
07/24/02	12:01:02	85.686
07/24/02	12:02:02	86.397
07/24/02	12:03:02	85.060
07/24/02	12:04:02	85.857
07/24/02	12:05:02	85.771
07/24/02	12:06:02	85.231
07/24/02	12:07:02	85.231
07/24/02	12:08:02	85.060
07/24/02	12:09:02	85.316
07/24/02	12:10:02	84.349
07/24/02	12:11:02	86.027
07/24/02	12:12:02	86.653
07/24/02	12:13:02	85.231
07/24/02	12:14:02	85.487
07/24/02	12:15:02	85.771
07/24/02	12:16:02	85.942
07/24/02	12:17:02	86.312
07/24/02	12:18:02	84.605
07/24/02	12:19:02	86.027
07/24/02	12:20:02	85.146
07/24/02	12:21:02	86.027
07/24/02	12:22:02	84.691
07/24/02	12:23:02	85.060
07/24/02	12:24:02	84.975
07/24/02	12:25:02	86.397
07/24/02	12:26:02	85.146
07/24/02	12:27:02	84.975
07/24/02	12:28:02	84.975
07/24/02	12:29:02	85.231
07/24/02	12:30:02	85.316
07/24/02	12:31:02	86.482
07/24/02	12:32:02	85.771
07/24/02	12:33:02	85.771
07/24/02	12:34:02	85.857
07/24/02	12:35:02	86.482
07/24/02	12:36:02	86.027
07/24/02	12:37:02	85.402
07/24/02	12:38:02	85.857
07/24/02	12:39:02	84.605

CHESTNUT AND WALNUT - NO. 7488 cont.

Date	Time	Pres (PSI)
07/24/02	12:40:02	84.691
07/24/02	12:41:02	85.402
07/24/02	12:42:02	86.113
07/24/02	12:43:02	85.060
07/24/02	12:44:02	84.349
07/24/02	12:45:02	84.975
07/24/02	12:46:02	84.975
07/24/02	12:47:02	84.435
07/24/02	12:48:02	84.605
07/24/02	12:49:02	83.098
07/24/02	12:50:02	85.060
07/24/02	12:51:02	84.691
07/24/02	12:52:02	86.397
07/24/02	12:53:02	85.146
07/24/02	12:54:02	85.231
07/24/02	12:55:02	86.027
07/24/02	12:56:02	86.027
07/24/02	12:57:02	86.994
07/24/02	12:58:02	84.804
07/24/02	12:59:02	85.686
07/24/02	13:00:02	84.890
07/24/02	13:01:02	85.487
07/24/02	13:02:02	85.857
07/24/02	13:03:02	83.724
07/24/02	13:04:02	85.942
07/24/02	13:05:02	85.942
07/24/02	13:06:02	82.671
07/24/02	13:07:02	86.568
07/24/02	13:08:02	86.027
07/24/02	13:09:02	85.487
07/24/02	13:10:02	84.691
07/24/02	13:11:02	84.975
07/24/02	13:12:02	85.402
07/24/02	13:13:02	86.198
07/24/02	13:14:02	86.113
07/24/02	13:15:02	84.691
07/24/02	13:16:02	84.804
07/24/02	13:17:02	85.060
07/24/02	13:18:02	85.601
07/24/02	13:19:02	84.804
07/24/02	13:20:02	83.183
07/24/02	13:21:02	85.942
07/24/02	13:22:02	84.975
07/24/02	13:23:02	85.686
07/24/02	13:24:02	84.520
07/24/02	13:25:02	85.487
07/24/02	13:26:02	85.231
07/24/02	13:27:02	84.605
07/24/02	13:28:02	84.691
07/24/02	13:29:02	84.093
07/24/02	13:30:02	84.890
07/24/02	13:31:02	83.809
07/24/02	13:32:02	84.179
07/24/02	13:33:02	84.890
07/24/02	13:34:02	84.093
07/24/02	13:35:02	86.113
07/24/02	13:36:02	84.975
07/24/02	13:37:02	84.691
07/24/02	13:38:02	84.264
07/24/02	13:39:02	84.435
07/24/02	13:40:02	84.264
07/24/02	13:41:02	83.809
07/24/02	13:42:02	84.179
07/24/02	13:43:02	84.605
07/24/02	13:44:02	84.691
07/24/02	13:45:02	84.349
07/24/02	13:46:02	84.691
07/24/02	13:47:02	84.435
07/24/02	13:48:02	84.691
07/24/02	13:49:02	85.316
07/24/02	13:50:02	84.691
07/24/02	13:51:02	84.975
07/24/02	13:52:02	84.435
07/24/02	13:53:02	85.686
07/24/02	13:54:02	83.809
07/24/02	13:55:02	84.179
07/24/02	13:56:02	84.520
07/24/02	13:57:02	84.890
07/24/02	13:58:02	84.975
07/24/02	13:59:02	84.520
07/24/02	14:00:02	84.890
07/24/02	14:01:02	85.857
07/24/02	14:02:02	85.942
07/24/02	14:03:02	83.894
07/24/02	14:04:02	84.520
07/24/02	14:05:02	84.349
07/24/02	14:06:02	85.231
07/24/02	14:07:02	83.098
07/24/02	14:08:02	85.487
07/24/02	14:09:02	85.316
07/24/02	14:10:02	86.568
07/24/02	14:11:02	84.804
07/24/02	14:12:02	85.146
07/24/02	14:13:02	84.264
07/24/02	14:14:02	84.691
07/24/02	14:15:02	84.264
07/24/02	14:16:02	85.402
07/24/02	14:17:02	84.435
07/24/02	14:18:02	84.520
07/24/02	14:19:02	84.975
07/24/02	14:20:02	84.520
07/24/02	14:21:02	83.724
07/24/02	14:22:02	88.871
07/24/02	14:23:02	86.568
07/24/02	14:24:02	84.890
07/24/02	14:25:02	86.738
07/24/02	14:26:02	84.975
07/24/02	14:27:02	85.316
07/24/02	14:28:02	86.198
07/24/02	14:29:02	86.113
07/24/02	14:30:02	85.146
07/24/02	14:31:02	84.890
07/24/02	14:32:02	85.686
07/24/02	14:33:02	87.108
07/24/02	14:34:02	85.686
07/24/02	14:35:02	86.312
07/24/02	14:36:02	85.231
07/24/02	14:37:02	87.193
07/24/02	14:38:02	86.198
07/24/02	14:39:02	84.890
07/24/02	14:40:02	86.027
07/24/02	14:41:02	86.397
07/24/02	14:42:02	86.482
07/24/02	14:43:02	85.487
07/24/02	14:44:02	86.113
07/24/02	14:45:02	86.824
07/24/02	14:46:02	85.771
07/24/02	14:47:02	86.397
07/24/02	14:48:02	85.402
07/24/02	14:49:02	85.857
07/24/02	14:50:02	86.027
07/24/02	14:51:02	86.198
07/24/02	14:52:02	85.771
07/24/02	14:53:02	85.316
07/24/02	14:54:02	85.231
07/24/02	14:55:02	86.027
07/24/02	14:56:02	0.427
07/24/02	14:57:02	0.427
07/24/02	14:58:02	0.512
07/24/02	14:59:02	0.427
07/24/02	15:00:02	0.427
07/24/02	15:01:02	0.427
07/24/02	15:02:02	0.427
07/24/02	15:03:02	0.427
07/24/02	15:04:02	0.427
07/24/02	15:05:02	0.427
07/24/02	15:06:02	0.427
07/24/02	15:07:02	0.427
07/24/02	15:08:02	0.427
07/24/02	15:09:02	0.427
07/24/02	15:10:02	0.512
07/24/02	15:11:02	0.512
07/24/02	15:12:02	0.427
07/24/02	15:13:02	0.512
07/24/02	15:14:02	0.427
07/24/02	15:15:02	0.427
07/24/02	15:16:02	0.427
07/24/02	15:17:02	0.427
07/24/02	15:18:02	0.427
07/24/02	15:19:02	0.427
07/24/02	15:20:02	0.427
07/24/02	15:21:02	0.427
07/24/02	15:22:02	0.427
07/24/02	15:23:02	0.427
07/24/02	15:24:02	0.427
07/24/02	15:25:02	0.427
07/24/02	15:26:02	0.427
07/24/02	15:27:02	0.427
07/24/02	15:28:02	0.427
07/24/02	15:29:02	0.427

COFFEE AND POSEY - NO. 7484

Date	Time	Pres (PSI)
07/22/02	11:39:10	-0.569
07/22/02	11:40:10	-0.569
07/22/02	11:41:10	-0.569
07/22/02	11:42:10	-0.569
07/22/02	11:43:10	-0.626
07/22/02	11:44:10	-0.626
07/22/02	11:45:10	-0.626
07/22/02	11:46:10	-0.711
07/22/02	11:47:10	-0.711
07/22/02	11:48:10	93.535
07/22/02	11:49:10	96.692
07/22/02	11:50:10	100.787
07/22/02	11:51:10	103.233
07/22/02	11:52:10	107.612
07/22/02	11:53:10	111.451
07/22/02	11:54:10	111.366
07/22/02	11:55:10	109.262
07/22/02	11:56:10	103.631
07/22/02	11:57:10	98.739
07/22/02	11:58:10	96.692
07/22/02	11:59:10	94.189
07/22/02	12:00:10	97.915
07/22/02	12:01:10	102.152
07/22/02	12:02:10	98.995
07/22/02	12:03:10	99.564
07/22/02	12:04:10	105.167
07/22/02	12:05:10	106.475
07/22/02	12:06:10	108.835
07/22/02	12:07:10	104.512
07/22/02	12:08:10	99.792
07/22/02	12:09:10	97.772
07/22/02	12:10:10	92.881
07/22/02	12:11:10	92.881
07/22/02	12:12:10	96.123
07/22/02	12:13:10	99.308
07/22/02	12:14:10	99.792
07/22/02	12:15:10	103.546
07/22/02	12:16:10	103.887
07/22/02	12:17:10	104.939
07/22/02	12:18:10	102.721
07/22/02	12:19:10	101.100
07/22/02	12:20:10	98.000
07/22/02	12:21:10	87.335
07/22/02	12:22:10	90.748
07/22/02	12:23:10	91.317
07/22/02	12:24:10	95.896
07/22/02	12:25:10	95.327
07/22/02	12:26:10	99.877
07/22/02	12:27:10	98.825
07/22/02	12:28:10	104.939
07/22/02	12:29:10	107.129
07/22/02	12:30:10	109.575
07/22/02	12:31:10	107.129
07/22/02	12:32:10	98.739
07/22/02	12:33:10	96.550
07/22/02	12:34:10	94.189
07/22/02	12:35:10	91.658
07/22/02	12:36:10	96.379
07/22/02	12:37:10	99.877
07/22/02	12:38:10	104.029
07/22/02	12:39:10	106.247
07/22/02	12:40:10	105.735
07/22/02	12:41:10	109.973
07/22/02	12:42:10	106.077
07/22/02	12:43:10	99.792
07/22/02	12:44:10	95.554
07/22/02	12:45:10	93.450
07/22/02	12:46:10	93.279
07/22/02	12:47:10	96.123
07/22/02	12:48:10	97.033
07/22/02	12:49:10	99.564
07/22/02	12:50:10	100.133
07/22/02	12:51:10	104.512
07/22/02	12:52:10	105.821
07/22/02	12:53:10	103.147
07/22/02	12:54:10	97.517
07/22/02	12:55:10	93.109
07/22/02	12:56:10	93.109
07/22/02	12:57:10	94.189
07/22/02	12:58:10	100.702
07/22/02	12:59:10	95.896
07/22/02	13:00:10	100.872
07/22/02	13:01:10	103.887
07/22/02	13:02:10	103.062
07/22/02	13:03:10	103.631
07/22/02	13:04:10	104.370
07/22/02	13:05:10	94.331
07/22/02	13:06:10	92.227
07/22/02	13:07:10	81.790
07/22/02	13:08:10	81.050
07/22/02	13:09:10	82.757
07/22/02	13:10:10	84.236
07/22/02	13:11:10	86.681
07/22/02	13:12:10	88.871
07/22/02	13:13:10	87.734
07/22/02	13:14:10	94.417
07/22/02	13:15:10	94.189
07/22/02	13:16:10	94.900
07/22/02	13:17:10	97.687
07/22/02	13:18:10	96.379
07/22/02	13:19:10	98.483
07/22/02	13:20:10	99.962
07/22/02	13:21:10	102.067
07/22/02	13:22:10	98.085
07/22/02	13:23:10	95.156
07/22/02	13:24:10	97.346
07/22/02	13:25:10	102.010
07/22/02	13:26:10	106.560
07/22/02	13:27:10	108.266
07/22/02	13:28:10	104.114
07/22/02	13:29:10	100.360
07/22/02	13:30:10	96.208
07/22/02	13:31:10	91.971
07/22/02	13:32:10	90.919
07/22/02	13:33:10	96.777
07/22/02	13:34:10	98.825
07/22/02	13:35:10	97.602
07/22/02	13:36:10	98.569
07/22/02	13:37:10	99.052
07/22/02	13:38:10	105.167
07/22/02	13:39:10	108.693
07/22/02	13:40:10	107.385
07/22/02	13:41:10	96.208
07/22/02	13:42:10	96.777
07/22/02	13:43:10	92.540
07/22/02	13:44:10	89.611
07/22/02	13:45:10	96.464
07/22/02	13:46:10	90.833
07/22/02	13:47:10	102.408
07/22/02	13:48:10	96.550
07/22/02	13:49:10	100.048
07/22/02	13:50:10	101.270
07/22/02	13:51:10	104.370
07/22/02	13:52:10	108.124
07/22/02	13:53:10	103.233
07/22/02	13:54:10	98.483
07/22/02	13:55:10	94.104
07/22/02	13:56:10	92.227
07/22/02	13:57:10	93.677
07/22/02	13:58:10	96.862
07/22/02	13:59:10	94.587
07/22/02	14:00:10	105.024
07/22/02	14:01:10	101.270
07/22/02	14:02:10	108.039
07/22/02	14:03:10	107.129
07/22/02	14:04:10	105.081
07/22/02	14:05:10	99.479
07/22/02	14:06:10	94.815
07/22/02	14:07:10	92.312
07/22/02	14:08:10	88.786
07/22/02	14:09:10	92.625
07/22/02	14:10:10	96.948
07/22/02	14:11:10	94.019
07/22/02	14:12:10	99.479
07/22/02	14:13:10	97.602
07/22/02	14:14:10	102.408
07/22/02	14:15:10	101.498
07/22/02	14:16:10	106.389
07/22/02	14:17:10	102.891
07/22/02	14:18:10	99.564
07/22/02	14:19:10	97.431
07/22/02	14:20:10	90.521
07/22/02	14:21:10	91.487
07/22/02	14:22:10	93.620
07/22/02	14:23:10	94.417
07/22/02	14:24:10	96.464
07/22/02	14:25:10	102.891
07/22/02	14:26:10	104.683
07/22/02	14:27:10	104.370
07/22/02	14:28:10	107.783
07/22/02	14:29:10	107.698
07/22/02	14:30:10	103.375
07/22/02	14:31:10	97.829
07/22/02	14:32:10	93.933
07/22/02	14:33:10	93.023
07/22/02	14:34:10	95.469
07/22/02	14:35:10	98.910
07/22/02	14:36:10	92.227
07/22/02	14:37:10	103.062
07/22/02	14:38:10	104.598
07/22/02	14:39:10	102.408
07/22/02	14:40:10	107.612
07/22/02	14:41:10	106.247
07/22/02	14:42:10	99.564
07/22/02	14:43:10	96.464
07/22/02	14:44:10	91.658
07/22/02	14:45:10	89.781
07/22/02	14:46:10	92.966
07/22/02	14:47:10	94.815
07/22/02	14:48:10	102.493
07/22/02	14:49:10	104.200
07/22/02	14:50:10	105.024
07/22/02	14:51:10	105.593
07/22/02	14:52:10	107.954
07/22/02	14:53:10	109.489
07/22/02	14:54:10	98.995
07/22/02	14:55:10	96.635
07/22/02	14:56:10	91.317
07/22/02	14:57:10	94.417
07/22/02	14:58:10	98.427
07/22/02	14:59:10	98.256
07/22/02	15:00:10	96.123
07/22/02	15:01:10	101.754
07/22/02	15:02:10	102.237
07/22/02	15:03:10	104.029
07/22/02	15:04:10	107.470
07/22/02	15:05:10	107.129
07/22/02	15:06:10	97.687
07/22/02	15:07:10	92.966
07/22/02	15:08:10	91.089
07/22/02	15:09:10	97.118
07/22/02	15:10:10	101.441
07/22/02	15:11:10	104.512
07/22/02	15:12:10	107.385
07/22/02	15:13:10	110.058
07/22/02	15:14:10	109.489
07/22/02	15:15:10	103.887
07/22/02	15:16:10	98.256
07/22/02	15:17:10	97.261
07/22/02	15:18:10	88.388
07/22/02	15:19:10	93.194
07/22/02	15:20:10	96.379
07/22/02	15:21:10	100.872
07/22/02	15:22:10	95.810
07/22/02	15:23:10	100.133
07/22/02	15:24:10	98.910
07/22/02	15:25:10	103.631
07/22/02	15:26:10	104.939
07/22/02	15:27:10	105.167
07/22/02	15:28:10	103.062
07/22/02	15:29:10	95.640
07/22/02	15:30:10	92.540
07/22/02	15:31:10	94.246
07/22/02	15:32:10	94.019
07/22/02	15:33:10	97.346
07/22/02	15:34:10	102.977
07/22/02	15:35:10	102.891
07/22/02	15:36:10	104.456
07/22/02	15:37:10	106.304
07/22/02	15:38:10	109.916
07/22/02	15:39:10	110.883
07/22/02	15:40:10	104.200
07/22/02	15:41:10	100.133
07/22/02	15:42:10	95.554
07/22/02	15:43:10	94.019
07/22/02	15:44:10	96.294
07/22/02	15:45:10	100.872
07/22/02	15:46:10	102.664
07/22/02	15:47:10	105.252
07/22/02	15:48:10	107.129
07/22/02	15:49:10	108.522
07/22/02	15:50:10	112.020
07/22/02	15:51:10	100.275
07/22/02	15:52:10	100.133
07/22/02	15:53:10	98.654
07/22/02	15:54:10	92.796
07/22/02	15:55:10	95.241
07/22/02	15:56:10	100.531
07/22/02	15:57:10	99.138
07/22/02	15:58:10	100.616
07/22/02	15:59:10	102.977
07/22/02	16:00:10	106.077
07/22/02	16:01:10	108.437
07/22/02	16:02:10	103.062

COFFEE AND POSEY - NO. 7484 cont.

Date	Time	Pres (PSI)
07/22/02	16:03:10	101.185
07/22/02	16:04:10	96.692
07/22/02	16:05:10	93.535
07/22/02	16:06:10	95.469
07/22/02	16:07:10	99.792
07/22/02	16:08:10	102.010
07/22/02	16:09:10	107.043
07/22/02	16:10:10	105.678
07/22/02	16:11:10	107.470
07/22/02	16:12:10	102.152
07/22/02	16:13:10	101.270
07/22/02	16:14:10	96.692
07/22/02	16:15:10	94.985
07/22/02	16:16:10	92.056
07/22/02	16:17:10	94.985
07/22/02	16:18:10	98.654
07/22/02	16:19:10	103.290
07/22/02	16:20:10	104.114
07/22/02	16:21:10	105.081
07/22/02	16:22:10	108.039
07/22/02	16:23:10	105.906
07/22/02	16:24:10	99.649
07/22/02	16:25:10	94.417
07/22/02	16:26:10	94.673
07/22/02	16:27:10	92.142
07/22/02	16:28:10	97.915
07/22/02	16:29:10	100.218
07/22/02	16:30:10	102.891
07/22/02	16:31:10	103.062
07/22/02	16:32:10	107.385
07/22/02	16:33:10	109.575
07/22/02	16:34:10	105.252
07/22/02	16:35:10	100.218
07/22/02	16:36:10	98.825
07/22/02	16:37:10	95.156
07/22/02	16:38:10	95.554
07/22/02	16:39:10	99.223
07/22/02	16:40:10	102.721
07/22/02	16:41:10	104.029
07/22/02	16:42:10	105.821
07/22/02	16:43:10	109.575
07/22/02	16:44:10	109.091
07/22/02	16:45:10	103.716
07/22/02	16:46:10	99.877
07/22/02	16:47:10	97.431
07/22/02	16:48:10	95.810
07/22/02	16:49:10	96.464
07/22/02	16:50:10	98.256
07/22/02	16:51:10	99.564
07/22/02	16:52:10	101.100
07/22/02	16:53:10	103.944
07/22/02	16:54:10	108.693
07/22/02	16:55:10	107.612
07/22/02	16:56:10	103.944
07/22/02	16:57:10	100.275
07/22/02	16:58:10	95.412
07/22/02	16:59:10	91.573
07/22/02	17:00:10	92.796
07/22/02	17:01:10	95.241
07/22/02	17:02:10	96.862
07/22/02	17:03:10	98.825
07/22/02	17:04:10	100.360
07/22/02	17:05:10	102.323
07/22/02	17:06:10	103.631
07/22/02	17:07:10	104.768
07/22/02	17:08:10	103.801
07/22/02	17:09:10	98.256
07/22/02	17:10:10	95.241
07/22/02	17:11:10	94.758
07/22/02	17:12:10	95.554
07/22/02	17:13:10	98.256
07/22/02	17:14:10	101.014
07/22/02	17:15:10	103.062
07/22/02	17:16:10	105.024
07/22/02	17:17:10	106.731
07/22/02	17:18:10	106.645
07/22/02	17:19:10	102.237
07/22/02	17:20:10	98.569
07/22/02	17:21:10	96.692
07/22/02	17:22:10	93.194
07/22/02	17:23:10	93.933
07/22/02	17:24:10	96.208
07/22/02	17:25:10	96.379
07/22/02	17:26:10	99.308
07/22/02	17:27:10	104.456
07/22/02	17:28:10	106.560
07/22/02	17:29:10	105.735
07/22/02	17:30:10	101.014
07/22/02	17:31:10	98.000
07/22/02	17:32:10	93.763
07/22/02	17:33:10	92.966
07/22/02	17:34:10	93.023
07/22/02	17:35:10	93.023
07/22/02	17:36:10	92.796
07/22/02	17:37:10	99.393
07/22/02	17:38:10	103.631
07/22/02	17:39:10	103.887
07/22/02	17:40:10	104.939
07/22/02	17:41:10	99.052
07/22/02	17:42:10	92.142
07/22/02	17:43:10	91.175
07/22/02	17:44:10	87.506
07/22/02	17:45:10	93.535
07/22/02	17:46:10	96.208
07/22/02	17:47:10	96.123
07/22/02	17:48:10	98.739
07/22/02	17:49:10	100.275
07/22/02	17:50:10	103.546
07/22/02	17:51:10	104.029
07/22/02	17:52:10	100.133
07/22/02	17:53:10	99.393
07/22/02	17:54:10	95.725
07/22/02	17:55:10	90.748
07/22/02	17:56:10	92.796
07/22/02	17:57:10	95.981
07/22/02	17:58:10	99.479
07/22/02	17:59:10	102.010
07/22/02	18:00:10	105.593
07/22/02	18:01:10	108.266
07/22/02	18:02:10	101.925
07/22/02	18:03:10	94.189
07/22/02	18:04:10	90.009
07/22/02	18:05:10	90.009
07/22/02	18:06:10	89.781
07/22/02	18:07:10	92.227
07/22/02	18:08:10	95.071
07/22/02	18:09:10	95.156
07/22/02	18:10:10	98.910
07/22/02	18:11:10	104.200
07/22/02	18:12:10	103.944
07/22/02	18:13:10	99.052
07/22/02	18:14:10	93.763
07/22/02	18:15:10	89.525
07/22/02	18:16:10	85.373
07/22/02	18:17:10	86.767
07/22/02	18:18:10	91.487
07/22/02	18:19:10	95.241
07/22/02	18:20:10	99.223
07/22/02	18:21:10	103.147
07/22/02	18:22:10	104.370
07/22/02	18:23:10	104.200
07/22/02	18:24:10	100.048
07/22/02	18:25:10	96.379
07/22/02	18:26:10	89.127
07/22/02	18:27:10	85.544
07/22/02	18:28:10	86.198
07/22/02	18:29:10	83.837
07/22/02	18:30:10	86.767
07/22/02	18:31:10	90.748
07/22/02	18:32:10	97.772
07/22/02	18:33:10	98.000
07/22/02	18:34:10	97.915
07/22/02	18:35:10	95.896
07/22/02	18:36:10	93.763
07/22/02	18:37:10	92.881
07/22/02	18:38:10	88.786
07/22/02	18:39:10	87.734
07/22/02	18:40:10	92.312
07/22/02	18:41:10	93.279
07/22/02	18:42:10	94.189
07/22/02	18:43:10	95.725
07/22/02	18:44:10	96.948
07/22/02	18:45:10	102.664
07/22/02	18:46:10	100.929
07/22/02	18:47:10	97.261
07/22/02	18:48:10	93.364
07/22/02	18:49:10	90.606
07/22/02	18:50:10	87.421
07/22/02	18:51:10	89.952
07/22/02	18:52:10	91.004
07/22/02	18:53:10	96.777
07/22/02	18:54:10	100.702
07/22/02	18:55:10	102.010
07/22/02	18:56:10	107.868
07/22/02	18:57:10	101.583
07/22/02	18:58:10	96.123
07/22/02	18:59:10	90.009
07/22/02	19:00:10	87.904
07/22/02	19:01:10	87.335
07/22/02	19:02:10	84.236
07/22/02	19:03:10	86.113
07/22/02	19:04:10	90.265
07/22/02	19:05:10	94.815
07/22/02	19:06:10	96.464
07/22/02	19:07:10	99.308
07/22/02	19:08:10	100.531
07/22/02	19:09:10	96.208
07/22/02	19:10:10	91.573
07/22/02	19:11:10	86.852
07/22/02	19:12:10	81.619
07/22/02	19:13:10	79.913
07/22/02	19:14:10	84.492
07/22/02	19:15:10	89.212
07/22/02	19:16:10	93.933
07/22/02	19:17:10	93.677
07/22/02	19:18:10	97.517
07/22/02	19:19:10	99.564
07/22/02	19:20:10	104.768
07/22/02	19:21:10	103.062
07/22/02	19:22:10	96.635
07/22/02	19:23:10	89.611
07/22/02	19:24:10	87.421
07/22/02	19:25:10	88.473
07/22/02	19:26:10	89.525
07/22/02	19:27:10	92.796
07/22/02	19:28:10	92.056
07/22/02	19:29:10	97.118
07/22/02	19:30:10	99.649
07/22/02	19:31:10	104.114
07/22/02	19:32:10	98.825
07/22/02	19:33:10	91.089
07/22/02	19:34:10	91.573
07/22/02	19:35:10	87.734
07/22/02	19:36:10	90.350
07/22/02	19:37:10	92.881
07/22/02	19:38:10	93.450
07/22/02	19:39:10	96.692
07/22/02	19:40:10	101.669
07/22/02	19:41:10	103.631
07/22/02	19:42:10	106.816
07/22/02	19:43:10	101.014
07/22/02	19:44:10	97.033
07/22/02	19:45:10	95.241
07/22/02	19:46:10	91.089
07/22/02	19:47:10	91.658
07/22/02	19:48:10	93.535
07/22/02	19:49:10	96.038
07/22/02	19:50:10	95.981
07/22/02	19:51:10	100.360
07/22/02	19:52:10	100.446
07/22/02	19:53:10	97.204
07/22/02	19:54:10	89.696
07/22/02	19:55:10	86.283
07/22/02	19:56:10	85.771
07/22/02	19:57:10	87.421
07/22/02	19:58:10	84.150
07/22/02	19:59:10	89.611
07/22/02	20:00:10	90.350
07/22/02	20:01:10	94.502
07/22/02	20:02:10	100.531
07/22/02	20:03:10	102.408
07/22/02	20:04:10	100.218
07/22/02	20:05:10	94.815
07/22/02	20:06:10	95.327
07/22/02	20:07:10	93.194
07/22/02	20:08:10	89.042
07/22/02	20:09:10	94.019
07/22/02	20:10:10	99.564
07/22/02	20:11:10	99.792
07/22/02	20:12:10	100.929
07/22/02	20:13:10	101.669
07/22/02	20:14:10	97.772
07/22/02	20:15:10	93.933
07/22/02	20:16:10	89.298
07/22/02	20:17:10	90.265
07/22/02	20:18:10	92.796
07/22/02	20:19:10	95.241
07/22/02	20:20:10	97.687
07/22/02	20:21:10	102.977
07/22/02	20:22:10	104.768
07/22/02	20:23:10	106.247
07/22/02	20:24:10	101.839
07/22/02	20:25:10	101.185
07/22/02	20:26:10	95.469

COFFEE AND POSEY - NO. 7484 cont.

Date	Time	Pres (PSI)	Date	Time	Pres (PSI)	Date	Time	Pres (PSI)	Date	Time	Pres (PSI)
07/22/02	20:27:10	87.904	07/22/02	21:33:10	102.237	07/22/02	22:39:10	89.042	07/22/02	23:45:10	102.323
07/22/02	20:28:10	92.454	07/22/02	21:34:10	99.564	07/22/02	22:40:10	92.056	07/22/02	23:46:10	105.593
07/22/02	20:29:10	95.156	07/22/02	21:35:10	94.985	07/22/02	22:41:10	95.469	07/22/02	23:47:10	110.399
07/22/02	20:30:10	97.033	07/22/02	21:36:10	92.056	07/22/02	22:42:10	101.185	07/22/02	23:48:10	113.812
07/22/02	20:31:10	100.360	07/22/02	21:37:10	89.696	07/22/02	22:43:10	107.129	07/22/02	23:49:10	109.916
07/22/02	20:32:10	105.024	07/22/02	21:38:10	92.227	07/22/02	22:44:10	108.437	07/22/02	23:50:10	106.389
07/22/02	20:33:10	109.319	07/22/02	21:39:10	97.204	07/22/02	22:45:10	108.522	07/22/02	23:51:10	100.929
07/22/02	20:34:10	105.991	07/22/02	21:40:10	97.431	07/22/02	22:46:10	104.029	07/22/02	23:52:10	97.346
07/22/02	20:35:10	94.331	07/22/02	21:41:10	100.702	07/22/02	22:47:10	101.014	07/22/02	23:53:10	96.550
07/22/02	20:36:10	89.952	07/22/02	21:42:10	104.768	07/22/02	22:48:10	97.431	07/22/02	23:54:10	93.023
07/22/02	20:37:10	88.075	07/22/02	21:43:10	107.129	07/22/02	22:49:10	96.294	07/22/02	23:55:10	100.360
07/22/02	20:38:10	86.027	07/22/02	21:44:10	102.237	07/22/02	22:50:10	92.710	07/22/02	23:56:10	104.512
07/22/02	20:39:10	90.919	07/22/02	21:45:10	99.138	07/22/02	22:51:10	96.635	07/22/02	23:57:10	106.958
07/22/02	20:40:10	93.450	07/22/02	21:46:10	97.033	07/22/02	22:52:10	102.237	07/22/02	23:58:10	108.693
07/22/02	20:41:10	97.687	07/22/02	21:47:10	91.886	07/22/02	22:53:10	103.375	07/22/02	23:59:10	113.812
07/22/02	20:42:10	101.356	07/22/02	21:48:10	90.748	07/22/02	22:54:10	108.124	07/23/02	00:00:10	109.489
07/22/02	20:43:10	105.821	07/22/02	21:49:10	94.900	07/22/02	22:55:10	109.176	07/23/02	00:01:10	106.645
07/22/02	20:44:10	109.006	07/22/02	21:50:10	98.256	07/22/02	22:56:10	106.475	07/23/02	00:02:10	102.891
07/22/02	20:45:10	105.252	07/22/02	21:51:10	101.754	07/22/02	22:57:10	101.498	07/23/02	00:03:10	101.441
07/22/02	20:46:10	98.569	07/22/02	21:52:10	104.200	07/22/02	22:58:10	98.739	07/23/02	00:04:10	98.569
07/22/02	20:47:10	92.540	07/22/02	21:53:10	106.304	07/22/02	22:59:10	98.256	07/23/02	00:05:10	98.825
07/22/02	20:48:10	90.350	07/22/02	21:54:10	109.319	07/22/02	23:00:10	93.620	07/23/02	00:06:10	96.635
07/22/02	20:49:10	88.473	07/22/02	21:55:10	99.706	07/22/02	23:01:10	95.412	07/23/02	00:07:10	104.512
07/22/02	20:50:10	89.866	07/22/02	21:56:10	94.019	07/22/02	23:02:10	100.133	07/23/02	00:08:10	107.612
07/22/02	20:51:10	89.952	07/22/02	21:57:10	90.606	07/22/02	23:03:10	103.233	07/23/02	00:09:10	111.139
07/22/02	20:52:10	89.611	07/22/02	21:58:10	88.388	07/22/02	23:04:10	107.698	07/23/02	00:10:10	114.381
07/22/02	20:53:10	93.109	07/22/02	21:59:10	93.620	07/22/02	23:05:10	109.489	07/23/02	00:11:10	109.176
07/22/02	20:54:10	95.156	07/22/02	22:00:10	94.815	07/22/02	23:06:10	110.058	07/23/02	00:12:10	106.162
07/22/02	20:55:10	98.256	07/22/02	22:01:10	101.185	07/22/02	23:07:10	106.247	07/23/02	00:13:10	104.456
07/22/02	20:56:10	100.048	07/22/02	22:02:10	101.441	07/22/02	23:08:10	103.944	07/23/02	00:14:10	101.754
07/22/02	20:57:10	94.985	07/22/02	22:03:10	103.801	07/22/02	23:09:10	101.100	07/23/02	00:15:10	99.962
07/22/02	20:58:10	96.862	07/22/02	22:04:10	105.081	07/22/02	23:10:10	98.739	07/23/02	00:16:10	98.171
07/22/02	20:59:10	95.640	07/22/02	22:05:10	97.829	07/22/02	23:11:10	95.810	07/23/02	00:17:10	96.038
07/22/02	21:00:10	91.743	07/22/02	22:06:10	95.810	07/22/02	23:12:10	96.379	07/23/02	00:18:10	101.356
07/22/02	21:01:10	86.852	07/22/02	22:07:10	95.241	07/22/02	23:13:10	98.654	07/23/02	00:19:10	104.512
07/22/02	21:02:10	91.800	07/22/02	22:08:10	91.402	07/22/02	23:14:10	102.067	07/23/02	00:20:10	109.916
07/22/02	21:03:10	93.279	07/22/02	22:09:10	97.204	07/22/02	23:15:10	106.816	07/23/02	00:21:10	113.158
07/22/02	21:04:10	98.910	07/22/02	22:10:10	99.138	07/22/02	23:16:10	108.352	07/23/02	00:22:10	112.020
07/22/02	21:05:10	92.881	07/22/02	22:11:10	102.067	07/22/02	23:17:10	110.968	07/23/02	00:23:10	108.181
07/22/02	21:06:10	93.763	07/22/02	22:12:10	100.616	07/22/02	23:18:10	105.508	07/23/02	00:24:10	105.508
07/22/02	21:07:10	92.796	07/22/02	22:13:10	102.977	07/22/02	23:19:10	100.218	07/23/02	00:25:10	102.493
07/22/02	21:08:10	93.109	07/22/02	22:14:10	105.167	07/22/02	23:20:10	99.962	07/23/02	00:26:10	100.275
07/22/02	21:09:10	89.696	07/22/02	22:15:10	101.014	07/22/02	23:21:10	97.915	07/23/02	00:27:10	96.208
07/22/02	21:10:10	83.183	07/22/02	22:16:10	94.502	07/22/02	23:22:10	95.327	07/23/02	00:28:10	95.725
07/22/02	21:11:10	79.259	07/22/02	22:17:10	90.606	07/22/02	23:23:10	95.156	07/23/02	00:29:10	99.649
07/22/02	21:12:10	77.894	07/22/02	22:18:10	87.250	07/22/02	23:24:10	102.579	07/23/02	00:30:10	104.285
07/22/02	21:13:10	80.482	07/22/02	22:19:10	89.952	07/22/02	23:25:10	107.043	07/23/02	00:31:10	108.522
07/22/02	21:14:10	79.344	07/22/02	22:20:10	92.881	07/22/02	23:26:10	110.485	07/23/02	00:32:10	113.641
07/22/02	21:15:10	82.927	07/22/02	22:21:10	93.677	07/22/02	23:27:10	111.451	07/23/02	00:33:10	112.930
07/22/02	21:16:10	87.335	07/22/02	22:22:10	95.469	07/22/02	23:28:10	108.437	07/23/02	00:34:10	108.181
07/22/02	21:17:10	86.681	07/22/02	22:23:10	97.915	07/22/02	23:29:10	104.768	07/23/02	00:35:10	107.527
07/22/02	21:18:10	90.663	07/22/02	22:24:10	101.270	07/22/02	23:30:10	102.664	07/23/02	00:36:10	104.200
07/22/02	21:19:10	94.331	07/22/02	22:25:10	103.460	07/22/02	23:31:10	100.531	07/23/02	00:37:10	102.977
07/22/02	21:20:10	97.204	07/22/02	22:26:10	99.223	07/22/02	23:32:10	96.692	07/23/02	00:38:10	99.223
07/22/02	21:21:10	100.218	07/22/02	22:27:10	94.900	07/22/02	23:33:10	93.279	07/23/02	00:39:10	97.602
07/22/02	21:22:10	98.000	07/22/02	22:28:10	94.104	07/22/02	23:34:10	98.256	07/23/02	00:40:10	96.777
07/22/02	21:23:10	93.023	07/22/02	22:29:10	87.421	07/22/02	23:35:10	103.375	07/23/02	00:41:10	100.702
07/22/02	21:24:10	91.004	07/22/02	22:30:10	94.502	07/22/02	23:36:10	108.608	07/23/02	00:42:10	105.821
07/22/02	21:25:10	88.388	07/22/02	22:31:10	98.654	07/22/02	23:37:10	113.158	07/23/02	00:43:10	111.139
07/22/02	21:26:10	91.971	07/22/02	22:32:10	102.664	07/22/02	23:38:10	111.139	07/23/02	00:44:10	114.381
07/22/02	21:27:10	91.402	07/22/02	22:33:10	108.437	07/22/02	23:39:10	107.783	07/23/02	00:45:10	112.276
07/22/02	21:28:10	95.412	07/22/02	22:34:10	106.560	07/22/02	23:40:10	105.167	07/23/02	00:46:10	109.404
07/22/02	21:29:10	97.118	07/22/02	22:35:10	104.854	07/22/02	23:41:10	100.787	07/23/02	00:47:10	107.129
07/22/02	21:30:10	100.048	07/22/02	22:36:10	101.185	07/22/02	23:42:10	95.469	07/23/02	00:48:10	104.854
07/22/02	21:31:10	102.977	07/22/02	22:37:10	96.635	07/22/02	23:43:10	94.189	07/23/02	00:49:10	101.669
07/22/02	21:32:10	105.337	07/22/02	22:38:10	95.554	07/22/02	23:44:10	97.033	07/23/02	00:50:10	99.962

COFFEE AND POSEY - NO. 7484 cont.

Date	Time	Pres (PSI)
07/23/02	00:51:10	98.427
07/23/02	00:52:10	96.464
07/23/02	00:53:10	100.360
07/23/02	00:54:10	104.683
07/23/02	00:55:10	108.693
07/23/02	00:56:10	114.722
07/23/02	00:57:10	113.328
07/23/02	00:58:10	108.835
07/23/02	00:59:10	106.475
07/23/02	01:00:10	105.081
07/23/02	01:01:10	100.787
07/23/02	01:02:10	100.360
07/23/02	01:03:10	98.739
07/23/02	01:04:10	96.123
07/23/02	01:05:10	99.706
07/23/02	01:06:10	103.147
07/23/02	01:07:10	106.901
07/23/02	01:08:10	109.745
07/23/02	01:09:10	111.451
07/23/02	01:10:10	107.783
07/23/02	01:11:10	105.422
07/23/02	01:12:10	101.754
07/23/02	01:13:10	99.962
07/23/02	01:14:10	96.862
07/23/02	01:15:10	95.896
07/23/02	01:16:10	100.702
07/23/02	01:17:10	105.167
07/23/02	01:18:10	108.352
07/23/02	01:19:10	113.158
07/23/02	01:20:10	112.589
07/23/02	01:21:10	107.698
07/23/02	01:22:10	105.337
07/23/02	01:23:10	102.067
07/23/02	01:24:10	99.962
07/23/02	01:25:10	98.427
07/23/02	01:26:10	97.261
07/23/02	01:27:10	103.716
07/23/02	01:28:10	106.304
07/23/02	01:29:10	112.106
07/23/02	01:30:10	114.637
07/23/02	01:31:10	111.366
07/23/02	01:32:10	108.750
07/23/02	01:33:10	106.247
07/23/02	01:34:10	102.579
07/23/02	01:35:10	102.067
07/23/02	01:36:10	99.564
07/23/02	01:37:10	96.038
07/23/02	01:38:10	98.825
07/23/02	01:39:10	103.944
07/23/02	01:40:10	108.437
07/23/02	01:41:10	112.760
07/23/02	01:42:10	114.210
07/23/02	01:43:10	111.139
07/23/02	01:44:10	107.214
07/23/02	01:45:10	106.077
07/23/02	01:46:10	102.408
07/23/02	01:47:10	101.839
07/23/02	01:48:10	100.048
07/23/02	01:49:10	98.739
07/23/02	01:50:10	98.000
07/23/02	01:51:10	105.024
07/23/02	01:52:10	109.319
07/23/02	01:53:10	113.812
07/23/02	01:54:10	114.864
07/23/02	01:55:10	111.139
07/23/02	01:56:10	108.750

Date	Time	Pres (PSI)
07/23/02	01:57:10	105.678
07/23/02	01:58:10	104.114
07/23/02	01:59:10	101.925
07/23/02	02:00:10	99.479
07/23/02	02:01:10	98.483
07/23/02	02:02:10	96.550
07/23/02	02:03:10	102.977
07/23/02	02:04:10	108.437
07/23/02	02:05:10	112.987
07/23/02	02:06:10	115.291
07/23/02	02:07:10	111.764
07/23/02	02:08:10	108.522
07/23/02	02:09:10	105.821
07/23/02	02:10:10	103.801
07/23/02	02:11:10	101.583
07/23/02	02:12:10	99.706
07/23/02	02:13:10	98.341
07/23/02	02:14:10	97.829
07/23/02	02:15:10	103.062
07/23/02	02:16:10	108.437
07/23/02	02:17:10	112.987
07/23/02	02:18:10	113.641
07/23/02	02:19:10	111.366
07/23/02	02:20:10	108.608
07/23/02	02:21:10	104.939
07/23/02	02:22:10	103.801
07/23/02	02:23:10	101.754
07/23/02	02:24:10	100.446
07/23/02	02:25:10	98.427
07/23/02	02:26:10	97.602
07/23/02	02:27:10	101.839
07/23/02	02:28:10	107.470
07/23/02	02:29:10	111.622
07/23/02	02:30:10	115.120
07/23/02	02:31:10	112.106
07/23/02	02:32:10	108.437
07/23/02	02:33:10	105.821
07/23/02	02:34:10	103.062
07/23/02	02:35:10	99.393
07/23/02	02:36:10	99.138
07/23/02	02:37:10	96.777
07/23/02	02:38:10	98.569
07/23/02	02:39:10	104.854
07/23/02	02:40:10	108.266
07/23/02	02:41:10	112.106
07/23/02	02:42:10	114.068
07/23/02	02:43:10	109.176
07/23/02	02:44:10	107.043
07/23/02	02:45:10	103.887
07/23/02	02:46:10	101.925
07/23/02	02:47:10	99.792
07/23/02	02:48:10	97.431
07/23/02	02:49:10	98.341
07/23/02	02:50:10	103.887
07/23/02	02:51:10	108.352
07/23/02	02:52:10	112.191
07/23/02	02:53:10	114.722
07/23/02	02:54:10	110.485
07/23/02	02:55:10	106.816
07/23/02	02:56:10	104.512
07/23/02	02:57:10	101.925
07/23/02	02:58:10	99.393
07/23/02	02:59:10	98.256
07/23/02	03:00:10	96.692
07/23/02	03:01:10	103.233

Date	Time	Pres (PSI)
07/23/02	03:02:10	107.299
07/23/02	03:03:10	112.504
07/23/02	03:04:10	116.087
07/23/02	03:05:10	111.366
07/23/02	03:06:10	109.319
07/23/02	03:07:10	106.162
07/23/02	03:08:10	104.029
07/23/02	03:09:10	102.010
07/23/02	03:10:10	100.133
07/23/02	03:11:10	98.825
07/23/02	03:12:10	98.483
07/23/02	03:13:10	103.801
07/23/02	03:14:10	108.750
07/23/02	03:15:10	112.106
07/23/02	03:16:10	115.689
07/23/02	03:17:10	109.830
07/23/02	03:18:10	107.385
07/23/02	03:19:10	106.162
07/23/02	03:20:10	103.062
07/23/02	03:21:10	101.014
07/23/02	03:22:10	99.877
07/23/02	03:23:10	98.341
07/23/02	03:24:10	98.739
07/23/02	03:25:10	106.247
07/23/02	03:26:10	110.058
07/23/02	03:27:10	114.637
07/23/02	03:28:10	114.637
07/23/02	03:29:10	110.627
07/23/02	03:30:10	108.039
07/23/02	03:31:10	105.024
07/23/02	03:32:10	103.631
07/23/02	03:33:10	101.356
07/23/02	03:34:10	100.275
07/23/02	03:35:10	97.118
07/23/02	03:36:10	100.048
07/23/02	03:37:10	105.422
07/23/02	03:38:10	110.399
07/23/02	03:39:10	113.073
07/23/02	03:40:10	114.381
07/23/02	03:41:10	109.830
07/23/02	03:42:10	107.043
07/23/02	03:43:10	103.631
07/23/02	03:44:10	101.925
07/23/02	03:45:10	99.706
07/23/02	03:46:10	98.739
07/23/02	03:47:10	96.123
07/23/02	03:48:10	102.010
07/23/02	03:49:10	107.612
07/23/02	03:50:10	111.707
07/23/02	03:51:10	114.466
07/23/02	03:52:10	109.973
07/23/02	03:53:10	108.181
07/23/02	03:54:10	104.768
07/23/02	03:55:10	102.579
07/23/02	03:56:10	100.702
07/23/02	03:57:10	99.223
07/23/02	03:58:10	97.033
07/23/02	03:59:10	98.995
07/23/02	04:00:10	104.200
07/23/02	04:01:10	107.954
07/23/02	04:02:10	111.622
07/23/02	04:03:10	113.897
07/23/02	04:04:10	108.750
07/23/02	04:05:10	108.693
07/23/02	04:06:10	103.546
07/23/02	04:07:10	101.669

Date	Time	Pres (PSI)
07/23/02	04:08:10	99.138
07/23/02	04:09:10	97.431
07/23/02	04:10:10	97.915
07/23/02	04:11:10	102.010
07/23/02	04:12:10	106.560
07/23/02	04:13:10	108.750
07/23/02	04:14:10	114.949
07/23/02	04:15:10	109.575
07/23/02	04:16:10	105.991
07/23/02	04:17:10	102.579
07/23/02	04:18:10	100.531
07/23/02	04:19:10	98.341
07/23/02	04:20:10	95.640
07/23/02	04:21:10	99.223
07/23/02	04:22:10	103.801
07/23/02	04:23:10	106.077
07/23/02	04:24:10	111.707
07/23/02	04:25:10	113.158
07/23/02	04:26:10	108.835
07/23/02	04:27:10	107.299
07/23/02	04:28:10	103.887
07/23/02	04:29:10	101.583
07/23/02	04:30:10	100.929
07/23/02	04:31:10	98.569
07/23/02	04:32:10	97.261
07/23/02	04:33:10	102.152
07/23/02	04:34:10	107.527
07/23/02	04:35:10	111.764
07/23/02	04:36:10	116.343
07/23/02	04:37:10	111.139
07/23/02	04:38:10	108.750
07/23/02	04:39:10	106.560
07/23/02	04:40:10	104.285
07/23/02	04:41:10	101.925
07/23/02	04:42:10	98.085
07/23/02	04:43:10	98.569
07/23/02	04:44:10	96.379
07/23/02	04:45:10	103.944
07/23/02	04:46:10	108.124
07/23/02	04:47:10	112.333
07/23/02	04:48:10	115.518
07/23/02	04:49:10	111.451
07/23/02	04:50:10	108.835
07/23/02	04:51:10	106.077
07/23/02	04:52:10	103.460
07/23/02	04:53:10	101.185
07/23/02	04:54:10	99.052
07/23/02	04:55:10	95.810
07/23/02	04:56:10	100.360
07/23/02	04:57:10	105.906
07/23/02	04:58:10	108.835
07/23/02	04:59:10	111.196
07/23/02	05:00:10	111.053
07/23/02	05:01:10	107.299
07/23/02	05:02:10	104.370
07/23/02	05:03:10	100.360
07/23/02	05:04:10	99.792
07/23/02	05:05:10	94.587
07/23/02	05:06:10	98.995
07/23/02	05:07:10	102.067
07/23/02	05:08:10	105.508
07/23/02	05:09:10	107.868
07/23/02	05:10:10	111.139
07/23/02	05:11:10	111.622
07/23/02	05:12:10	106.645
07/23/02	05:13:10	102.806

COFFEE AND POSEY - NO. 7484 cont.

Date	Time	Pres (PSI)
07/23/02	05:14:10	96.635
07/23/02	05:15:10	96.948
07/23/02	05:16:10	95.412
07/23/02	05:17:10	99.877
07/23/02	05:18:10	102.721
07/23/02	05:19:10	105.735
07/23/02	05:20:10	110.712
07/23/02	05:21:10	112.589
07/23/02	05:22:10	106.958
07/23/02	05:23:10	104.029
07/23/02	05:24:10	100.275
07/23/02	05:25:10	97.517
07/23/02	05:26:10	94.815
07/23/02	05:27:10	98.000
07/23/02	05:28:10	103.062
07/23/02	05:29:10	102.891
07/23/02	05:30:10	106.645
07/23/02	05:31:10	108.266
07/23/02	05:32:10	109.006
07/23/02	05:33:10	103.233
07/23/02	05:34:10	98.910
07/23/02	05:35:10	93.023
07/23/02	05:36:10	91.800
07/23/02	05:37:10	94.900
07/23/02	05:38:10	99.052
07/23/02	05:39:10	101.356
07/23/02	05:40:10	105.593
07/23/02	05:41:10	108.693
07/23/02	05:42:10	110.058
07/23/02	05:43:10	108.608
07/23/02	05:44:10	102.977
07/23/02	05:45:10	97.261
07/23/02	05:46:10	92.796
07/23/02	05:47:10	93.194
07/23/02	05:48:10	98.910
07/23/02	05:49:10	100.616
07/23/02	05:50:10	103.546
07/23/02	05:51:10	107.214
07/23/02	05:52:10	106.901
07/23/02	05:53:10	110.229
07/23/02	05:54:10	107.868
07/23/02	05:55:10	103.944
07/23/02	05:56:10	96.692
07/23/02	05:57:10	96.123
07/23/02	05:58:10	93.279
07/23/02	05:59:10	99.479
07/23/02	06:00:10	100.787
07/23/02	06:01:10	103.546
07/23/02	06:02:10	105.735
07/23/02	06:03:10	108.750
07/23/02	06:04:10	108.352
07/23/02	06:05:10	102.493
07/23/02	06:06:10	99.564
07/23/02	06:07:10	95.640
07/23/02	06:08:10	92.796
07/23/02	06:09:10	96.635
07/23/02	06:10:10	98.427
07/23/02	06:11:10	102.152
07/23/02	06:12:10	103.801
07/23/02	06:13:10	105.735
07/23/02	06:14:10	110.797
07/23/02	06:15:10	109.006
07/23/02	06:16:10	104.029
07/23/02	06:17:10	99.138
07/23/02	06:18:10	96.208
07/23/02	06:19:10	92.056
07/23/02	06:20:10	95.981
07/23/02	06:21:10	97.829
07/23/02	06:22:10	100.360
07/23/02	06:23:10	103.887
07/23/02	06:24:10	106.475
07/23/02	06:25:10	105.081
07/23/02	06:26:10	107.612
07/23/02	06:27:10	106.731
07/23/02	06:28:10	99.052
07/23/02	06:29:10	96.777
07/23/02	06:30:10	92.227
07/23/02	06:31:10	92.312
07/23/02	06:32:10	90.748
07/23/02	06:33:10	92.796
07/23/02	06:34:10	95.810
07/23/02	06:35:10	99.792
07/23/02	06:36:10	98.256
07/23/02	06:37:10	100.702
07/23/02	06:38:10	102.806
07/23/02	06:39:10	104.854
07/23/02	06:40:10	103.062
07/23/02	06:41:10	103.716
07/23/02	06:42:10	99.962
07/23/02	06:43:10	95.071
07/23/02	06:44:10	94.019
07/23/02	06:45:10	87.648
07/23/02	06:46:10	93.450
07/23/02	06:47:10	98.995
07/23/02	06:48:10	102.067
07/23/02	06:49:10	104.854
07/23/02	06:50:10	108.522
07/23/02	06:51:10	108.266
07/23/02	06:52:10	101.100
07/23/02	06:53:10	94.331
07/23/02	06:54:10	92.881
07/23/02	06:55:10	89.952
07/23/02	06:56:10	89.525
07/23/02	06:57:10	95.640
07/23/02	06:58:10	99.138
07/23/02	06:59:10	102.579
07/23/02	07:00:10	103.801
07/23/02	07:01:10	103.944
07/23/02	07:02:10	104.512
07/23/02	07:03:10	97.204
07/23/02	07:04:10	94.673
07/23/02	07:05:10	91.658
07/23/02	07:06:10	90.179
07/23/02	07:07:10	91.317
07/23/02	07:08:10	95.327
07/23/02	07:09:10	99.649
07/23/02	07:10:10	100.360
07/23/02	07:11:10	103.375
07/23/02	07:12:10	105.735
07/23/02	07:13:10	110.485
07/23/02	07:14:10	105.678
07/23/02	07:15:10	102.977
07/23/02	07:16:10	98.739
07/23/02	07:17:10	94.587
07/23/02	07:18:10	91.175
07/23/02	07:19:10	95.810
07/23/02	07:20:10	97.915
07/23/02	07:21:10	100.531
07/23/02	07:22:10	102.977
07/23/02	07:23:10	105.906
07/23/02	07:24:10	106.475
07/23/02	07:25:10	104.370
07/23/02	07:26:10	100.218
07/23/02	07:27:10	95.156
07/23/02	07:28:10	92.398
07/23/02	07:29:10	90.663
07/23/02	07:30:10	94.985
07/23/02	07:31:10	95.640
07/23/02	07:32:10	101.669
07/23/02	07:33:10	103.944
07/23/02	07:34:10	108.835
07/23/02	07:35:10	108.920
07/23/02	07:36:10	104.114
07/23/02	07:37:10	101.014
07/23/02	07:38:10	95.241
07/23/02	07:39:10	93.450
07/23/02	07:40:10	92.540
07/23/02	07:41:10	95.412
07/23/02	07:42:10	96.123
07/23/02	07:43:10	97.829
07/23/02	07:44:10	101.270
07/23/02	07:45:10	102.664
07/23/02	07:46:10	106.162
07/23/02	07:47:10	108.266
07/23/02	07:48:10	104.114
07/23/02	07:49:10	101.925
07/23/02	07:50:10	97.772
07/23/02	07:51:10	96.294
07/23/02	07:52:10	95.071
07/23/02	07:53:10	94.758
07/23/02	07:54:10	100.133
07/23/02	07:55:10	104.598
07/23/02	07:56:10	106.304
07/23/02	07:57:10	109.091
07/23/02	07:58:10	104.370
07/23/02	07:59:10	100.787
07/23/02	08:00:10	98.910
07/23/02	08:01:10	93.848
07/23/02	08:02:10	92.796
07/23/02	08:03:10	94.985
07/23/02	08:04:10	99.706
07/23/02	08:05:10	102.408
07/23/02	08:06:10	103.460
07/23/02	08:07:10	107.868
07/23/02	08:08:10	106.958
07/23/02	08:09:10	101.754
07/23/02	08:10:10	96.379
07/23/02	08:11:10	95.241
07/23/02	08:12:10	94.815
07/23/02	08:13:10	94.815
07/23/02	08:14:10	103.147
07/23/02	08:15:10	106.304
07/23/02	08:16:10	108.835
07/23/02	08:17:10	112.418
07/23/02	08:18:10	107.385
07/23/02	08:19:10	105.991
07/23/02	08:20:10	100.787
07/23/02	08:21:10	100.048
07/23/02	08:22:10	96.948
07/23/02	08:23:10	96.692
07/23/02	08:24:10	99.792
07/23/02	08:25:10	103.290
07/23/02	08:26:10	105.422
07/23/02	08:27:10	110.712
07/23/02	08:28:10	107.214
07/23/02	08:29:10	108.835
07/23/02	08:30:10	103.546
07/23/02	08:31:10	100.787
07/23/02	08:32:10	97.204
07/23/02	08:33:10	92.796
07/23/02	08:34:10	91.317
07/23/02	08:35:10	97.829
07/23/02	08:36:10	101.100
07/23/02	08:37:10	101.754
07/23/02	08:38:10	105.024
07/23/02	08:39:10	108.693
07/23/02	08:40:10	108.750
07/23/02	08:41:10	102.721
07/23/02	08:42:10	98.825
07/23/02	08:43:10	95.327
07/23/02	08:44:10	93.279
07/23/02	08:45:10	96.635
07/23/02	08:46:10	99.706
07/23/02	08:47:10	97.431
07/23/02	08:48:10	100.787
07/23/02	08:49:10	103.062
07/23/02	08:50:10	102.664
07/23/02	08:51:10	101.583
07/23/02	08:52:10	104.029
07/23/02	08:53:10	105.508
07/23/02	08:54:10	99.479
07/23/02	08:55:10	94.331
07/23/02	08:56:10	88.558
07/23/02	08:57:10	87.819
07/23/02	08:58:10	91.800
07/23/02	08:59:10	97.772
07/23/02	09:00:10	101.754
07/23/02	09:01:10	103.631
07/23/02	09:02:10	103.546
07/23/02	09:03:10	104.598
07/23/02	09:04:10	107.868
07/23/02	09:05:10	104.285
07/23/02	09:06:10	101.356
07/23/02	09:07:10	98.000
07/23/02	09:08:10	94.502
07/23/02	09:09:10	93.763
07/23/02	09:10:10	98.000
07/23/02	09:11:10	100.048
07/23/02	09:12:10	104.939
07/23/02	09:13:10	105.508
07/23/02	09:14:10	107.299
07/23/02	09:15:10	104.683
07/23/02	09:16:10	102.152
07/23/02	09:17:10	98.341
07/23/02	09:18:10	96.862
07/23/02	09:19:10	93.279
07/23/02	09:20:10	100.048
07/23/02	09:21:10	100.787
07/23/02	09:22:10	104.456
07/23/02	09:23:10	104.456
07/23/02	09:24:10	98.085
07/23/02	09:25:10	105.906
07/23/02	09:26:10	110.797
07/23/02	09:27:10	108.124
07/23/02	09:28:10	102.579
07/23/02	09:29:10	98.000
07/23/02	09:30:10	91.317
07/23/02	09:31:10	91.089
07/23/02	09:32:10	93.450
07/23/02	09:33:10	96.208
07/23/02	09:34:10	99.792
07/23/02	09:35:10	100.133
07/23/02	09:36:10	98.910
07/23/02	09:37:10	100.133

COFFEE AND POSEY - NO. 7484 cont.

Date	Time	Pres (PSI)
07/23/02	09:38:10	102.721
07/23/02	09:39:10	104.939
07/23/02	09:40:10	102.493
07/23/02	09:41:10	104.029
07/23/02	09:42:10	108.693
07/23/02	09:43:10	107.299
07/23/02	09:44:10	106.560
07/23/02	09:45:10	100.360
07/23/02	09:46:10	98.000
07/23/02	09:47:10	95.071
07/23/02	09:48:10	94.189
07/23/02	09:49:10	98.341
07/23/02	09:50:10	101.669
07/23/02	09:51:10	102.237
07/23/02	09:52:10	101.583
07/23/02	09:53:10	105.593
07/23/02	09:54:10	104.512
07/23/02	09:55:10	107.698
07/23/02	09:56:10	104.854
07/23/02	09:57:10	101.583
07/23/02	09:58:10	98.739
07/23/02	09:59:10	94.104
07/23/02	10:00:10	95.156
07/23/02	10:01:10	99.052
07/23/02	10:02:10	102.067
07/23/02	10:03:10	106.560
07/23/02	10:04:10	107.612
07/23/02	10:05:10	111.622
07/23/02	10:06:10	103.546
07/23/02	10:07:10	99.649
07/23/02	10:08:10	91.232
07/23/02	10:09:10	89.212
07/23/02	10:10:10	92.454
07/23/02	10:11:10	93.848
07/23/02	10:12:10	96.692
07/23/02	10:13:10	97.204
07/23/02	10:14:10	102.010
07/23/02	10:15:10	103.290
07/23/02	10:16:10	101.100
07/23/02	10:17:10	104.854
07/23/02	10:18:10	106.560
07/23/02	10:19:10	104.598
07/23/02	10:20:10	97.204
07/23/02	10:21:10	90.179
07/23/02	10:22:10	89.440
07/23/02	10:23:10	89.383
07/23/02	10:24:10	93.763
07/23/02	10:25:10	95.156
07/23/02	10:26:10	96.692
07/23/02	10:27:10	100.360
07/23/02	10:28:10	104.029
07/23/02	10:29:10	105.252
07/23/02	10:30:10	106.958
07/23/02	10:31:10	112.418
07/23/02	10:32:10	112.589
07/23/02	10:33:10	102.493
07/23/02	10:34:10	102.664
07/23/02	10:35:10	100.360
07/23/02	10:36:10	96.038
07/23/02	10:37:10	94.900
07/23/02	10:38:10	96.038
07/23/02	10:39:10	100.275
07/23/02	10:40:10	102.977
07/23/02	10:41:10	107.129
07/23/02	10:42:10	109.404
07/23/02	10:43:10	110.627
07/23/02	10:44:10	103.801
07/23/02	10:45:10	97.772
07/23/02	10:46:10	95.554
07/23/02	10:47:10	92.881
07/23/02	10:48:10	95.554
07/23/02	10:49:10	96.635
07/23/02	10:50:10	100.360
07/23/02	10:51:10	104.285
07/23/02	10:52:10	106.560
07/23/02	10:53:10	105.991
07/23/02	10:54:10	104.456
07/23/02	10:55:10	101.441
07/23/02	10:56:10	95.725
07/23/02	10:57:10	94.019
07/23/02	10:58:10	91.089
07/23/02	10:59:10	95.156
07/23/02	11:00:10	100.048
07/23/02	11:01:10	100.616
07/23/02	11:02:10	103.801
07/23/02	11:03:10	109.489
07/23/02	11:04:10	109.262
07/23/02	11:05:10	105.024
07/23/02	11:06:10	100.702
07/23/02	11:07:10	98.483
07/23/02	11:08:10	95.412
07/23/02	11:09:10	91.800
07/23/02	11:10:10	94.587
07/23/02	11:11:10	100.048
07/23/02	11:12:10	102.408
07/23/02	11:13:10	105.906
07/23/02	11:14:10	108.750
07/23/02	11:15:10	110.712
07/23/02	11:16:10	106.389
07/23/02	11:17:10	100.702
07/23/02	11:18:10	99.223
07/23/02	11:19:10	94.587
07/23/02	11:20:10	93.535
07/23/02	11:21:10	96.379
07/23/02	11:22:10	102.721
07/23/02	11:23:10	103.375
07/23/02	11:24:10	109.262
07/23/02	11:25:10	111.196
07/23/02	11:26:10	107.783
07/23/02	11:27:10	103.460
07/23/02	11:28:10	98.171
07/23/02	11:29:10	98.000
07/23/02	11:30:10	95.810
07/23/02	11:31:10	98.427
07/23/02	11:32:10	104.200
07/23/02	11:33:10	106.958
07/23/02	11:34:10	110.314
07/23/02	11:35:10	114.466
07/23/02	11:36:10	110.712
07/23/02	11:37:10	105.337
07/23/02	11:38:10	102.237
07/23/02	11:39:10	97.431
07/23/02	11:40:10	94.246
07/23/02	11:41:10	96.208
07/23/02	11:42:10	100.275
07/23/02	11:43:10	103.716
07/23/02	11:44:10	103.546
07/23/02	11:45:10	107.612
07/23/02	11:46:10	109.660
07/23/02	11:47:10	105.906
07/23/02	11:48:10	100.275
07/23/02	11:49:10	96.635
07/23/02	11:50:10	94.417
07/23/02	11:51:10	92.398
07/23/02	11:52:10	97.118
07/23/02	11:53:10	100.446
07/23/02	11:54:10	102.721
07/23/02	11:55:10	104.854
07/23/02	11:56:10	108.835
07/23/02	11:57:10	110.541
07/23/02	11:58:10	107.043
07/23/02	11:59:10	103.546
07/23/02	12:00:10	98.910
07/23/02	12:01:10	93.848
07/23/02	12:02:10	93.109
07/23/02	12:03:10	95.412
07/23/02	12:04:10	100.702
07/23/02	12:05:10	104.029
07/23/02	12:06:10	106.901
07/23/02	12:07:10	107.299
07/23/02	12:08:10	110.797
07/23/02	12:09:10	105.735
07/23/02	12:10:10	102.010
07/23/02	12:11:10	98.171
07/23/02	12:12:10	94.331
07/23/02	12:13:10	93.535
07/23/02	12:14:10	98.427
07/23/02	12:15:10	101.441
07/23/02	12:16:10	102.664
07/23/02	12:17:10	105.991
07/23/02	12:18:10	108.920
07/23/02	12:19:10	108.039
07/23/02	12:20:10	107.214
07/23/02	12:21:10	102.721
07/23/02	12:22:10	97.118
07/23/02	12:23:10	87.990
07/23/02	12:24:10	93.933
07/23/02	12:25:10	98.427
07/23/02	12:26:10	100.929
07/23/02	12:27:10	105.337
07/23/02	12:28:10	106.247
07/23/02	12:29:10	109.575
07/23/02	12:30:10	109.176
07/23/02	12:31:10	103.290
07/23/02	12:32:10	102.579
07/23/02	12:33:10	88.558
07/23/02	12:34:10	96.294
07/23/02	12:35:10	96.777
07/23/02	12:36:10	100.218
07/23/02	12:37:10	102.237
07/23/02	12:38:10	105.593
07/23/02	12:39:10	109.404
07/23/02	12:40:10	110.883
07/23/02	12:41:10	107.214
07/23/02	12:42:10	101.754
07/23/02	12:43:10	100.702
07/23/02	12:44:10	96.550
07/23/02	12:45:10	93.677
07/23/02	12:46:10	96.379
07/23/02	12:47:10	101.356
07/23/02	12:48:10	105.081
07/23/02	12:49:10	110.058
07/23/02	12:50:10	111.622
07/23/02	12:51:10	108.608
07/23/02	12:52:10	104.456
07/23/02	12:53:10	104.512
07/23/02	12:54:10	98.995
07/23/02	12:55:10	96.777
07/23/02	12:56:10	94.673
07/23/02	12:57:10	98.000
07/23/02	12:58:10	103.460
07/23/02	12:59:10	106.901
07/23/02	13:00:10	107.954
07/23/02	13:01:10	113.073
07/23/02	13:02:10	108.920
07/23/02	13:03:10	92.796
07/23/02	13:04:10	94.985
07/23/02	13:05:10	96.692
07/23/02	13:06:10	94.019
07/23/02	13:07:10	95.469
07/23/02	13:08:10	100.872
07/23/02	13:09:10	104.598
07/23/02	13:10:10	109.176
07/23/02	13:11:10	110.797
07/23/02	13:12:10	107.129
07/23/02	13:13:10	94.758
07/23/02	13:14:10	100.702
07/23/02	13:15:10	95.640
07/23/02	13:16:10	94.104
07/23/02	13:17:10	97.517
07/23/02	13:18:10	100.133
07/23/02	13:19:10	102.891
07/23/02	13:20:10	104.939
07/23/02	13:21:10	111.707
07/23/02	13:22:10	109.091
07/23/02	13:23:10	103.062
07/23/02	13:24:10	99.962
07/23/02	13:25:10	98.000
07/23/02	13:26:10	97.118
07/23/02	13:27:10	88.160
07/23/02	13:28:10	100.218
07/23/02	13:29:10	99.393
07/23/02	13:30:10	96.777
07/23/02	13:31:10	108.266
07/23/02	13:32:10	110.399
07/23/02	13:33:10	109.916
07/23/02	13:34:10	104.854
07/23/02	13:35:10	91.175
07/23/02	13:36:10	96.038
07/23/02	13:37:10	92.796
07/23/02	13:38:10	95.896
07/23/02	13:39:10	97.431
07/23/02	13:40:10	98.569
07/23/02	13:41:10	99.308
07/23/02	13:42:10	104.114
07/23/02	13:43:10	104.854
07/23/02	13:44:10	104.370
07/23/02	13:45:10	103.460
07/23/02	13:46:10	97.346
07/23/02	13:47:10	98.739
07/23/02	13:48:10	94.104
07/23/02	13:49:10	94.673
07/23/02	13:50:10	97.346
07/23/02	13:51:10	98.483
07/23/02	13:52:10	102.493
07/23/02	13:53:10	109.262
07/23/02	13:54:10	112.333
07/23/02	13:55:10	108.920
07/23/02	13:56:10	96.038
07/23/02	13:57:10	101.925
07/23/02	13:58:10	96.123
07/23/02	13:59:10	92.710
07/23/02	14:00:10	91.971
07/23/02	14:01:10	95.554

COFFEE AND POSEY - NO. 7484 cont.

Date	Time	Pres (PSI)
07/23/02	14:02:10	99.223
07/23/02	14:03:10	103.147
07/23/02	14:04:10	105.821
07/23/02	14:05:10	109.660
07/23/02	14:06:10	108.522
07/23/02	14:07:10	102.721
07/23/02	14:08:10	101.498
07/23/02	14:09:10	98.427
07/23/02	14:10:10	96.550
07/23/02	14:11:10	94.900
07/23/02	14:12:10	100.360
07/23/02	14:13:10	103.233
07/23/02	14:14:10	106.077
07/23/02	14:15:10	107.129
07/23/02	14:16:10	107.214
07/23/02	14:17:10	105.508
07/23/02	14:18:10	100.275
07/23/02	14:19:10	96.777
07/23/02	14:20:10	90.265
07/23/02	14:21:10	93.677
07/23/02	14:22:10	94.189
07/23/02	14:23:10	96.692
07/23/02	14:24:10	95.156
07/23/02	14:25:10	100.275
07/23/02	14:26:10	102.977
07/23/02	14:27:10	105.991
07/23/02	14:28:10	105.024
07/23/02	14:29:10	107.612
07/23/02	14:30:10	106.645
07/23/02	14:31:10	101.356
07/23/02	14:32:10	98.000
07/23/02	14:33:10	92.966
07/23/02	14:34:10	90.748
07/23/02	14:35:10	94.189
07/23/02	14:36:10	96.208
07/23/02	14:37:10	100.531
07/23/02	14:38:10	103.546
07/23/02	14:39:10	106.247
07/23/02	14:40:10	108.181
07/23/02	14:41:10	105.167
07/23/02	14:42:10	102.977
07/23/02	14:43:10	95.810
07/23/02	14:44:10	96.123
07/23/02	14:45:10	87.079
07/23/02	14:46:10	97.687
07/23/02	14:47:10	100.133
07/23/02	14:48:10	100.929
07/23/02	14:49:10	106.901
07/23/02	14:50:10	109.091
07/23/02	14:51:10	110.968
07/23/02	14:52:10	106.077
07/23/02	14:53:10	101.754
07/23/02	14:54:10	99.962
07/23/02	14:55:10	95.896
07/23/02	14:56:10	93.450
07/23/02	14:57:10	96.862
07/23/02	14:58:10	100.787
07/23/02	14:59:10	106.162
07/23/02	15:00:10	108.608
07/23/02	15:01:10	109.262
07/23/02	15:02:10	111.196
07/23/02	15:03:10	107.385
07/23/02	15:04:10	102.721
07/23/02	15:05:10	96.464
07/23/02	15:06:10	92.881
07/23/02	15:07:10	93.109

Date	Time	Pres (PSI)
07/23/02	15:08:10	97.602
07/23/02	15:09:10	100.929
07/23/02	15:10:10	105.422
07/23/02	15:11:10	108.693
07/23/02	15:12:10	112.276
07/23/02	15:13:10	112.333
07/23/02	15:14:10	106.304
07/23/02	15:15:10	104.370
07/23/02	15:16:10	97.431
07/23/02	15:17:10	91.800
07/23/02	15:18:10	93.109
07/23/02	15:19:10	98.569
07/23/02	15:20:10	106.645
07/23/02	15:21:10	103.062
07/23/02	15:22:10	110.143
07/23/02	15:23:10	110.797
07/23/02	15:24:10	110.485
07/23/02	15:25:10	102.067
07/23/02	15:26:10	100.531
07/23/02	15:27:10	97.687
07/23/02	15:28:10	93.677
07/23/02	15:29:10	89.298
07/23/02	15:30:10	93.763
07/23/02	15:31:10	96.635
07/23/02	15:32:10	100.360
07/23/02	15:33:10	104.512
07/23/02	15:34:10	104.114
07/23/02	15:35:10	106.162
07/23/02	15:36:10	108.835
07/23/02	15:37:10	91.800
07/23/02	15:38:10	95.241
07/23/02	15:39:10	93.194
07/23/02	15:40:10	92.796
07/23/02	15:41:10	94.502
07/23/02	15:42:10	96.692
07/23/02	15:43:10	100.787
07/23/02	15:44:10	103.546
07/23/02	15:45:10	108.608
07/23/02	15:46:10	107.698
07/23/02	15:47:10	108.181
07/23/02	15:48:10	103.147
07/23/02	15:49:10	103.233
07/23/02	15:50:10	97.517
07/23/02	15:51:10	86.937
07/23/02	15:52:10	98.483
07/23/02	15:53:10	100.360
07/23/02	15:54:10	105.337
07/23/02	15:55:10	110.399
07/23/02	15:56:10	112.504
07/23/02	15:57:10	110.797
07/23/02	15:58:10	104.285
07/23/02	15:59:10	102.010
07/23/02	16:00:10	97.517
07/23/02	16:01:10	95.241
07/23/02	16:02:10	92.227
07/23/02	16:03:10	98.171
07/23/02	16:04:10	101.754
07/23/02	16:05:10	105.735
07/23/02	16:06:10	104.854
07/23/02	16:07:10	107.385
07/23/02	16:08:10	109.489
07/23/02	16:09:10	108.181
07/23/02	16:10:10	102.664
07/23/02	16:11:10	97.602
07/23/02	16:12:10	94.502
07/23/02	16:13:10	92.142

Date	Time	Pres (PSI)
07/23/02	16:14:10	95.327
07/23/02	16:15:10	97.261
07/23/02	16:16:10	97.431
07/23/02	16:17:10	97.915
07/23/02	16:18:10	97.915
07/23/02	16:19:10	104.285
07/23/02	16:20:10	103.375
07/23/02	16:21:10	107.954
07/23/02	16:22:10	108.437
07/23/02	16:23:10	105.167
07/23/02	16:24:10	99.223
07/23/02	16:25:10	96.692
07/23/02	16:26:10	93.848
07/23/02	16:27:10	96.294
07/23/02	16:28:10	96.777
07/23/02	16:29:10	102.806
07/23/02	16:30:10	103.546
07/23/02	16:31:10	106.389
07/23/02	16:32:10	108.352
07/23/02	16:33:10	106.901
07/23/02	16:34:10	101.185
07/23/02	16:35:10	95.327
07/23/02	16:36:10	92.625
07/23/02	16:37:10	90.833
07/23/02	16:38:10	95.327
07/23/02	16:39:10	98.341
07/23/02	16:40:10	101.356
07/23/02	16:41:10	99.962
07/23/02	16:42:10	103.801
07/23/02	16:43:10	108.437
07/23/02	16:44:10	109.830
07/23/02	16:45:10	104.370
07/23/02	16:46:10	100.531
07/23/02	16:47:10	95.241
07/23/02	16:48:10	95.469
07/23/02	16:49:10	92.056
07/23/02	16:50:10	97.772
07/23/02	16:51:10	102.891
07/23/02	16:52:10	104.854
07/23/02	16:53:10	105.735
07/23/02	16:54:10	107.470
07/23/02	16:55:10	103.375
07/23/02	16:56:10	100.531
07/23/02	16:57:10	96.208
07/23/02	16:58:10	96.550
07/23/02	16:59:10	95.071
07/23/02	17:00:10	95.896
07/23/02	17:01:10	101.839
07/23/02	17:02:10	104.768
07/23/02	17:03:10	107.214
07/23/02	17:04:10	110.883
07/23/02	17:05:10	108.750
07/23/02	17:06:10	103.546
07/23/02	17:07:10	101.270
07/23/02	17:08:10	95.896
07/23/02	17:09:10	94.104
07/23/02	17:10:10	91.232
07/23/02	17:11:10	95.241
07/23/02	17:12:10	100.531
07/23/02	17:13:10	104.854
07/23/02	17:14:10	107.698
07/23/02	17:15:10	107.385
07/23/02	17:16:10	97.915
07/23/02	17:17:10	96.294
07/23/02	17:18:10	95.981
07/23/02	17:19:10	93.763

Date	Time	Pres (PSI)
07/23/02	17:20:10	94.189
07/23/02	17:21:10	97.772
07/23/02	17:22:10	95.896
07/23/02	17:23:10	101.185
07/23/02	17:24:10	101.441
07/23/02	17:25:10	106.731
07/23/02	17:26:10	108.920
07/23/02	17:27:10	98.654
07/23/02	17:28:10	97.346
07/23/02	17:29:10	97.517
07/23/02	17:30:10	94.246
07/23/02	17:31:10	92.796
07/23/02	17:32:10	97.431
07/23/02	17:33:10	101.100
07/23/02	17:34:10	100.275
07/23/02	17:35:10	105.906
07/23/02	17:36:10	108.920
07/23/02	17:37:10	104.456
07/23/02	17:38:10	98.427
07/23/02	17:39:10	94.673
07/23/02	17:40:10	92.966
07/23/02	17:41:10	93.279
07/23/02	17:42:10	95.896
07/23/02	17:43:10	98.825
07/23/02	17:44:10	102.977
07/23/02	17:45:10	104.683
07/23/02	17:46:10	107.385
07/23/02	17:47:10	105.735
07/23/02	17:48:10	99.877
07/23/02	17:49:10	98.654
07/23/02	17:50:10	94.331
07/23/02	17:51:10	91.004
07/23/02	17:52:10	93.535
07/23/02	17:53:10	96.123
07/23/02	17:54:10	100.702
07/23/02	17:55:10	98.995
07/23/02	17:56:10	100.446
07/23/02	17:57:10	103.716
07/23/02	17:58:10	99.877
07/23/02	17:59:10	98.341
07/23/02	18:00:10	97.204
07/23/02	18:01:10	96.550
07/23/02	18:02:10	92.056
07/23/02	18:03:10	95.327
07/23/02	18:04:10	95.412
07/23/02	18:05:10	101.270
07/23/02	18:06:10	102.010
07/23/02	18:07:10	103.546
07/23/02	18:08:10	105.593
07/23/02	18:09:10	99.706
07/23/02	18:10:10	95.896
07/23/02	18:11:10	95.327
07/23/02	18:12:10	92.710
07/23/02	18:13:10	90.179
07/23/02	18:14:10	92.312
07/23/02	18:15:10	96.464
07/23/02	18:16:10	98.256
07/23/02	18:17:10	101.185
07/23/02	18:18:10	103.716
07/23/02	18:19:10	105.337
07/23/02	18:20:10	104.200
07/23/02	18:21:10	98.739
07/23/02	18:22:10	95.810
07/23/02	18:23:10	89.440
07/23/02	18:24:10	91.089
07/23/02	18:25:10	94.815

COFFEE AND POSEY - NO. 7484 cont.

Date	Time	Pres (PSI)	Date	Time	Pres (PSI)	Date	Time	Pres (PSI)	Date	Time	Pres (PSI)
07/23/02	18:26:10	96.464	07/23/02	19:32:10	86.852	07/23/02	20:38:10	86.596	07/23/02	21:44:10	100.446
07/23/02	18:27:10	99.393	07/23/02	19:33:10	88.558	07/23/02	20:39:10	88.956	07/23/02	21:45:10	100.218
07/23/02	18:28:10	103.546	07/23/02	19:34:10	93.450	07/23/02	20:40:10	90.350	07/23/02	21:46:10	96.379
07/23/02	18:29:10	102.237	07/23/02	19:35:10	100.531	07/23/02	20:41:10	96.862	07/23/02	21:47:10	90.350
07/23/02	18:30:10	102.152	07/23/02	19:36:10	99.308	07/23/02	20:42:10	94.673	07/23/02	21:48:10	92.312
07/23/02	18:31:10	108.124	07/23/02	19:37:10	103.887	07/23/02	20:43:10	96.862	07/23/02	21:49:10	97.517
07/23/02	18:32:10	104.456	07/23/02	19:38:10	106.475	07/23/02	20:44:10	96.777	07/23/02	21:50:10	99.792
07/23/02	18:33:10	94.331	07/23/02	19:39:10	102.323	07/23/02	20:45:10	98.171	07/23/02	21:51:10	102.152
07/23/02	18:34:10	92.710	07/23/02	19:40:10	98.825	07/23/02	20:46:10	94.815	07/23/02	21:52:10	107.698
07/23/02	18:35:10	91.175	07/23/02	19:41:10	95.156	07/23/02	20:47:10	94.104	07/23/02	21:53:10	107.129
07/23/02	18:36:10	91.175	07/23/02	19:42:10	89.298	07/23/02	20:48:10	90.265	07/23/02	21:54:10	102.891
07/23/02	18:37:10	94.104	07/23/02	19:43:10	88.075	07/23/02	20:49:10	81.534	07/23/02	21:55:10	102.323
07/23/02	18:38:10	93.763	07/23/02	19:44:10	89.440	07/23/02	20:50:10	81.050	07/23/02	21:56:10	98.739
07/23/02	18:39:10	97.687	07/23/02	19:45:10	92.625	07/23/02	20:51:10	87.165	07/23/02	21:57:10	95.241
07/23/02	18:40:10	107.612	07/23/02	19:46:10	93.620	07/23/02	20:52:10	90.179	07/23/02	21:58:10	87.819
07/23/02	18:41:10	109.262	07/23/02	19:47:10	98.085	07/23/02	20:53:10	91.743	07/23/02	21:59:10	94.502
07/23/02	18:42:10	107.783	07/23/02	19:48:10	97.346	07/23/02	20:54:10	92.966	07/23/02	22:00:10	96.123
07/23/02	18:43:10	105.081	07/23/02	19:49:10	101.669	07/23/02	20:55:10	91.089	07/23/02	22:01:10	98.085
07/23/02	18:44:10	100.616	07/23/02	19:50:10	98.483	07/23/02	20:56:10	94.019	07/23/02	22:02:10	102.664
07/23/02	18:45:10	96.208	07/23/02	19:51:10	91.317	07/23/02	20:57:10	98.256	07/23/02	22:03:10	105.252
07/23/02	18:46:10	90.521	07/23/02	19:52:10	90.094	07/23/02	20:58:10	99.138	07/23/02	22:04:10	105.337
07/23/02	18:47:10	88.473	07/23/02	19:53:10	87.648	07/23/02	20:59:10	100.218	07/23/02	22:05:10	100.702
07/23/02	18:48:10	92.540	07/23/02	19:54:10	89.696	07/23/02	21:00:10	97.261	07/23/02	22:06:10	95.810
07/23/02	18:49:10	96.294	07/23/02	19:55:10	89.440	07/23/02	21:01:10	90.179	07/23/02	22:07:10	94.019
07/23/02	18:50:10	98.427	07/23/02	19:56:10	93.023	07/23/02	21:02:10	84.719	07/23/02	22:08:10	90.179
07/23/02	18:51:10	101.839	07/23/02	19:57:10	96.692	07/23/02	21:03:10	83.752	07/23/02	22:09:10	92.710
07/23/02	18:52:10	104.114	07/23/02	19:58:10	95.554	07/23/02	21:04:10	84.634	07/23/02	22:10:10	95.327
07/23/02	18:53:10	101.270	07/23/02	19:59:10	100.446	07/23/02	21:05:10	88.644	07/23/02	22:11:10	101.270
07/23/02	18:54:10	101.441	07/23/02	20:00:10	101.100	07/23/02	21:06:10	91.089	07/23/02	22:12:10	104.854
07/23/02	18:55:10	93.620	07/23/02	20:01:10	95.412	07/23/02	21:07:10	95.981	07/23/02	22:13:10	108.437
07/23/02	18:56:10	91.573	07/23/02	20:02:10	93.109	07/23/02	21:08:10	98.654	07/23/02	22:14:10	109.745
07/23/02	18:57:10	89.611	07/23/02	20:03:10	87.079	07/23/02	21:09:10	97.118	07/23/02	22:15:10	107.043
07/23/02	18:58:10	88.388	07/23/02	20:04:10	84.406	07/23/02	21:10:10	99.052	07/23/02	22:16:10	101.356
07/23/02	18:59:10	91.743	07/23/02	20:05:10	84.975	07/23/02	21:11:10	101.839	07/23/02	22:17:10	98.085
07/23/02	19:00:10	94.417	07/23/02	20:06:10	89.781	07/23/02	21:12:10	97.118	07/23/02	22:18:10	93.023
07/23/02	19:01:10	95.810	07/23/02	20:07:10	93.763	07/23/02	21:13:10	91.743	07/23/02	22:19:10	92.398
07/23/02	19:02:10	100.048	07/23/02	20:08:10	97.346	07/23/02	21:14:10	87.648	07/23/02	22:20:10	93.194
07/23/02	19:03:10	104.029	07/23/02	20:09:10	100.616	07/23/02	21:15:10	86.852	07/23/02	22:21:10	96.038
07/23/02	19:04:10	106.560	07/23/02	20:10:10	105.252	07/23/02	21:16:10	90.350	07/23/02	22:22:10	96.123
07/23/02	19:05:10	103.147	07/23/02	20:11:10	100.133	07/23/02	21:17:10	94.985	07/23/02	22:23:10	98.654
07/23/02	19:06:10	94.815	07/23/02	20:12:10	98.171	07/23/02	21:18:10	96.464	07/23/02	22:24:10	101.669
07/23/02	19:07:10	89.127	07/23/02	20:13:10	97.602	07/23/02	21:19:10	100.531	07/23/02	22:25:10	99.479
07/23/02	19:08:10	85.146	07/23/02	20:14:10	90.521	07/23/02	21:20:10	104.854	07/23/02	22:26:10	106.077
07/23/02	19:09:10	88.871	07/23/02	20:15:10	86.027	07/23/02	21:21:10	104.370	07/23/02	22:27:10	101.925
07/23/02	19:10:10	92.454	07/23/02	20:16:10	92.142	07/23/02	21:22:10	103.062	07/23/02	22:28:10	97.829
07/23/02	19:11:10	92.312	07/23/02	20:17:10	94.758	07/23/02	21:23:10	99.962	07/23/02	22:29:10	96.692
07/23/02	19:12:10	97.204	07/23/02	20:18:10	95.071	07/23/02	21:24:10	93.364	07/23/02	22:30:10	92.796
07/23/02	19:13:10	96.038	07/23/02	20:19:10	98.000	07/23/02	21:25:10	89.952	07/23/02	22:31:10	91.971
07/23/02	19:14:10	98.256	07/23/02	20:20:10	104.029	07/23/02	21:26:10	91.232	07/23/02	22:32:10	96.777
07/23/02	19:15:10	99.792	07/23/02	20:21:10	105.678	07/23/02	21:27:10	93.194	07/23/02	22:33:10	100.929
07/23/02	19:16:10	103.062	07/23/02	20:22:10	103.944	07/23/02	21:28:10	95.156	07/23/02	22:34:10	106.475
07/23/02	19:17:10	103.233	07/23/02	20:23:10	100.275	07/23/02	21:29:10	96.862	07/23/02	22:35:10	108.437
07/23/02	19:18:10	104.200	07/23/02	20:24:10	95.810	07/23/02	21:30:10	100.702	07/23/02	22:36:10	108.352
07/23/02	19:19:10	99.792	07/23/02	20:25:10	89.212	07/23/02	21:31:10	102.891	07/23/02	22:37:10	104.683
07/23/02	19:20:10	93.677	07/23/02	20:26:10	87.563	07/23/02	21:32:10	103.801	07/23/02	22:38:10	101.270
07/23/02	19:21:10	91.800	07/23/02	20:27:10	90.350	07/23/02	21:33:10	99.564	07/23/02	22:39:10	98.825
07/23/02	19:22:10	91.317	07/23/02	20:28:10	92.710	07/23/02	21:34:10	93.364	07/23/02	22:40:10	97.346
07/23/02	19:23:10	96.464	07/23/02	20:29:10	93.677	07/23/02	21:35:10	92.881	07/23/02	22:41:10	93.535
07/23/02	19:24:10	99.308	07/23/02	20:30:10	96.038	07/23/02	21:36:10	91.573	07/23/02	22:42:10	94.673
07/23/02	19:25:10	105.024	07/23/02	20:31:10	100.787	07/23/02	21:37:10	90.179	07/23/02	22:43:10	98.569
07/23/02	19:26:10	106.475	07/23/02	20:32:10	100.787	07/23/02	21:38:10	95.640	07/23/02	22:44:10	100.275
07/23/02	19:27:10	106.816	07/23/02	20:33:10	100.787	07/23/02	21:39:10	98.171	07/23/02	22:45:10	102.237
07/23/02	19:28:10	105.337	07/23/02	20:34:10	98.995	07/23/02	21:40:10	104.512	07/23/02	22:46:10	101.839
07/23/02	19:29:10	100.929	07/23/02	20:35:10	91.658	07/23/02	21:41:10	107.129	07/23/02	22:47:10	103.944
07/23/02	19:30:10	96.464	07/23/02	20:36:10	87.250	07/23/02	21:42:10	107.385	07/23/02	22:48:10	102.664
07/23/02	19:31:10	88.388	07/23/02	20:37:10	83.411	07/23/02	21:43:10	106.731	07/23/02	22:49:10	100.616

COFFEE AND POSEY - NO. 7484 cont.

Date	Time	Pres (PSI)
07/23/02	22:50:10	98.654
07/23/02	22:51:10	95.241
07/23/02	22:52:10	94.331
07/23/02	22:53:10	97.118
07/23/02	22:54:10	101.100
07/23/02	22:55:10	105.678
07/23/02	22:56:10	106.475
07/23/02	22:57:10	110.143
07/23/02	22:58:10	107.129
07/23/02	22:59:10	104.939
07/23/02	23:00:10	102.323
07/23/02	23:01:10	99.393
07/23/02	23:02:10	96.464
07/23/02	23:03:10	97.204
07/23/02	23:04:10	102.237
07/23/02	23:05:10	103.801
07/23/02	23:06:10	109.319
07/23/02	23:07:10	113.983
07/23/02	23:08:10	109.916
07/23/02	23:09:10	103.887
07/23/02	23:10:10	100.275
07/23/02	23:11:10	98.569
07/23/02	23:12:10	94.673
07/23/02	23:13:10	94.587
07/23/02	23:14:10	97.602
07/23/02	23:15:10	101.925
07/23/02	23:16:10	103.375
07/23/02	23:17:10	108.039
07/23/02	23:18:10	111.537
07/23/02	23:19:10	106.958
07/23/02	23:20:10	105.593
07/23/02	23:21:10	102.721
07/23/02	23:22:10	101.669
07/23/02	23:23:10	98.569
07/23/02	23:24:10	97.772
07/23/02	23:25:10	97.118
07/23/02	23:26:10	103.233
07/23/02	23:27:10	107.129
07/23/02	23:28:10	110.797
07/23/02	23:29:10	112.106
07/23/02	23:30:10	107.868
07/23/02	23:31:10	105.337
07/23/02	23:32:10	102.806
07/23/02	23:33:10	99.877
07/23/02	23:34:10	96.777
07/23/02	23:35:10	93.364
07/23/02	23:36:10	97.261
07/23/02	23:37:10	102.721
07/23/02	23:38:10	106.645
07/23/02	23:39:10	110.229
07/23/02	23:40:10	113.897
07/23/02	23:41:10	108.920
07/23/02	23:42:10	106.389
07/23/02	23:43:10	103.233
07/23/02	23:44:10	100.531
07/23/02	23:45:10	98.739
07/23/02	23:46:10	94.900
07/23/02	23:47:10	98.739
07/23/02	23:48:10	103.716
07/23/02	23:49:10	108.437
07/23/02	23:50:10	111.196
07/23/02	23:51:10	112.589
07/23/02	23:52:10	109.745
07/23/02	23:53:10	105.593
07/23/02	23:54:10	102.664
07/23/02	23:55:10	100.531
07/23/02	23:56:10	98.654
07/23/02	23:57:10	96.038
07/23/02	23:58:10	100.446
07/23/02	23:59:10	105.906
07/24/02	00:00:10	110.143
07/24/02	00:01:10	113.328
07/24/02	00:02:10	114.210
07/24/02	00:03:10	107.527
07/24/02	00:04:10	105.422
07/24/02	00:05:10	101.100
07/24/02	00:06:10	99.393
07/24/02	00:07:10	97.687
07/24/02	00:08:10	95.810
07/24/02	00:09:10	99.308
07/24/02	00:10:10	105.024
07/24/02	00:11:10	108.437
07/24/02	00:12:10	113.158
07/24/02	00:13:10	113.414
07/24/02	00:14:10	108.608
07/24/02	00:15:10	106.645
07/24/02	00:16:10	103.062
07/24/02	00:17:10	102.579
07/24/02	00:18:10	99.308
07/24/02	00:19:10	98.739
07/24/02	00:20:10	95.896
07/24/02	00:21:10	103.290
07/24/02	00:22:10	106.304
07/24/02	00:23:10	110.058
07/24/02	00:24:10	113.499
07/24/02	00:25:10	111.764
07/24/02	00:26:10	108.181
07/24/02	00:27:10	104.114
07/24/02	00:28:10	103.147
07/24/02	00:29:10	99.479
07/24/02	00:30:10	97.687
07/24/02	00:31:10	97.772
07/24/02	00:32:10	101.669
07/24/02	00:33:10	106.958
07/24/02	00:34:10	110.229
07/24/02	00:35:10	109.973
07/24/02	00:36:10	110.883
07/24/02	00:37:10	105.508
07/24/02	00:38:10	102.010
07/24/02	00:39:10	100.133
07/24/02	00:40:10	98.341
07/24/02	00:41:10	95.640
07/24/02	00:42:10	101.754
07/24/02	00:43:10	103.887
07/24/02	00:44:10	109.262
07/24/02	00:45:10	112.191
07/24/02	00:46:10	112.674
07/24/02	00:47:10	108.181
07/24/02	00:48:10	103.944
07/24/02	00:49:10	102.323
07/24/02	00:50:10	98.910
07/24/02	00:51:10	96.777
07/24/02	00:52:10	96.379
07/24/02	00:53:10	102.806
07/24/02	00:54:10	105.735
07/24/02	00:55:10	110.712
07/24/02	00:56:10	113.641
07/24/02	00:57:10	111.451
07/24/02	00:58:10	107.043
07/24/02	00:59:10	103.062
07/24/02	01:00:10	101.356
07/24/02	01:01:10	97.602
07/24/02	01:02:10	96.692
07/24/02	01:03:10	99.138
07/24/02	01:04:10	103.460
07/24/02	01:05:10	106.958
07/24/02	01:06:10	109.575
07/24/02	01:07:10	112.191
07/24/02	01:08:10	110.314
07/24/02	01:09:10	104.768
07/24/02	01:10:10	102.237
07/24/02	01:11:10	98.739
07/24/02	01:12:10	96.208
07/24/02	01:13:10	97.118
07/24/02	01:14:10	101.185
07/24/02	01:15:10	106.304
07/24/02	01:16:10	109.745
07/24/02	01:17:10	113.328
07/24/02	01:18:10	111.622
07/24/02	01:19:10	106.077
07/24/02	01:20:10	103.233
07/24/02	01:21:10	100.702
07/24/02	01:22:10	96.379
07/24/02	01:23:10	95.412
07/24/02	01:24:10	100.133
07/24/02	01:25:10	103.944
07/24/02	01:26:10	106.958
07/24/02	01:27:10	111.850
07/24/02	01:28:10	114.295
07/24/02	01:29:10	110.797
07/24/02	01:30:10	106.645
07/24/02	01:31:10	103.233
07/24/02	01:32:10	100.702
07/24/02	01:33:10	98.995
07/24/02	01:34:10	96.635
07/24/02	01:35:10	98.654
07/24/02	01:36:10	103.546
07/24/02	01:37:10	108.608
07/24/02	01:38:10	112.276
07/24/02	01:39:10	114.295
07/24/02	01:40:10	109.575
07/24/02	01:41:10	104.854
07/24/02	01:42:10	102.806
07/24/02	01:43:10	100.218
07/24/02	01:44:10	97.261
07/24/02	01:45:10	96.948
07/24/02	01:46:10	102.493
07/24/02	01:47:10	105.422
07/24/02	01:48:10	110.399
07/24/02	01:49:10	112.276
07/24/02	01:50:10	112.987
07/24/02	01:51:10	107.954
07/24/02	01:52:10	105.252
07/24/02	01:53:10	102.237
07/24/02	01:54:10	100.218
07/24/02	01:55:10	97.829
07/24/02	01:56:10	96.038
07/24/02	01:57:10	100.048
07/24/02	01:58:10	105.821
07/24/02	01:59:10	110.143
07/24/02	02:00:10	113.328
07/24/02	02:01:10	113.158
07/24/02	02:02:10	107.954
07/24/02	02:03:10	104.456
07/24/02	02:04:10	102.579
07/24/02	02:05:10	100.218
07/24/02	02:06:10	98.341
07/24/02	02:07:10	97.204
07/24/02	02:08:10	102.977
07/24/02	02:09:10	106.901
07/24/02	02:10:10	111.366
07/24/02	02:11:10	112.504
07/24/02	02:12:10	110.797
07/24/02	02:13:10	107.783
07/24/02	02:14:10	103.631
07/24/02	02:15:10	101.100
07/24/02	02:16:10	99.564
07/24/02	02:17:10	97.118
07/24/02	02:18:10	98.910
07/24/02	02:19:10	103.887
07/24/02	02:20:10	106.475
07/24/02	02:21:10	113.073
07/24/02	02:22:10	114.949
07/24/02	02:23:10	108.750
07/24/02	02:24:10	107.043
07/24/02	02:25:10	103.290
07/24/02	02:26:10	99.308
07/24/02	02:27:10	98.000
07/24/02	02:28:10	96.692
07/24/02	02:29:10	100.929
07/24/02	02:30:10	106.731
07/24/02	02:31:10	110.485
07/24/02	02:32:10	113.243
07/24/02	02:33:10	113.556
07/24/02	02:34:10	107.527
07/24/02	02:35:10	104.683
07/24/02	02:36:10	102.237
07/24/02	02:37:10	100.531
07/24/02	02:38:10	98.654
07/24/02	02:39:10	96.777
07/24/02	02:40:10	100.218
07/24/02	02:41:10	105.081
07/24/02	02:42:10	109.830
07/24/02	02:43:10	113.499
07/24/02	02:44:10	114.153
07/24/02	02:45:10	109.006
07/24/02	02:46:10	106.247
07/24/02	02:47:10	100.531
07/24/02	02:48:10	99.223
07/24/02	02:49:10	96.208
07/24/02	02:50:10	96.948
07/24/02	02:51:10	102.010
07/24/02	02:52:10	104.200
07/24/02	02:53:10	108.124
07/24/02	02:54:10	109.575
07/24/02	02:55:10	111.935
07/24/02	02:56:10	106.816
07/24/02	02:57:10	103.062
07/24/02	02:58:10	99.962
07/24/02	02:59:10	96.862
07/24/02	03:00:10	96.294
07/24/02	03:01:10	102.152
07/24/02	03:02:10	105.906
07/24/02	03:03:10	109.745
07/24/02	03:04:10	113.641
07/24/02	03:05:10	113.983
07/24/02	03:06:10	107.129
07/24/02	03:07:10	106.162
07/24/02	03:08:10	102.664
07/24/02	03:09:10	98.825
07/24/02	03:10:10	98.256
07/24/02	03:11:10	94.900
07/24/02	03:12:10	101.925
07/24/02	03:13:10	105.337

COFFEE AND POSEY - NO. 7484 cont.

Date	Time	Pres (PSI)
07/24/02	03:14:10	109.973
07/24/02	03:15:10	113.727
07/24/02	03:16:10	112.333
07/24/02	03:17:10	108.266
07/24/02	03:18:10	105.252
07/24/02	03:19:10	101.356
07/24/02	03:20:10	99.479
07/24/02	03:21:10	96.777
07/24/02	03:22:10	98.000
07/24/02	03:23:10	103.233
07/24/02	03:24:10	108.437
07/24/02	03:25:10	111.850
07/24/02	03:26:10	115.860
07/24/02	03:27:10	110.485
07/24/02	03:28:10	106.816
07/24/02	03:29:10	104.683
07/24/02	03:30:10	102.067
07/24/02	03:31:10	99.393
07/24/02	03:32:10	97.517
07/24/02	03:33:10	98.995
07/24/02	03:34:10	105.167
07/24/02	03:35:10	107.612
07/24/02	03:36:10	112.333
07/24/02	03:37:10	115.205
07/24/02	03:38:10	109.973
07/24/02	03:39:10	106.731
07/24/02	03:40:10	104.029
07/24/02	03:41:10	101.498
07/24/02	03:42:10	98.910
07/24/02	03:43:10	97.204
07/24/02	03:44:10	99.138
07/24/02	03:45:10	104.456
07/24/02	03:46:10	108.920
07/24/02	03:47:10	111.707
07/24/02	03:48:10	115.604
07/24/02	03:49:10	110.229
07/24/02	03:50:10	107.129
07/24/02	03:51:10	104.456
07/24/02	03:52:10	102.010
07/24/02	03:53:10	98.483
07/24/02	03:54:10	98.085
07/24/02	03:55:10	98.654
07/24/02	03:56:10	104.285
07/24/02	03:57:10	108.266
07/24/02	03:58:10	112.020
07/24/02	03:59:10	112.760
07/24/02	04:00:10	109.319
07/24/02	04:01:10	105.337
07/24/02	04:02:10	102.721
07/24/02	04:03:10	100.360
07/24/02	04:04:10	97.829
07/24/02	04:05:10	97.517
07/24/02	04:06:10	99.792
07/24/02	04:07:10	105.337
07/24/02	04:08:10	108.693
07/24/02	04:09:10	111.139
07/24/02	04:10:10	112.930
07/24/02	04:11:10	108.522
07/24/02	04:12:10	105.508
07/24/02	04:13:10	102.721
07/24/02	04:14:10	99.479
07/24/02	04:15:10	96.948
07/24/02	04:16:10	96.464
07/24/02	04:17:10	100.787
07/24/02	04:18:10	104.939
07/24/02	04:19:10	109.489
07/24/02	04:20:10	112.760
07/24/02	04:21:10	112.760
07/24/02	04:22:10	105.991
07/24/02	04:23:10	107.698
07/24/02	04:24:10	101.270
07/24/02	04:25:10	98.825
07/24/02	04:26:10	96.948
07/24/02	04:27:10	98.483
07/24/02	04:28:10	104.370
07/24/02	04:29:10	109.319
07/24/02	04:30:10	112.276
07/24/02	04:31:10	113.897
07/24/02	04:32:10	111.707
07/24/02	04:33:10	106.475
07/24/02	04:34:10	104.768
07/24/02	04:35:10	102.323
07/24/02	04:36:10	100.048
07/24/02	04:37:10	98.000
07/24/02	04:38:10	98.739
07/24/02	04:39:10	103.290
07/24/02	04:40:10	107.868
07/24/02	04:41:10	111.196
07/24/02	04:42:10	116.002
07/24/02	04:43:10	107.783
07/24/02	04:44:10	106.731
07/24/02	04:45:10	103.147
07/24/02	04:46:10	100.616
07/24/02	04:47:10	99.393
07/24/02	04:48:10	97.431
07/24/02	04:49:10	99.877
07/24/02	04:50:10	105.422
07/24/02	04:51:10	107.043
07/24/02	04:52:10	111.366
07/24/02	04:53:10	111.850
07/24/02	04:54:10	106.731
07/24/02	04:55:10	103.290
07/24/02	04:56:10	102.323
07/24/02	04:57:10	98.995
07/24/02	04:58:10	97.346
07/24/02	04:59:10	98.171
07/24/02	05:00:10	103.887
07/24/02	05:01:10	106.645
07/24/02	05:02:10	107.954
07/24/02	05:03:10	105.821
07/24/02	05:04:10	107.129
07/24/02	05:05:10	104.114
07/24/02	05:06:10	98.739
07/24/02	05:07:10	92.625
07/24/02	05:08:10	92.312
07/24/02	05:09:10	94.587
07/24/02	05:10:10	98.171
07/24/02	05:11:10	102.323
07/24/02	05:12:10	105.422
07/24/02	05:13:10	106.645
07/24/02	05:14:10	109.660
07/24/02	05:15:10	105.821
07/24/02	05:16:10	100.702
07/24/02	05:17:10	98.739
07/24/02	05:18:10	91.658
07/24/02	05:19:10	92.710
07/24/02	05:20:10	95.071
07/24/02	05:21:10	98.910
07/24/02	05:22:10	101.583
07/24/02	05:23:10	103.147
07/24/02	05:24:10	104.456
07/24/02	05:25:10	105.821
07/24/02	05:26:10	104.456
07/24/02	05:27:10	99.052
07/24/02	05:28:10	96.635
07/24/02	05:29:10	92.881
07/24/02	05:30:10	93.364
07/24/02	05:31:10	96.464
07/24/02	05:32:10	95.810
07/24/02	05:33:10	99.308
07/24/02	05:34:10	104.029
07/24/02	05:35:10	105.081
07/24/02	05:36:10	106.645
07/24/02	05:37:10	105.821
07/24/02	05:38:10	98.341
07/24/02	05:39:10	94.673
07/24/02	05:40:10	93.450
07/24/02	05:41:10	92.796
07/24/02	05:42:10	95.241
07/24/02	05:43:10	99.792
07/24/02	05:44:10	102.493
07/24/02	05:45:10	105.024
07/24/02	05:46:10	105.508
07/24/02	05:47:10	107.783
07/24/02	05:48:10	104.285
07/24/02	05:49:10	101.100
07/24/02	05:50:10	97.346
07/24/02	05:51:10	94.758
07/24/02	05:52:10	92.710
07/24/02	05:53:10	95.554
07/24/02	05:54:10	98.910
07/24/02	05:55:10	100.929
07/24/02	05:56:10	102.806
07/24/02	05:57:10	105.678
07/24/02	05:58:10	108.693
07/24/02	05:59:10	104.854
07/24/02	06:00:10	100.360
07/24/02	06:01:10	95.327
07/24/02	06:02:10	93.535
07/24/02	06:03:10	95.412
07/24/02	06:04:10	98.995
07/24/02	06:05:10	100.531
07/24/02	06:06:10	103.233
07/24/02	06:07:10	106.077
07/24/02	06:08:10	106.958
07/24/02	06:09:10	108.039
07/24/02	06:10:10	106.645
07/24/02	06:11:10	101.583
07/24/02	06:12:10	96.862
07/24/02	06:13:10	95.412
07/24/02	06:14:10	93.023
07/24/02	06:15:10	96.635
07/24/02	06:16:10	98.171
07/24/02	06:17:10	101.270
07/24/02	06:18:10	103.233
07/24/02	06:19:10	103.062
07/24/02	06:20:10	104.683
07/24/02	06:21:10	106.247
07/24/02	06:22:10	108.181
07/24/02	06:23:10	105.167
07/24/02	06:24:10	95.554
07/24/02	06:25:10	92.454
07/24/02	06:26:10	88.217
07/24/02	06:27:10	91.658
07/24/02	06:28:10	94.331
07/24/02	06:29:10	93.364
07/24/02	06:30:10	93.450
07/24/02	06:31:10	95.156
07/24/02	06:32:10	98.654
07/24/02	06:33:10	101.583
07/24/02	06:34:10	102.977
07/24/02	06:35:10	104.854
07/24/02	06:36:10	100.048
07/24/02	06:37:10	95.327
07/24/02	06:38:10	91.232
07/24/02	06:39:10	85.060
07/24/02	06:40:10	91.800
07/24/02	06:41:10	92.625
07/24/02	06:42:10	95.725
07/24/02	06:43:10	96.038
07/24/02	06:44:10	99.138
07/24/02	06:45:10	103.062
07/24/02	06:46:10	102.408
07/24/02	06:47:10	106.731
07/24/02	06:48:10	105.906
07/24/02	06:49:10	98.427
07/24/02	06:50:10	94.246
07/24/02	06:51:10	90.094
07/24/02	06:52:10	90.435
07/24/02	06:53:10	92.227
07/24/02	06:54:10	94.587
07/24/02	06:55:10	97.431
07/24/02	06:56:10	99.052
07/24/02	06:57:10	97.118
07/24/02	06:58:10	102.493
07/24/02	06:59:10	105.593
07/24/02	07:00:10	102.806
07/24/02	07:01:10	97.346
07/24/02	07:02:10	92.881
07/24/02	07:03:10	88.956
07/24/02	07:04:10	87.250
07/24/02	07:05:10	91.800
07/24/02	07:06:10	93.450
07/24/02	07:07:10	95.469
07/24/02	07:08:10	101.441
07/24/02	07:09:10	99.962
07/24/02	07:10:10	102.493
07/24/02	07:11:10	102.152
07/24/02	07:12:10	101.669
07/24/02	07:13:10	98.825
07/24/02	07:14:10	94.985
07/24/02	07:15:10	89.298
07/24/02	07:16:10	85.942
07/24/02	07:17:10	86.283
07/24/02	07:18:10	87.734
07/24/02	07:19:10	91.004
07/24/02	07:20:10	91.402
07/24/02	07:21:10	89.127
07/24/02	07:22:10	91.317
07/24/02	07:23:10	93.620
07/24/02	07:24:10	95.469
07/24/02	07:25:10	97.517
07/24/02	07:26:10	97.829
07/24/02	07:27:10	99.792
07/24/02	07:28:10	100.787
07/24/02	07:29:10	105.337
07/24/02	07:30:10	106.901
07/24/02	07:31:10	101.270
07/24/02	07:32:10	90.009
07/24/02	07:33:10	88.729
07/24/02	07:34:10	86.681
07/24/02	07:35:10	89.383
07/24/02	07:36:10	91.743
07/24/02	07:37:10	94.417

COFFEE AND POSEY - NO. 7484 cont.

Date	Time	Pres (PSI)
07/24/02	07:38:10	96.038
07/24/02	07:39:10	100.616
07/24/02	07:40:10	99.792
07/24/02	07:41:10	104.285
07/24/02	07:42:10	99.792
07/24/02	07:43:10	97.772
07/24/02	07:44:10	93.023
07/24/02	07:45:10	88.786
07/24/02	07:46:10	93.620
07/24/02	07:47:10	98.910
07/24/02	07:48:10	99.138
07/24/02	07:49:10	99.877
07/24/02	07:50:10	101.356
07/24/02	07:51:10	102.067
07/24/02	07:52:10	103.375
07/24/02	07:53:10	105.593
07/24/02	07:54:10	101.441
07/24/02	07:55:10	98.910
07/24/02	07:56:10	96.635
07/24/02	07:57:10	91.232
07/24/02	07:58:10	87.904
07/24/02	07:59:10	88.558
07/24/02	08:00:10	95.412
07/24/02	08:01:10	97.517
07/24/02	08:02:10	95.810
07/24/02	08:03:10	96.635
07/24/02	08:04:10	101.356
07/24/02	08:05:10	103.062
07/24/02	08:06:10	104.512
07/24/02	08:07:10	95.327
07/24/02	08:08:10	93.364
07/24/02	08:09:10	90.748
07/24/02	08:10:10	91.886
07/24/02	08:11:10	92.454
07/24/02	08:12:10	99.877
07/24/02	08:13:10	102.152
07/24/02	08:14:10	103.062
07/24/02	08:15:10	104.114
07/24/02	08:16:10	103.801
07/24/02	08:17:10	108.266
07/24/02	08:18:10	105.508
07/24/02	08:19:10	100.133
07/24/02	08:20:10	96.692
07/24/02	08:21:10	91.573
07/24/02	08:22:10	92.796
07/24/02	08:23:10	95.810
07/24/02	08:24:10	98.654
07/24/02	08:25:10	100.048
07/24/02	08:26:10	102.408
07/24/02	08:27:10	104.200
07/24/02	08:28:10	105.252
07/24/02	08:29:10	103.062
07/24/02	08:30:10	96.379
07/24/02	08:31:10	92.796
07/24/02	08:32:10	85.942
07/24/02	08:33:10	88.388
07/24/02	08:34:10	89.952
07/24/02	08:35:10	95.071
07/24/02	08:36:10	96.777
07/24/02	08:37:10	95.725
07/24/02	08:38:10	97.261
07/24/02	08:39:10	97.687
07/24/02	08:40:10	96.208
07/24/02	08:41:10	101.100
07/24/02	08:42:10	100.616
07/24/02	08:43:10	96.294
07/24/02	08:44:10	98.910
07/24/02	08:45:10	103.631
07/24/02	08:46:10	104.939
07/24/02	08:47:10	100.787
07/24/02	08:48:10	102.237
07/24/02	08:49:10	102.664
07/24/02	08:50:10	102.152
07/24/02	08:51:10	99.962
07/24/02	08:52:10	99.052
07/24/02	08:53:10	95.327
07/24/02	08:54:10	95.640
07/24/02	08:55:10	95.896
07/24/02	08:56:10	100.616
07/24/02	08:57:10	100.360
07/24/02	08:58:10	101.839
07/24/02	08:59:10	99.792
07/24/02	09:00:10	95.725
07/24/02	09:01:10	88.473
07/24/02	09:02:10	85.458
07/24/02	09:03:10	84.804
07/24/02	09:04:10	88.075
07/24/02	09:05:10	93.620
07/24/02	09:06:10	95.896
07/24/02	09:07:10	96.464
07/24/02	09:08:10	98.739
07/24/02	09:09:10	100.360
07/24/02	09:10:10	103.801
07/24/02	09:11:10	103.375
07/24/02	09:12:10	106.077
07/24/02	09:13:10	107.043
07/24/02	09:14:10	102.664
07/24/02	09:15:10	98.427
07/24/02	09:16:10	90.606
07/24/02	09:17:10	87.648
07/24/02	09:18:10	88.644
07/24/02	09:19:10	90.748
07/24/02	09:20:10	94.189
07/24/02	09:21:10	92.966
07/24/02	09:22:10	93.450
07/24/02	09:23:10	96.948
07/24/02	09:24:10	99.649
07/24/02	09:25:10	99.649
07/24/02	09:26:10	98.427
07/24/02	09:27:10	97.915
07/24/02	09:28:10	99.052
07/24/02	09:29:10	100.787
07/24/02	09:30:10	102.010
07/24/02	09:31:10	97.118
07/24/02	09:32:10	93.763
07/24/02	09:33:10	87.990
07/24/02	09:34:10	88.473
07/24/02	09:35:10	91.743
07/24/02	09:36:10	94.815
07/24/02	09:37:10	98.483
07/24/02	09:38:10	100.048
07/24/02	09:39:10	101.185
07/24/02	09:40:10	100.048
07/24/02	09:41:10	98.910
07/24/02	09:42:10	98.427
07/24/02	09:43:10	98.910
07/24/02	09:44:10	98.995
07/24/02	09:45:10	100.360
07/24/02	09:46:10	98.654
07/24/02	09:47:10	94.758
07/24/02	09:48:10	91.089
07/24/02	09:49:10	86.425
07/24/02	09:50:10	85.458
07/24/02	09:51:10	88.075
07/24/02	09:52:10	89.866
07/24/02	09:53:10	94.331
07/24/02	09:54:10	99.052
07/24/02	09:55:10	100.787
07/24/02	09:56:10	101.669
07/24/02	09:57:10	101.925
07/24/02	09:58:10	100.616
07/24/02	09:59:10	104.512
07/24/02	10:00:10	104.768
07/24/02	10:01:10	100.133
07/24/02	10:02:10	98.171
07/24/02	10:03:10	92.454
07/24/02	10:04:10	90.265
07/24/02	10:05:10	91.658
07/24/02	10:06:10	93.194
07/24/02	10:07:10	94.985
07/24/02	10:08:10	93.763
07/24/02	10:09:10	96.777
07/24/02	10:10:10	101.441
07/24/02	10:11:10	100.048
07/24/02	10:12:10	99.393
07/24/02	10:13:10	104.854
07/24/02	10:14:10	103.801
07/24/02	10:15:10	100.048
07/24/02	10:16:10	97.033
07/24/02	10:17:10	93.279
07/24/02	10:18:10	92.056
07/24/02	10:19:10	93.364
07/24/02	10:20:10	95.810
07/24/02	10:21:10	99.792
07/24/02	10:22:10	103.062
07/24/02	10:23:10	102.408
07/24/02	10:24:10	104.854
07/24/02	10:25:10	108.181
07/24/02	10:26:10	101.185
07/24/02	10:27:10	97.204
07/24/02	10:28:10	90.919
07/24/02	10:29:10	92.710
07/24/02	10:30:10	89.952
07/24/02	10:31:10	92.625
07/24/02	10:32:10	98.000
07/24/02	10:33:10	99.962
07/24/02	10:34:10	101.100
07/24/02	10:35:10	102.891
07/24/02	10:36:10	100.929
07/24/02	10:37:10	101.270
07/24/02	10:38:10	106.560
07/24/02	10:39:10	107.129
07/24/02	10:40:10	98.825
07/24/02	10:41:10	93.450
07/24/02	10:42:10	93.023
07/24/02	10:43:10	89.866
07/24/02	10:44:10	91.573
07/24/02	10:45:10	96.038
07/24/02	10:46:10	97.915
07/24/02	10:47:10	99.706
07/24/02	10:48:10	99.223
07/24/02	10:49:10	103.375
07/24/02	10:50:10	105.337
07/24/02	10:51:10	107.214
07/24/02	10:52:10	104.200
07/24/02	10:53:10	99.649
07/24/02	10:54:10	96.550
07/24/02	10:55:10	90.521
07/24/02	10:56:10	91.317
07/24/02	10:57:10	94.815
07/24/02	10:58:10	95.896
07/24/02	10:59:10	97.915
07/24/02	11:00:10	100.133
07/24/02	11:01:10	104.768
07/24/02	11:02:10	101.498
07/24/02	11:03:10	106.077
07/24/02	11:04:10	108.437
07/24/02	11:05:10	104.285
07/24/02	11:06:10	97.118
07/24/02	11:07:10	96.550
07/24/02	11:08:10	91.573
07/24/02	11:09:10	86.283
07/24/02	11:10:10	87.904
07/24/02	11:11:10	89.212
07/24/02	11:12:10	88.956
07/24/02	11:13:10	96.038
07/24/02	11:14:10	100.218
07/24/02	11:15:10	102.010
07/24/02	11:16:10	102.067
07/24/02	11:17:10	101.356
07/24/02	11:18:10	101.270
07/24/02	11:19:10	102.721
07/24/02	11:20:10	104.683
07/24/02	11:21:10	106.901
07/24/02	11:22:10	102.721
07/24/02	11:23:10	100.616
07/24/02	11:24:10	97.118
07/24/02	11:25:10	92.398
07/24/02	11:26:10	92.625
07/24/02	11:27:10	94.900
07/24/02	11:28:10	97.915
07/24/02	11:29:10	95.725
07/24/02	11:30:10	100.275
07/24/02	11:31:10	105.337
07/24/02	11:32:10	106.645
07/24/02	11:33:10	107.868
07/24/02	11:34:10	108.124
07/24/02	11:35:10	104.200
07/24/02	11:36:10	97.517
07/24/02	11:37:10	95.156
07/24/02	11:38:10	87.335
07/24/02	11:39:10	87.648
07/24/02	11:40:10	89.440
07/24/02	11:41:10	89.696
07/24/02	11:42:10	90.748
07/24/02	11:43:10	94.189
07/24/02	11:44:10	94.246
07/24/02	11:45:10	97.829
07/24/02	11:46:10	98.171
07/24/02	11:47:10	101.014
07/24/02	11:48:10	102.152
07/24/02	11:49:10	103.062
07/24/02	11:50:10	-0.796
07/24/02	11:51:10	-0.796
07/24/02	11:52:10	-0.796
07/24/02	11:53:10	-0.796
07/24/02	11:54:10	-0.882
07/24/02	11:55:10	-0.796
07/24/02	11:56:10	-0.796
07/24/02	11:57:10	-0.796
07/24/02	11:58:10	-0.796
07/24/02	11:59:10	-0.796
07/24/02	12:00:10	-0.796
07/24/02	12:01:10	-0.796

COFFEE AND POSEY - NO. 7484 cont.

Date	Time	Pres (PSI)
07/24/02	12:02:10	-0.796
07/24/02	12:03:10	-0.882
07/24/02	12:04:10	-0.796
07/24/02	12:05:10	-0.882
07/24/02	12:06:10	-0.882
07/24/02	12:07:10	-0.796
07/24/02	12:08:10	-0.882
07/24/02	12:09:10	-0.882
07/24/02	12:10:10	-0.882
07/24/02	12:11:10	-0.882
07/24/02	12:12:10	-0.882
07/24/02	12:13:10	-0.882
07/24/02	12:14:10	-0.882
07/24/02	12:15:10	-0.882
07/24/02	12:16:10	-0.967
07/24/02	12:17:10	-0.967
07/24/02	12:18:10	-0.882
07/24/02	12:19:10	-0.882
07/24/02	12:20:10	-0.882
07/24/02	12:21:10	-0.967
07/24/02	12:22:10	-0.967
07/24/02	12:23:10	-0.882
07/24/02	12:24:10	-0.967
07/24/02	12:25:10	-0.967
07/24/02	12:26:10	-0.967
07/24/02	12:27:10	-0.967
07/24/02	12:28:10	-0.967
07/24/02	12:29:10	-0.967
07/24/02	12:30:10	-0.967
07/24/02	12:31:10	-0.967
07/24/02	12:32:10	-0.967
07/24/02	12:33:10	-0.967
07/24/02	12:34:10	-0.967
07/24/02	12:35:10	-0.967
07/24/02	12:36:10	-0.967
07/24/02	12:37:10	-0.967
07/24/02	12:38:10	-0.967
07/24/02	12:39:10	-0.967
07/24/02	12:40:10	-0.967
07/24/02	12:41:10	-0.882
07/24/02	12:42:10	-0.882
07/24/02	12:43:10	-0.967
07/24/02	12:44:10	-0.882
07/24/02	12:45:10	-0.967
07/24/02	12:46:10	-0.882
07/24/02	12:47:10	-0.967
07/24/02	12:48:10	-0.882
07/24/02	12:49:10	-0.882
07/24/02	12:50:10	-0.967
07/24/02	12:51:10	-0.967
07/24/02	12:52:10	-0.967
07/24/02	12:53:10	-0.967
07/24/02	12:54:10	-0.967
07/24/02	12:55:10	-0.967
07/24/02	12:56:10	-0.882
07/24/02	12:57:10	-0.967
07/24/02	12:58:10	-0.967
07/24/02	12:59:10	-0.967
07/24/02	13:00:10	-0.967
07/24/02	13:01:10	-0.967
07/24/02	13:02:10	-0.967
07/24/02	13:03:10	-0.967
07/24/02	13:04:10	-0.967
07/24/02	13:05:10	-0.967
07/24/02	13:06:10	-0.967
07/24/02	13:07:10	-0.967
07/24/02	13:08:10	-0.967
07/24/02	13:09:10	-0.967
07/24/02	13:10:10	-0.967
07/24/02	13:11:10	-0.967
07/24/02	13:12:10	-0.967
07/24/02	13:13:10	-0.967
07/24/02	13:14:10	-0.967
07/24/02	13:15:10	-0.967
07/24/02	13:16:10	-0.967
07/24/02	13:17:10	-0.967
07/24/02	13:18:10	-0.967
07/24/02	13:19:10	-0.967
07/24/02	13:20:10	-0.967
07/24/02	13:21:10	-0.967
07/24/02	13:22:10	-0.967
07/24/02	13:23:10	-0.967
07/24/02	13:24:10	-0.967
07/24/02	13:25:10	-0.967
07/24/02	13:26:10	-1.052
07/24/02	13:27:10	-0.967
07/24/02	13:28:10	-0.967
07/24/02	13:29:10	-0.967
07/24/02	13:30:10	-0.967
07/24/02	13:31:10	-0.967
07/24/02	13:32:10	-0.967
07/24/02	13:33:10	-0.967
07/24/02	13:34:10	-0.967
07/24/02	13:35:10	-0.967
07/24/02	13:36:10	-0.967
07/24/02	13:37:10	-0.967
07/24/02	13:38:10	-0.967
07/24/02	13:39:10	-0.967
07/24/02	13:40:10	-0.967
07/24/02	13:41:10	-0.967
07/24/02	13:42:10	-0.967
07/24/02	13:43:10	-0.967
07/24/02	13:44:10	-0.967
07/24/02	13:45:10	-0.967
07/24/02	13:46:10	-0.967
07/24/02	13:47:10	-0.967
07/24/02	13:48:10	-0.967
07/24/02	13:49:10	-0.967
07/24/02	13:50:10	-0.967
07/24/02	13:51:10	-0.967
07/24/02	13:52:10	-0.967
07/24/02	13:53:10	-0.967
07/24/02	13:54:10	-0.967
07/24/02	13:55:10	-0.967
07/24/02	13:56:10	-0.967
07/24/02	13:57:10	-0.882
07/24/02	13:58:10	-0.967
07/24/02	13:59:10	-0.967
07/24/02	14:00:10	-0.967
07/24/02	14:01:10	-0.967
07/24/02	14:02:10	-0.967
07/24/02	14:03:10	-0.967
07/24/02	14:04:10	-0.967
07/24/02	14:05:10	-1.052
07/24/02	14:06:10	-1.052
07/24/02	14:07:10	-1.052
07/24/02	14:08:10	-0.967
07/24/02	14:09:10	-0.967
07/24/02	14:10:10	-0.967
07/24/02	14:11:10	-0.967
07/24/02	14:12:10	-0.967
07/24/02	14:13:10	-0.967
07/24/02	14:14:10	-0.967
07/24/02	14:15:10	-0.967
07/24/02	14:16:10	-0.967
07/24/02	14:17:10	-0.967
07/24/02	14:18:10	-0.967
07/24/02	14:19:10	-0.882
07/24/02	14:20:10	-0.967
07/24/02	14:21:10	-0.967
07/24/02	14:22:10	-0.882
07/24/02	14:23:10	-0.967
07/24/02	14:24:10	-0.967
07/24/02	14:25:10	-0.967
07/24/02	14:26:10	-0.967
07/24/02	14:27:10	-0.967
07/24/02	14:28:10	-0.967
07/24/02	14:29:10	-0.967
07/24/02	14:30:10	-0.967
07/24/02	14:31:10	-0.967
07/24/02	14:32:10	-1.052
07/24/02	14:33:10	-1.052
07/24/02	14:34:10	-1.052
07/24/02	14:35:10	-1.052
07/24/02	14:36:10	-1.052
07/24/02	14:37:10	-1.052
07/24/02	14:38:10	-1.052
07/24/02	14:39:10	-1.052
07/24/02	14:40:10	-1.052
07/24/02	14:41:10	-1.052
07/24/02	14:42:10	-1.052
07/24/02	14:43:10	-1.052
07/24/02	14:44:10	-1.052
07/24/02	14:45:10	-1.052
07/24/02	14:46:10	-1.052
07/24/02	14:47:10	-1.052
07/24/02	14:48:10	-1.052
07/24/02	14:49:10	-1.138
07/24/02	14:50:10	-1.052
07/24/02	14:51:10	-1.138
07/24/02	14:52:10	-1.138
07/24/02	14:53:10	-1.138
07/24/02	14:54:10	-1.052
07/24/02	14:55:10	-1.052
07/24/02	14:56:10	-1.052
07/24/02	14:57:10	-1.052
07/24/02	14:58:10	-0.967
07/24/02	14:59:10	-1.052
07/24/02	15:00:10	-1.052
07/24/02	15:01:10	-1.052
07/24/02	15:02:10	-1.052
07/24/02	15:03:10	-1.052
07/24/02	15:04:10	-1.052
07/24/02	15:05:10	-1.052
07/24/02	15:06:10	-1.052
07/24/02	15:07:10	-1.052
07/24/02	15:08:10	-0.967
07/24/02	15:09:10	-1.052
07/24/02	15:10:10	-1.052
07/24/02	15:11:10	-1.052
07/24/02	15:12:10	-1.052
07/24/02	15:13:10	-1.052
07/24/02	15:14:10	-1.052
07/24/02	15:15:10	-1.052
07/24/02	15:16:10	-1.052
07/24/02	15:17:10	-1.052
07/24/02	15:18:10	-1.052
07/24/02	15:19:10	-1.052
07/24/02	15:20:10	-1.052
07/24/02	15:21:10	-1.052
07/24/02	15:22:10	-1.052
07/24/02	15:23:10	-1.052
07/24/02	15:24:10	-1.052
07/24/02	15:25:10	-1.052
07/24/02	15:26:10	-1.052
07/24/02	15:27:10	-1.052
07/24/02	15:28:10	-1.052
07/24/02	15:29:10	-1.052
07/24/02	15:30:10	-1.052
07/24/02	15:31:10	-1.052
07/24/02	15:32:10	-1.052
07/24/02	15:33:10	-1.052
07/24/02	15:34:10	-1.052
07/24/02	15:35:10	-1.052
07/24/02	15:36:10	-1.052
07/24/02	15:37:10	-1.052
07/24/02	15:38:10	-1.052
07/24/02	15:39:10	-1.052
07/24/02	15:40:10	-1.052
07/24/02	15:41:10	-1.052
07/24/02	15:42:10	-1.052
07/24/02	15:43:10	-1.052
07/24/02	15:44:10	-1.052
07/24/02	15:45:10	-1.052
07/24/02	15:46:10	-1.052
07/24/02	15:47:10	-1.052
07/24/02	15:48:10	-1.052
07/24/02	15:49:10	-1.052
07/24/02	15:50:10	-1.052
07/24/02	15:51:10	-1.052
07/24/02	15:52:10	-1.052
07/24/02	15:53:10	-1.052
07/24/02	15:54:10	-1.052
07/24/02	15:55:10	-1.052
07/24/02	15:56:10	-1.052
07/24/02	15:57:10	-1.052
07/24/02	15:58:10	-1.138
07/24/02	15:59:10	-1.052
07/24/02	16:00:10	-1.052
07/24/02	16:01:10	-1.052
07/24/02	16:02:10	-1.052
07/24/02	16:03:10	-1.052
07/24/02	16:04:10	-1.052
07/24/02	16:05:10	-1.052
07/24/02	16:06:10	-1.052
07/24/02	16:07:10	-1.052
07/24/02	16:08:10	-1.138
07/24/02	16:09:10	-1.052
07/24/02	16:10:10	-1.052
07/24/02	16:11:10	-1.052
07/24/02	16:12:10	-1.052
07/24/02	16:13:10	-1.052
07/24/02	16:14:10	-1.052
07/24/02	16:15:10	-1.052
07/24/02	16:16:10	-1.052
07/24/02	16:17:10	-1.052
07/24/02	16:18:10	-1.138
07/24/02	16:19:10	-1.138
07/24/02	16:20:10	-1.052
07/24/02	16:21:10	-1.052
07/24/02	16:22:10	-1.052
07/24/02	16:23:10	-1.138
07/24/02	16:24:10	-1.138
07/24/02	16:25:10	-1.138

COFFEE AND POSEY - NO. 7484 cont.

Date	Time	Pres (PSI)	Date	Time	Pres (PSI)	Date	Time	Pres (PSI)	Date	Time	Pres (PSI)
07/24/02	16:26:10	-1.052									
07/24/02	16:27:10	-1.052									
07/24/02	16:28:10	-1.138									
07/24/02	16:29:10	-1.138									
07/24/02	16:30:10	-1.138									
07/24/02	16:31:10	-1.052									
07/24/02	16:32:10	-1.138									
07/24/02	16:33:10	-1.138									
07/24/02	16:34:10	-1.138									
07/24/02	16:35:10	-1.138									
07/24/02	16:36:10	-1.138									
07/24/02	16:37:10	-1.138									
07/24/02	16:38:10	-1.138									
07/24/02	16:39:10	-1.138									
07/24/02	16:40:10	-1.138									
07/24/02	16:41:10	-1.138									
07/24/02	16:42:10	-1.052									
07/24/02	16:43:10	-1.138									
07/24/02	16:44:10	-1.052									
07/24/02	16:45:10	-1.138									
07/24/02	16:46:10	-1.052									
07/24/02	16:47:10	-1.052									

COMANCHE AND LINSEY - NO. 6161

Date	Time	Pres (PSI)	Date	Time	Pres (PSI)	Date	Time	Pres (PSI)	Date	Time	Pres (PSI)
07/22/02	07:54:11	-0.057	07/22/02	09:00:11	54.147	07/22/02	10:06:11	53.124	07/22/02	11:12:11	51.673
07/22/02	07:55:11	-0.057	07/22/02	09:01:11	54.403	07/22/02	10:07:11	52.441	07/22/02	11:13:11	52.214
07/22/02	07:56:11	-0.057	07/22/02	09:02:11	54.688	07/22/02	10:08:11	52.100	07/22/02	11:14:11	51.531
07/22/02	07:57:11	-0.028	07/22/02	09:03:11	54.233	07/22/02	10:09:11	52.896	07/22/02	11:15:11	52.014
07/22/02	07:58:11	-0.028	07/22/02	09:04:11	54.290	07/22/02	10:10:11	52.782	07/22/02	11:16:11	51.446
07/22/02	07:59:11	-0.057	07/22/02	09:05:11	55.057	07/22/02	10:11:11	52.299	07/22/02	11:17:11	51.986
07/22/02	08:00:11	-0.057	07/22/02	09:06:11	53.920	07/22/02	10:12:11	52.470	07/22/02	11:18:11	52.100
07/22/02	08:01:11	-0.057	07/22/02	09:07:11	54.403	07/22/02	10:13:11	52.185	07/22/02	11:19:11	51.673
07/22/02	08:02:11	-0.028	07/22/02	09:08:11	54.290	07/22/02	10:14:11	52.185	07/22/02	11:20:11	51.901
07/22/02	08:03:11	-0.057	07/22/02	09:09:11	54.147	07/22/02	10:15:11	51.787	07/22/02	11:21:11	52.441
07/22/02	08:04:11	-0.057	07/22/02	09:10:11	53.152	07/22/02	10:16:11	52.299	07/22/02	11:22:11	52.157
07/22/02	08:05:11	-0.057	07/22/02	09:11:11	53.778	07/22/02	10:17:11	52.270	07/22/02	11:23:11	52.100
07/22/02	08:06:11	-0.057	07/22/02	09:12:11	53.636	07/22/02	10:18:11	52.100	07/22/02	11:24:11	51.901
07/22/02	08:07:11	-0.057	07/22/02	09:13:11	52.413	07/22/02	10:19:11	51.759	07/22/02	11:25:11	52.498
07/22/02	08:08:11	-0.057	07/22/02	09:14:11	53.124	07/22/02	10:20:11	52.384	07/22/02	11:26:11	53.266
07/22/02	08:09:11	-0.057	07/22/02	09:15:11	52.925	07/22/02	10:21:11	52.640	07/22/02	11:27:11	52.441
07/22/02	08:10:11	-0.057	07/22/02	09:16:11	52.811	07/22/02	10:22:11	52.327	07/22/02	11:28:11	52.839
07/22/02	08:11:11	-0.057	07/22/02	09:17:11	56.138	07/22/02	10:23:11	52.185	07/22/02	11:29:11	52.754
07/22/02	08:12:11	-0.057	07/22/02	09:18:11	53.692	07/22/02	10:24:11	52.299	07/22/02	11:30:11	52.498
07/22/02	08:13:11	-0.057	07/22/02	09:19:11	53.863	07/22/02	10:25:11	52.669	07/22/02	11:31:11	52.669
07/22/02	08:14:11	-0.085	07/22/02	09:20:11	54.005	07/22/02	10:26:11	52.014	07/22/02	11:32:11	52.669
07/22/02	08:15:11	-0.057	07/22/02	09:21:11	53.550	07/22/02	10:27:11	52.526	07/22/02	11:33:11	52.754
07/22/02	08:16:11	-0.028	07/22/02	09:22:11	54.546	07/22/02	10:28:11	52.043	07/22/02	11:34:11	52.498
07/22/02	08:17:11	0.000	07/22/02	09:23:11	54.858	07/22/02	10:29:11	51.986	07/22/02	11:35:11	52.868
07/22/02	08:18:11	-0.028	07/22/02	09:24:11	54.631	07/22/02	10:30:11	52.811	07/22/02	11:36:11	53.493
07/22/02	08:19:11	-0.028	07/22/02	09:25:11	54.489	07/22/02	10:31:11	51.958	07/22/02	11:37:11	52.953
07/22/02	08:20:11	-0.057	07/22/02	09:26:11	53.664	07/22/02	10:32:11	51.929	07/22/02	11:38:11	53.522
07/22/02	08:21:11	-0.057	07/22/02	09:27:11	54.091	07/22/02	10:33:11	52.185	07/22/02	11:39:11	53.408
07/22/02	08:22:11	-0.028	07/22/02	09:28:11	54.091	07/22/02	10:34:11	51.730	07/22/02	11:40:11	52.868
07/22/02	08:23:11	-0.057	07/22/02	09:29:11	53.749	07/22/02	10:35:11	52.157	07/22/02	11:41:11	54.005
07/22/02	08:24:11	0.000	07/22/02	09:30:11	53.835	07/22/02	10:36:11	51.673	07/22/02	11:42:11	54.005
07/22/02	08:25:11	-0.028	07/22/02	09:31:11	53.806	07/22/02	10:37:11	52.157	07/22/02	11:43:11	53.920
07/22/02	08:26:11	-0.028	07/22/02	09:32:11	54.176	07/22/02	10:38:11	50.820	07/22/02	11:44:11	53.863
07/22/02	08:27:11	-0.028	07/22/02	09:33:11	53.380	07/22/02	10:39:11	51.872	07/22/02	11:45:11	53.550
07/22/02	08:28:11	-0.057	07/22/02	09:34:11	53.920	07/22/02	10:40:11	51.872	07/22/02	11:46:11	54.091
07/22/02	08:29:11	-0.028	07/22/02	09:35:11	53.948	07/22/02	10:41:11	51.503	07/22/02	11:47:11	53.977
07/22/02	08:30:11	-0.057	07/22/02	09:36:11	53.579	07/22/02	10:42:11	52.299	07/22/02	11:48:11	54.375
07/22/02	08:31:11	-0.057	07/22/02	09:37:11	53.294	07/22/02	10:43:11	52.014	07/22/02	11:49:11	54.745
07/22/02	08:32:11	-0.057	07/22/02	09:38:11	53.351	07/22/02	10:44:11	52.299	07/22/02	11:50:11	54.489
07/22/02	08:33:11	-0.057	07/22/02	09:39:11	52.725	07/22/02	10:45:11	52.327	07/22/02	11:51:11	54.403
07/22/02	08:34:11	-0.028	07/22/02	09:40:11	53.465	07/22/02	10:46:11	52.071	07/22/02	11:52:11	54.517
07/22/02	08:35:11	-0.028	07/22/02	09:41:11	54.147	07/22/02	10:47:11	51.446	07/22/02	11:53:11	54.517
07/22/02	08:36:11	-0.028	07/22/02	09:42:11	53.749	07/22/02	10:48:11	51.474	07/22/02	11:54:11	53.948
07/22/02	08:37:11	0.000	07/22/02	09:43:11	53.237	07/22/02	10:49:11	51.730	07/22/02	11:55:11	54.972
07/22/02	08:38:11	-0.028	07/22/02	09:44:11	53.636	07/22/02	10:50:11	52.299	07/22/02	11:56:11	53.920
07/22/02	08:39:11	-0.057	07/22/02	09:45:11	53.692	07/22/02	10:51:11	51.901	07/22/02	11:57:11	54.403
07/22/02	08:40:11	-0.057	07/22/02	09:46:11	53.835	07/22/02	10:52:11	51.531	07/22/02	11:58:11	54.801
07/22/02	08:41:11	-0.057	07/22/02	09:47:11	54.233	07/22/02	10:53:11	51.958	07/22/02	11:59:11	54.574
07/22/02	08:42:11	-0.057	07/22/02	09:48:11	53.095	07/22/02	10:54:11	52.384	07/22/02	12:00:11	54.659
07/22/02	08:43:11	-0.028	07/22/02	09:49:11	53.408	07/22/02	10:55:11	51.616	07/22/02	12:01:11	55.057
07/22/02	08:44:11	-0.085	07/22/02	09:50:11	53.778	07/22/02	10:56:11	51.958	07/22/02	12:02:11	54.318
07/22/02	08:45:11	-0.057	07/22/02	09:51:11	53.977	07/22/02	10:57:11	51.986	07/22/02	12:03:11	54.688
07/22/02	08:46:11	-0.057	07/22/02	09:52:11	53.977	07/22/02	10:58:11	51.702	07/22/02	12:04:11	54.915
07/22/02	08:47:11	-0.085	07/22/02	09:53:11	53.152	07/22/02	10:59:11	51.702	07/22/02	12:05:11	55.057
07/22/02	08:48:11	-0.085	07/22/02	09:54:11	52.896	07/22/02	11:00:11	51.389	07/22/02	12:06:11	55.057
07/22/02	08:49:11	-0.085	07/22/02	09:55:11	53.209	07/22/02	11:01:11	51.503	07/22/02	12:07:11	55.001
07/22/02	08:50:11	-0.057	07/22/02	09:56:11	52.669	07/22/02	11:02:11	52.669	07/22/02	12:08:11	54.716
07/22/02	08:51:11	-0.085	07/22/02	09:57:11	52.754	07/22/02	11:03:11	50.735	07/22/02	12:09:11	55.143
07/22/02	08:52:11	-0.057	07/22/02	09:58:11	52.640	07/22/02	11:04:11	52.100	07/22/02	12:10:11	54.631
07/22/02	08:53:11	-0.085	07/22/02	09:59:11	52.470	07/22/02	11:05:11	51.702	07/22/02	12:11:11	54.659
07/22/02	08:54:11	54.489	07/22/02	10:00:11	53.351	07/22/02	11:06:11	51.531	07/22/02	12:12:11	54.972
07/22/02	08:55:11	55.001	07/22/02	10:01:11	53.522	07/22/02	11:07:11	51.275	07/22/02	12:13:11	54.489
07/22/02	08:56:11	54.830	07/22/02	10:02:11	52.925	07/22/02	11:08:11	51.588	07/22/02	12:14:11	53.436
07/22/02	08:57:11	54.801	07/22/02	10:03:11	52.612	07/22/02	11:09:11	51.759	07/22/02	12:15:11	53.579
07/22/02	08:58:11	54.460	07/22/02	10:04:11	52.612	07/22/02	11:10:11	52.014	07/22/02	12:16:11	53.778
07/22/02	08:59:11	54.403	07/22/02	10:05:11	52.669	07/22/02	11:11:11	51.958	07/22/02	12:17:11	54.261

COMANCHE AND LINSEY - NO. 6161 cont.

Date	Time	Pres (PSI)	Date	Time	Pres (PSI)	Date	Time	Pres (PSI)	Date	Time	Pres (PSI)
07/23/02	14:42:11	44.677	07/23/02	15:48:11	46.640	07/23/02	16:54:11	43.597	07/23/02	18:00:11	44.023
07/23/02	14:43:11	43.454	07/23/02	15:49:11	46.355	07/23/02	16:55:11	43.255	07/23/02	18:01:11	44.962
07/23/02	14:44:11	44.222	07/23/02	15:50:11	46.156	07/23/02	16:56:11	42.374	07/23/02	18:02:11	44.222
07/23/02	14:45:11	20.959	07/23/02	15:51:11	47.237	07/23/02	16:57:11	41.236	07/23/02	18:03:11	43.511
07/23/02	14:46:11	25.481	07/23/02	15:52:11	46.810	07/23/02	16:58:11	43.113	07/23/02	18:04:11	43.625
07/23/02	14:47:11	26.988	07/23/02	15:53:11	45.786	07/23/02	16:59:11	42.772	07/23/02	18:05:11	45.417
07/23/02	14:48:11	39.786	07/23/02	15:54:11	45.047	07/23/02	17:00:11	43.170	07/23/02	18:06:11	43.824
07/23/02	14:49:11	41.179	07/23/02	15:55:11	46.014	07/23/02	17:01:11	42.829	07/23/02	18:07:11	43.767
07/23/02	14:50:11	42.175	07/23/02	15:56:11	46.440	07/23/02	17:02:11	42.573	07/23/02	18:08:11	43.568
07/23/02	14:51:11	40.525	07/23/02	15:57:11	46.611	07/23/02	17:03:11	43.511	07/23/02	18:09:11	43.483
07/23/02	14:52:11	42.829	07/23/02	15:58:11	46.952	07/23/02	17:04:11	42.488	07/23/02	18:10:11	44.535
07/23/02	14:53:11	42.601	07/23/02	15:59:11	45.616	07/23/02	17:05:11	42.800	07/23/02	18:11:11	43.511
07/23/02	14:54:11	41.350	07/23/02	16:00:11	45.388	07/23/02	17:06:11	41.833	07/23/02	18:12:11	43.625
07/23/02	14:55:11	41.947	07/23/02	16:01:11	45.331	07/23/02	17:07:11	41.606	07/23/02	18:13:11	44.279
07/23/02	14:56:11	42.658	07/23/02	16:02:11	44.819	07/23/02	17:08:11	42.800	07/23/02	18:14:11	44.450
07/23/02	14:57:11	41.833	07/23/02	16:03:11	45.161	07/23/02	17:09:11	40.923	07/23/02	18:15:11	43.142
07/23/02	14:58:11	42.488	07/23/02	16:04:11	44.791	07/23/02	17:10:11	49.796	07/23/02	18:16:11	43.341
07/23/02	14:59:11	43.312	07/23/02	16:05:11	45.132	07/23/02	17:11:11	44.620	07/23/02	18:17:11	45.047
07/23/02	15:00:11	42.516	07/23/02	16:06:11	45.331	07/23/02	17:12:11	45.246	07/23/02	18:18:11	43.312
07/23/02	15:01:11	42.232	07/23/02	16:07:11	44.677	07/23/02	17:13:11	44.848	07/23/02	18:19:11	45.388
07/23/02	15:02:11	42.886	07/23/02	16:08:11	43.739	07/23/02	17:14:11	44.194	07/23/02	18:20:11	44.564
07/23/02	15:03:11	42.743	07/23/02	16:09:11	44.393	07/23/02	17:15:11	44.165	07/23/02	18:21:11	43.796
07/23/02	15:04:11	42.061	07/23/02	16:10:11	45.985	07/23/02	17:16:11	45.246	07/23/02	18:22:11	42.971
07/23/02	15:05:11	41.663	07/23/02	16:11:11	44.308	07/23/02	17:17:11	44.819	07/23/02	18:23:11	43.966
07/23/02	15:06:11	41.890	07/23/02	16:12:11	45.360	07/23/02	17:18:11	44.819	07/23/02	18:24:11	43.341
07/23/02	15:07:11	42.118	07/23/02	16:13:11	43.966	07/23/02	17:19:11	44.450	07/23/02	18:25:11	43.142
07/23/02	15:08:11	41.833	07/23/02	16:14:11	44.393	07/23/02	17:20:11	44.933	07/23/02	18:26:11	44.876
07/23/02	15:09:11	42.032	07/23/02	16:15:11	45.758	07/23/02	17:21:11	45.246	07/23/02	18:27:11	44.251
07/23/02	15:10:11	42.772	07/23/02	16:16:11	45.815	07/23/02	17:22:11	44.620	07/23/02	18:28:11	44.222
07/23/02	15:11:11	42.004	07/23/02	16:17:11	45.019	07/23/02	17:23:11	42.601	07/23/02	18:29:11	43.056
07/23/02	15:12:11	42.232	07/23/02	16:18:11	45.786	07/23/02	17:24:11	45.075	07/23/02	18:30:11	44.137
07/23/02	15:13:11	43.653	07/23/02	16:19:11	45.019	07/23/02	17:25:11	45.047	07/23/02	18:31:11	43.966
07/23/02	15:14:11	41.947	07/23/02	16:20:11	45.559	07/23/02	17:26:11	45.587	07/23/02	18:32:11	43.113
07/23/02	15:15:11	42.175	07/23/02	16:21:11	45.218	07/23/02	17:27:11	42.743	07/23/02	18:33:11	44.564
07/23/02	15:16:11	42.544	07/23/02	16:22:11	45.673	07/23/02	17:28:11	44.450	07/23/02	18:34:11	43.796
07/23/02	15:17:11	41.777	07/23/02	16:23:11	44.791	07/23/02	17:29:11	43.853	07/23/02	18:35:11	43.881
07/23/02	15:18:11	42.829	07/23/02	16:24:11	26.818	07/23/02	17:30:11	44.137	07/23/02	18:36:11	42.886
07/23/02	15:19:11	43.710	07/23/02	16:25:11	48.573	07/23/02	17:31:11	43.341	07/23/02	18:37:11	44.052
07/23/02	15:20:11	49.626	07/23/02	16:26:11	46.668	07/23/02	17:32:11	43.881	07/23/02	18:38:11	44.222
07/23/02	15:21:11	44.848	07/23/02	16:27:11	45.644	07/23/02	17:33:11	43.597	07/23/02	18:39:11	45.303
07/23/02	15:22:11	45.673	07/23/02	16:28:11	45.303	07/23/02	17:34:11	43.710	07/23/02	18:40:11	44.734
07/23/02	15:23:11	44.848	07/23/02	16:29:11	45.445	07/23/02	17:35:11	43.995	07/23/02	18:41:11	43.625
07/23/02	15:24:11	46.185	07/23/02	16:30:11	44.620	07/23/02	17:36:11	43.881	07/23/02	18:42:11	43.995
07/23/02	15:25:11	46.384	07/23/02	16:31:11	45.929	07/23/02	17:37:11	44.222	07/23/02	18:43:11	44.222
07/23/02	15:26:11	46.526	07/23/02	16:32:11	45.929	07/23/02	17:38:11	43.909	07/23/02	18:44:11	44.194
07/23/02	15:27:11	45.900	07/23/02	16:33:11	45.104	07/23/02	17:39:11	44.137	07/23/02	18:45:11	44.564
07/23/02	15:28:11	46.270	07/23/02	16:34:11	45.218	07/23/02	17:40:11	43.142	07/23/02	18:46:11	45.104
07/23/02	15:29:11	46.128	07/23/02	16:35:11	45.218	07/23/02	17:41:11	44.393	07/23/02	18:47:11	44.222
07/23/02	15:30:11	46.810	07/23/02	16:36:11	45.445	07/23/02	17:42:11	43.056	07/23/02	18:48:11	44.194
07/23/02	15:31:11	45.701	07/23/02	16:37:11	45.929	07/23/02	17:43:11	43.881	07/23/02	18:49:11	44.620
07/23/02	15:32:11	45.815	07/23/02	16:38:11	45.900	07/23/02	17:44:11	44.194	07/23/02	18:50:11	43.483
07/23/02	15:33:11	46.270	07/23/02	16:39:11	45.644	07/23/02	17:45:11	43.710	07/23/02	18:51:11	44.478
07/23/02	15:34:11	45.474	07/23/02	16:40:11	45.616	07/23/02	17:46:11	44.109	07/23/02	18:52:11	43.995
07/23/02	15:35:11	46.640	07/23/02	16:41:11	44.962	07/23/02	17:47:11	44.734	07/23/02	18:53:11	43.170
07/23/02	15:36:11	45.673	07/23/02	16:42:11	35.264	07/23/02	17:48:11	43.796	07/23/02	18:54:11	44.421
07/23/02	15:37:11	44.137	07/23/02	16:43:11	26.505	07/23/02	17:49:11	44.962	07/23/02	18:55:11	44.308
07/23/02	15:38:11	45.275	07/23/02	16:44:11	29.263	07/23/02	17:50:11	44.990	07/23/02	18:56:11	44.450
07/23/02	15:39:11	46.497	07/23/02	16:45:11	29.349	07/23/02	17:51:11	45.275	07/23/02	18:57:11	42.488
07/23/02	15:40:11	45.786	07/23/02	16:46:11	28.666	07/23/02	17:52:11	44.080	07/23/02	18:58:11	43.056
07/23/02	15:41:11	44.535	07/23/02	16:47:11	27.927	07/23/02	17:53:11	44.962	07/23/02	18:59:11	44.364
07/23/02	15:42:11	45.189	07/23/02	16:48:11	41.777	07/23/02	17:54:11	44.478	07/23/02	19:00:11	43.710
07/23/02	15:43:11	45.360	07/23/02	16:49:11	46.185	07/23/02	17:55:11	42.743	07/23/02	19:01:11	43.312
07/23/02	15:44:11	45.872	07/23/02	16:50:11	43.056	07/23/02	17:56:11	45.161	07/23/02	19:02:11	44.251
07/23/02	15:45:11	46.611	07/23/02	16:51:11	42.544	07/23/02	17:57:11	43.056	07/23/02	19:03:11	44.393
07/23/02	15:46:11	47.123	07/23/02	16:52:11	42.658	07/23/02	17:58:11	44.137	07/23/02	19:04:11	44.535
07/23/02	15:47:11	46.554	07/23/02	16:53:11	43.625	07/23/02	17:59:11	44.308	07/23/02	19:05:11	43.881

COMANCHE AND LINSEY - NO. 6161 cont.

Date	Time	Pres (PSI)	Date	Time	Pres (PSI)	Date	Time	Pres (PSI)	Date	Time	Pres (PSI)
07/23/02	19:06:11	44.592	07/23/02	20:12:11	43.398	07/23/02	21:18:11	42.971	07/23/02	22:24:11	43.853
07/23/02	19:07:11	44.450	07/23/02	20:13:11	42.743	07/23/02	21:19:11	43.113	07/23/02	22:25:11	44.791
07/23/02	19:08:11	44.194	07/23/02	20:14:11	43.198	07/23/02	21:20:11	43.540	07/23/02	22:26:11	43.995
07/23/02	19:09:11	44.052	07/23/02	20:15:11	42.971	07/23/02	21:21:11	42.943	07/23/02	22:27:11	44.620
07/23/02	19:10:11	44.535	07/23/02	20:16:11	44.023	07/23/02	21:22:11	43.398	07/23/02	22:28:11	44.535
07/23/02	19:11:11	45.047	07/23/02	20:17:11	42.488	07/23/02	21:23:11	43.312	07/23/02	22:29:11	43.995
07/23/02	19:12:11	44.137	07/23/02	20:18:11	42.914	07/23/02	21:24:11	43.284	07/23/02	22:30:11	44.819
07/23/02	19:13:11	43.312	07/23/02	20:19:11	43.028	07/23/02	21:25:11	43.198	07/23/02	22:31:11	44.763
07/23/02	19:14:11	44.137	07/23/02	20:20:11	44.279	07/23/02	21:26:11	43.597	07/23/02	22:32:11	44.421
07/23/02	19:15:11	43.597	07/23/02	20:21:11	43.085	07/23/02	21:27:11	43.056	07/23/02	22:33:11	44.165
07/23/02	19:16:11	43.966	07/23/02	20:22:11	44.194	07/23/02	21:28:11	42.999	07/23/02	22:34:11	43.739
07/23/02	19:17:11	44.450	07/23/02	20:23:11	42.943	07/23/02	21:29:11	43.398	07/23/02	22:35:11	44.990
07/23/02	19:18:11	44.251	07/23/02	20:24:11	42.488	07/23/02	21:30:11	43.085	07/23/02	22:36:11	44.620
07/23/02	19:19:11	44.450	07/23/02	20:25:11	44.137	07/23/02	21:31:11	43.028	07/23/02	22:37:11	44.251
07/23/02	19:20:11	44.137	07/23/02	20:26:11	43.454	07/23/02	21:32:11	43.113	07/23/02	22:38:11	45.019
07/23/02	19:21:11	44.819	07/23/02	20:27:11	43.369	07/23/02	21:33:11	43.312	07/23/02	22:39:11	43.796
07/23/02	19:22:11	43.568	07/23/02	20:28:11	43.085	07/23/02	21:34:11	42.971	07/23/02	22:40:11	45.019
07/23/02	19:23:11	44.620	07/23/02	20:29:11	42.886	07/23/02	21:35:11	43.881	07/23/02	22:41:11	44.535
07/23/02	19:24:11	44.165	07/23/02	20:30:11	44.222	07/23/02	21:36:11	43.824	07/23/02	22:42:11	44.905
07/23/02	19:25:11	43.653	07/23/02	20:31:11	42.687	07/23/02	21:37:11	43.483	07/23/02	22:43:11	45.502
07/23/02	19:26:11	44.109	07/23/02	20:32:11	42.658	07/23/02	21:38:11	43.170	07/23/02	22:44:11	44.137
07/23/02	19:27:11	43.426	07/23/02	20:33:11	43.312	07/23/02	21:39:11	44.251	07/23/02	22:45:11	44.194
07/23/02	19:28:11	43.739	07/23/02	20:34:11	42.829	07/23/02	21:40:11	43.853	07/23/02	22:46:11	45.701
07/23/02	19:29:11	43.142	07/23/02	20:35:11	43.341	07/23/02	21:41:11	43.398	07/23/02	22:47:11	44.535
07/23/02	19:30:11	44.251	07/23/02	20:36:11	43.113	07/23/02	21:42:11	43.142	07/23/02	22:48:11	44.848
07/23/02	19:31:11	43.597	07/23/02	20:37:11	43.739	07/23/02	21:43:11	44.052	07/23/02	22:49:11	44.791
07/23/02	19:32:11	44.222	07/23/02	20:38:11	43.170	07/23/02	21:44:11	43.483	07/23/02	22:50:11	45.929
07/23/02	19:33:11	44.109	07/23/02	20:39:11	44.364	07/23/02	21:45:11	43.853	07/23/02	22:51:11	45.132
07/23/02	19:34:11	43.881	07/23/02	20:40:11	44.137	07/23/02	21:46:11	44.308	07/23/02	22:52:11	45.929
07/23/02	19:35:11	43.284	07/23/02	20:41:11	43.625	07/23/02	21:47:11	43.312	07/23/02	22:53:11	45.644
07/23/02	19:36:11	43.540	07/23/02	20:42:11	44.592	07/23/02	21:48:11	21.756	07/23/02	22:54:11	45.644
07/23/02	19:37:11	43.568	07/23/02	20:43:11	44.393	07/23/02	21:49:11	24.002	07/23/02	22:55:11	46.014
07/23/02	19:38:11	43.540	07/23/02	20:44:11	43.966	07/23/02	21:50:11	25.566	07/23/02	22:56:11	45.360
07/23/02	19:39:11	44.080	07/23/02	20:45:11	44.308	07/23/02	21:51:11	24.969	07/23/02	22:57:11	45.417
07/23/02	19:40:11	43.966	07/23/02	20:46:11	43.341	07/23/02	21:52:11	24.713	07/23/02	22:58:11	45.474
07/23/02	19:41:11	44.052	07/23/02	20:47:11	43.483	07/23/02	21:53:11	24.088	07/23/02	22:59:11	45.530
07/23/02	19:42:11	43.597	07/23/02	20:48:11	43.995	07/23/02	21:54:11	24.002	07/23/02	23:00:11	45.360
07/23/02	19:43:11	44.677	07/23/02	20:49:11	43.511	07/23/02	21:55:11	23.803	07/23/02	23:01:11	45.189
07/23/02	19:44:11	43.796	07/23/02	20:50:11	44.478	07/23/02	21:56:11	23.917	07/23/02	23:02:11	45.331
07/23/02	19:45:11	44.450	07/23/02	20:51:11	42.971	07/23/02	21:57:11	23.490	07/23/02	23:03:11	44.478
07/23/02	19:46:11	44.507	07/23/02	20:52:11	42.288	07/23/02	21:58:11	32.733	07/23/02	23:04:11	44.876
07/23/02	19:47:11	43.966	07/23/02	20:53:11	43.881	07/23/02	21:59:11	40.070	07/23/02	23:05:11	45.616
07/23/02	19:48:11	42.971	07/23/02	20:54:11	44.279	07/23/02	22:00:11	40.696	07/23/02	23:06:11	44.876
07/23/02	19:49:11	43.227	07/23/02	20:55:11	44.080	07/23/02	22:01:11	40.468	07/23/02	23:07:11	44.478
07/23/02	19:50:11	43.369	07/23/02	20:56:11	43.198	07/23/02	22:02:11	40.611	07/23/02	23:08:11	44.478
07/23/02	19:51:11	43.682	07/23/02	20:57:11	44.194	07/23/02	22:03:11	39.928	07/23/02	23:09:11	45.900
07/23/02	19:52:11	44.052	07/23/02	20:58:11	43.227	07/23/02	22:04:11	39.701	07/23/02	23:10:11	45.815
07/23/02	19:53:11	43.056	07/23/02	20:59:11	43.142	07/23/02	22:05:11	40.326	07/23/02	23:11:11	45.104
07/23/02	19:54:11	44.393	07/23/02	21:00:11	42.402	07/23/02	22:06:11	40.099	07/23/02	23:12:11	46.014
07/23/02	19:55:11	43.767	07/23/02	21:01:11	42.943	07/23/02	22:07:11	40.298	07/23/02	23:13:11	46.185
07/23/02	19:56:11	43.056	07/23/02	21:02:11	41.492	07/23/02	22:08:11	40.184	07/23/02	23:14:11	46.014
07/23/02	19:57:11	43.284	07/23/02	21:03:11	41.407	07/23/02	22:09:11	40.753	07/23/02	23:15:11	45.189
07/23/02	19:58:11	43.710	07/23/02	21:04:11	42.601	07/23/02	22:10:11	41.122	07/23/02	23:16:11	46.355
07/23/02	19:59:11	43.056	07/23/02	21:05:11	42.630	07/23/02	22:11:11	41.720	07/23/02	23:17:11	45.616
07/23/02	20:00:11	43.483	07/23/02	21:06:11	42.829	07/23/02	22:12:11	40.269	07/23/02	23:18:11	44.620
07/23/02	20:01:11	43.483	07/23/02	21:07:11	42.175	07/23/02	22:13:11	39.445	07/23/02	23:19:11	45.957
07/23/02	20:02:11	43.909	07/23/02	21:08:11	42.829	07/23/02	22:14:11	40.269	07/23/02	23:20:11	45.360
07/23/02	20:03:11	43.398	07/23/02	21:09:11	43.113	07/23/02	22:15:11	39.956	07/23/02	23:21:11	45.872
07/23/02	20:04:11	43.341	07/23/02	21:10:11	42.886	07/23/02	22:16:11	40.241	07/23/02	23:22:11	45.161
07/23/02	20:05:11	44.507	07/23/02	21:11:11	41.748	07/23/02	22:17:11	41.606	07/23/02	23:23:11	45.929
07/23/02	20:06:11	43.227	07/23/02	21:12:11	42.288	07/23/02	22:18:11	41.094	07/23/02	23:24:11	46.099
07/23/02	20:07:11	43.625	07/23/02	21:13:11	42.943	07/23/02	22:19:11	41.094	07/23/02	23:25:11	46.185
07/23/02	20:08:11	44.222	07/23/02	21:14:11	42.516	07/23/02	22:20:11	48.801	07/23/02	23:26:11	45.929
07/23/02	20:09:11	43.625	07/23/02	21:15:11	42.772	07/23/02	22:21:11	43.483	07/23/02	23:27:11	46.298
07/23/02	20:10:11	44.052	07/23/02	21:16:11	42.089	07/23/02	22:22:11	44.535	07/23/02	23:28:11	46.213
07/23/02	20:11:11	43.881	07/23/02	21:17:11	43.227	07/23/02	22:23:11	43.739	07/23/02	23:29:11	46.554

COMANCHE AND LINSEY - NO. 6161 cont.

Date	Time	Pres (PSI)
07/23/02	23:30:11	46.298
07/23/02	23:31:11	46.014
07/23/02	23:32:11	45.104
07/23/02	23:33:11	46.355
07/23/02	23:34:11	45.331
07/23/02	23:35:11	46.526
07/23/02	23:36:11	45.872
07/23/02	23:37:11	46.185
07/23/02	23:38:11	46.270
07/23/02	23:39:11	46.753
07/23/02	23:40:11	46.839
07/23/02	23:41:11	46.611
07/23/02	23:42:11	47.180
07/23/02	23:43:11	47.038
07/23/02	23:44:11	46.327
07/23/02	23:45:11	47.237
07/23/02	23:46:11	46.952
07/23/02	23:47:11	47.095
07/23/02	23:48:11	47.095
07/23/02	23:49:11	47.095
07/23/02	23:50:11	46.753
07/23/02	23:51:11	46.440
07/23/02	23:52:11	47.407
07/23/02	23:53:11	47.180
07/23/02	23:54:11	47.578
07/23/02	23:55:11	46.611
07/23/02	23:56:11	48.232
07/23/02	23:57:11	47.436
07/23/02	23:58:11	47.265
07/23/02	23:59:11	47.351
07/24/02	00:00:11	47.834
07/24/02	00:01:11	47.066
07/24/02	00:02:11	46.924
07/24/02	00:03:11	47.237
07/24/02	00:04:11	47.976
07/24/02	00:05:11	48.175
07/24/02	00:06:11	47.606
07/24/02	00:07:11	47.493
07/24/02	00:08:11	48.147
07/24/02	00:09:11	47.606
07/24/02	00:10:11	47.578
07/24/02	00:11:11	48.175
07/24/02	00:12:11	47.749
07/24/02	00:13:11	47.351
07/24/02	00:14:11	47.436
07/24/02	00:15:11	48.005
07/24/02	00:16:11	47.777
07/24/02	00:17:11	48.062
07/24/02	00:18:11	47.578
07/24/02	00:19:11	48.090
07/24/02	00:20:11	48.261
07/24/02	00:21:11	48.261
07/24/02	00:22:11	47.806
07/24/02	00:23:11	47.407
07/24/02	00:24:11	48.232
07/24/02	00:25:11	47.976
07/24/02	00:26:11	48.090
07/24/02	00:27:11	48.005
07/24/02	00:28:11	48.488
07/24/02	00:29:11	48.772
07/24/02	00:30:11	48.829
07/24/02	00:31:11	48.545
07/24/02	00:32:11	48.460
07/24/02	00:33:11	48.659
07/24/02	00:34:11	48.545
07/24/02	00:35:11	48.772

Date	Time	Pres (PSI)
07/24/02	00:36:11	48.573
07/24/02	00:37:11	48.147
07/24/02	00:38:11	48.687
07/24/02	00:39:11	48.317
07/24/02	00:40:11	48.915
07/24/02	00:41:11	48.289
07/24/02	00:42:11	48.005
07/24/02	00:43:11	48.431
07/24/02	00:44:11	48.261
07/24/02	00:45:11	48.346
07/24/02	00:46:11	48.858
07/24/02	00:47:11	48.801
07/24/02	00:48:11	48.232
07/24/02	00:49:11	49.028
07/24/02	00:50:11	48.772
07/24/02	00:51:11	48.573
07/24/02	00:52:11	48.972
07/24/02	00:53:11	48.858
07/24/02	00:54:11	48.915
07/24/02	00:55:11	47.834
07/24/02	00:56:11	48.972
07/24/02	00:57:11	47.834
07/24/02	00:58:11	48.972
07/24/02	00:59:11	48.744
07/24/02	01:00:11	48.232
07/24/02	01:01:11	48.403
07/24/02	01:02:11	48.261
07/24/02	01:03:11	48.488
07/24/02	01:04:11	48.403
07/24/02	01:05:11	48.829
07/24/02	01:06:11	49.142
07/24/02	01:07:11	48.204
07/24/02	01:08:11	49.057
07/24/02	01:09:11	47.919
07/24/02	01:10:11	48.744
07/24/02	01:11:11	48.374
07/24/02	01:12:11	48.602
07/24/02	01:13:11	47.692
07/24/02	01:14:11	48.346
07/24/02	01:15:11	37.340
07/24/02	01:16:11	38.136
07/24/02	01:17:11	37.966
07/24/02	01:18:11	48.744
07/24/02	01:19:11	48.573
07/24/02	01:20:11	46.526
07/24/02	01:21:11	48.460
07/24/02	01:22:11	47.009
07/24/02	01:23:11	48.033
07/24/02	01:24:11	48.431
07/24/02	01:25:11	47.493
07/24/02	01:26:11	47.635
07/24/02	01:27:11	48.147
07/24/02	01:28:11	48.204
07/24/02	01:29:11	48.175
07/24/02	01:30:11	48.317
07/24/02	01:31:11	48.062
07/24/02	01:32:11	47.550
07/24/02	01:33:11	47.322
07/24/02	01:34:11	46.753
07/24/02	01:35:11	47.578
07/24/02	01:36:11	48.602
07/24/02	01:37:11	47.948
07/24/02	01:38:11	47.521
07/24/02	01:39:11	47.578
07/24/02	01:40:11	47.777
07/24/02	01:41:11	47.834

Date	Time	Pres (PSI)
07/24/02	01:42:11	47.692
07/24/02	01:43:11	47.407
07/24/02	01:44:11	47.948
07/24/02	01:45:11	47.151
07/24/02	01:46:11	48.090
07/24/02	01:47:11	47.578
07/24/02	01:48:11	47.066
07/24/02	01:49:11	47.777
07/24/02	01:50:11	47.151
07/24/02	01:51:11	47.635
07/24/02	01:52:11	47.436
07/24/02	01:53:11	47.180
07/24/02	01:54:11	47.834
07/24/02	01:55:11	48.090
07/24/02	01:56:11	48.005
07/24/02	01:57:11	47.891
07/24/02	01:58:11	48.204
07/24/02	01:59:11	48.232
07/24/02	02:00:11	48.204
07/24/02	02:01:11	49.455
07/24/02	02:02:11	48.317
07/24/02	02:03:11	49.142
07/24/02	02:04:11	48.033
07/24/02	02:05:11	48.829
07/24/02	02:06:11	48.801
07/24/02	02:07:11	48.488
07/24/02	02:08:11	48.602
07/24/02	02:09:11	47.891
07/24/02	02:10:11	48.744
07/24/02	02:11:11	48.062
07/24/02	02:12:11	48.374
07/24/02	02:13:11	48.289
07/24/02	02:14:11	48.517
07/24/02	02:15:11	47.891
07/24/02	02:16:11	35.349
07/24/02	02:17:11	39.729
07/24/02	02:18:11	38.904
07/24/02	02:19:11	40.269
07/24/02	02:20:11	40.269
07/24/02	02:21:11	39.871
07/24/02	02:22:11	40.440
07/24/02	02:23:11	40.411
07/24/02	02:24:11	40.667
07/24/02	02:25:11	39.757
07/24/02	02:26:11	40.184
07/24/02	02:27:11	48.147
07/24/02	02:28:11	49.398
07/24/02	02:29:11	46.753
07/24/02	02:30:11	48.261
07/24/02	02:31:11	47.919
07/24/02	02:32:11	47.606
07/24/02	02:33:11	47.919
07/24/02	02:34:11	47.493
07/24/02	02:35:11	47.351
07/24/02	02:36:11	48.232
07/24/02	02:37:11	47.663
07/24/02	02:38:11	47.948
07/24/02	02:39:11	47.806
07/24/02	02:40:11	47.521
07/24/02	02:41:11	47.749
07/24/02	02:42:11	47.834
07/24/02	02:43:11	48.090
07/24/02	02:44:11	48.289
07/24/02	02:45:11	47.749
07/24/02	02:46:11	48.062
07/24/02	02:47:11	48.062

Date	Time	Pres (PSI)
07/24/02	02:48:11	48.033
07/24/02	02:49:11	47.919
07/24/02	02:50:11	47.976
07/24/02	02:51:11	47.834
07/24/02	02:52:11	47.806
07/24/02	02:53:11	47.407
07/24/02	02:54:11	47.407
07/24/02	02:55:11	47.749
07/24/02	02:56:11	47.834
07/24/02	02:57:11	47.180
07/24/02	02:58:11	50.393
07/24/02	02:59:11	48.147
07/24/02	03:00:11	48.090
07/24/02	03:01:11	48.488
07/24/02	03:02:11	48.289
07/24/02	03:03:11	48.744
07/24/02	03:04:11	48.602
07/24/02	03:05:11	48.431
07/24/02	03:06:11	48.801
07/24/02	03:07:11	48.317
07/24/02	03:08:11	48.232
07/24/02	03:09:11	48.175
07/24/02	03:10:11	48.005
07/24/02	03:11:11	49.028
07/24/02	03:12:11	48.801
07/24/02	03:13:11	48.317
07/24/02	03:14:11	49.142
07/24/02	03:15:11	48.687
07/24/02	03:16:11	47.862
07/24/02	03:17:11	48.801
07/24/02	03:18:11	48.346
07/24/02	03:19:11	48.488
07/24/02	03:20:11	48.118
07/24/02	03:21:11	48.886
07/24/02	03:22:11	48.090
07/24/02	03:23:11	48.261
07/24/02	03:24:11	48.090
07/24/02	03:25:11	48.261
07/24/02	03:26:11	48.687
07/24/02	03:27:11	48.431
07/24/02	03:28:11	48.317
07/24/02	03:29:11	47.862
07/24/02	03:30:11	48.744
07/24/02	03:31:11	48.630
07/24/02	03:32:11	48.346
07/24/02	03:33:11	48.915
07/24/02	03:34:11	48.886
07/24/02	03:35:11	48.289
07/24/02	03:36:11	48.915
07/24/02	03:37:11	48.431
07/24/02	03:38:11	48.488
07/24/02	03:39:11	48.943
07/24/02	03:40:11	48.659
07/24/02	03:41:11	48.829
07/24/02	03:42:11	48.744
07/24/02	03:43:11	48.886
07/24/02	03:44:11	48.545
07/24/02	03:45:11	48.716
07/24/02	03:46:11	48.573
07/24/02	03:47:11	48.232
07/24/02	03:48:11	49.142
07/24/02	03:49:11	48.858
07/24/02	03:50:11	48.545
07/24/02	03:51:11	48.488
07/24/02	03:52:11	48.687
07/24/02	03:53:11	48.659

COMANCHE AND LINSEY - NO. 6161 cont.

Date	Time	Pres (PSI)
07/24/02	03:54:11	48.630
07/24/02	03:55:11	37.369
07/24/02	03:56:11	40.099
07/24/02	03:57:11	39.871
07/24/02	03:58:11	47.919
07/24/02	03:59:11	48.147
07/24/02	04:00:11	45.900
07/24/02	04:01:11	47.351
07/24/02	04:02:11	46.981
07/24/02	04:03:11	46.696
07/24/02	04:04:11	46.839
07/24/02	04:05:11	46.981
07/24/02	04:06:11	45.929
07/24/02	04:07:11	45.900
07/24/02	04:08:11	46.554
07/24/02	04:09:11	46.497
07/24/02	04:10:11	46.469
07/24/02	04:11:11	46.185
07/24/02	04:12:11	46.327
07/24/02	04:13:11	46.583
07/24/02	04:14:11	46.839
07/24/02	04:15:11	46.924
07/24/02	04:16:11	45.929
07/24/02	04:17:11	46.156
07/24/02	04:18:11	45.929
07/24/02	04:19:11	46.412
07/24/02	04:20:11	46.753
07/24/02	04:21:11	46.440
07/24/02	04:22:11	46.440
07/24/02	04:23:11	46.668
07/24/02	04:24:11	46.839
07/24/02	04:25:11	46.497
07/24/02	04:26:11	46.526
07/24/02	04:27:11	46.668
07/24/02	04:28:11	46.270
07/24/02	04:29:11	45.843
07/24/02	04:30:11	45.929
07/24/02	04:31:11	46.298
07/24/02	04:32:11	45.786
07/24/02	04:33:11	45.929
07/24/02	04:34:11	46.099
07/24/02	04:35:11	47.151
07/24/02	04:36:11	46.526
07/24/02	04:37:11	46.952
07/24/02	04:38:11	47.095
07/24/02	04:39:11	47.407
07/24/02	04:40:11	47.351
07/24/02	04:41:11	47.095
07/24/02	04:42:11	46.981
07/24/02	04:43:11	47.038
07/24/02	04:44:11	46.810
07/24/02	04:45:11	47.180
07/24/02	04:46:11	47.066
07/24/02	04:47:11	46.782
07/24/02	04:48:11	46.611
07/24/02	04:49:11	46.696
07/24/02	04:50:11	46.924
07/24/02	04:51:11	46.497
07/24/02	04:52:11	46.611
07/24/02	04:53:11	46.810
07/24/02	04:54:11	46.327
07/24/02	04:55:11	47.180
07/24/02	04:56:11	46.355
07/24/02	04:57:11	46.611
07/24/02	04:58:11	46.412
07/24/02	04:59:11	46.156

Date	Time	Pres (PSI)
07/24/02	05:00:11	46.099
07/24/02	05:01:11	45.758
07/24/02	05:02:11	44.706
07/24/02	05:03:11	44.535
07/24/02	05:04:11	44.620
07/24/02	05:05:11	44.222
07/24/02	05:06:11	44.620
07/24/02	05:07:11	44.393
07/24/02	05:08:11	44.905
07/24/02	05:09:11	44.507
07/24/02	05:10:11	44.990
07/24/02	05:11:11	45.075
07/24/02	05:12:11	44.962
07/24/02	05:13:11	45.616
07/24/02	05:14:11	45.132
07/24/02	05:15:11	45.388
07/24/02	05:16:11	44.876
07/24/02	05:17:11	44.905
07/24/02	05:18:11	46.725
07/24/02	05:19:11	48.573
07/24/02	05:20:11	46.924
07/24/02	05:21:11	48.090
07/24/02	05:22:11	48.090
07/24/02	05:23:11	47.464
07/24/02	05:24:11	48.118
07/24/02	05:25:11	47.720
07/24/02	05:26:11	47.294
07/24/02	05:27:11	47.436
07/24/02	05:28:11	47.806
07/24/02	05:29:11	47.919
07/24/02	05:30:11	48.232
07/24/02	05:31:11	47.493
07/24/02	05:32:11	48.232
07/24/02	05:33:11	47.692
07/24/02	05:34:11	47.123
07/24/02	05:35:11	47.578
07/24/02	05:36:11	47.550
07/24/02	05:37:11	47.862
07/24/02	05:38:11	47.436
07/24/02	05:39:11	47.663
07/24/02	05:40:11	47.663
07/24/02	05:41:11	47.151
07/24/02	05:42:11	47.038
07/24/02	05:43:11	48.175
07/24/02	05:44:11	48.005
07/24/02	05:45:11	46.839
07/24/02	05:46:11	47.521
07/24/02	05:47:11	48.090
07/24/02	05:48:11	47.436
07/24/02	05:49:11	47.862
07/24/02	05:50:11	48.573
07/24/02	05:51:11	47.663
07/24/02	05:52:11	48.289
07/24/02	05:53:11	47.322
07/24/02	05:54:11	47.151
07/24/02	05:55:11	47.663
07/24/02	05:56:11	47.578
07/24/02	05:57:11	47.436
07/24/02	05:58:11	47.749
07/24/02	05:59:11	45.929
07/24/02	06:00:11	47.407
07/24/02	06:01:11	46.924
07/24/02	06:02:11	47.322
07/24/02	06:03:11	46.668
07/24/02	06:04:11	47.009
07/24/02	06:05:11	47.265

Date	Time	Pres (PSI)
07/24/02	06:06:11	46.611
07/24/02	06:07:11	46.583
07/24/02	06:08:11	46.554
07/24/02	06:09:11	46.753
07/24/02	06:10:11	46.924
07/24/02	06:11:11	46.896
07/24/02	06:12:11	46.924
07/24/02	06:13:11	46.839
07/24/02	06:14:11	46.924
07/24/02	06:15:11	46.213
07/24/02	06:16:11	46.611
07/24/02	06:17:11	46.668
07/24/02	06:18:11	46.355
07/24/02	06:19:11	47.948
07/24/02	06:20:11	47.521
07/24/02	06:21:11	46.753
07/24/02	06:22:11	46.156
07/24/02	06:23:11	46.924
07/24/02	06:24:11	46.981
07/24/02	06:25:11	46.668
07/24/02	06:26:11	46.839
07/24/02	06:27:11	46.099
07/24/02	06:28:11	46.355
07/24/02	06:29:11	46.668
07/24/02	06:30:11	47.351
07/24/02	06:31:11	46.071
07/24/02	06:32:11	46.611
07/24/02	06:33:11	45.758
07/24/02	06:34:11	46.440
07/24/02	06:35:11	47.521
07/24/02	06:36:11	45.786
07/24/02	06:37:11	46.298
07/24/02	06:38:11	46.896
07/24/02	06:39:11	46.270
07/24/02	06:40:11	46.270
07/24/02	06:41:11	46.611
07/24/02	06:42:11	46.611
07/24/02	06:43:11	46.099
07/24/02	06:44:11	46.839
07/24/02	06:45:11	46.867
07/24/02	06:46:11	47.379
07/24/02	06:47:11	46.497
07/24/02	06:48:11	46.952
07/24/02	06:49:11	47.351
07/24/02	06:50:11	46.924
07/24/02	06:51:11	45.758
07/24/02	06:52:11	46.355
07/24/02	06:53:11	46.042
07/24/02	06:54:11	46.355
07/24/02	06:55:11	46.753
07/24/02	06:56:11	46.753
07/24/02	06:57:11	46.327
07/24/02	06:58:11	47.322
07/24/02	06:59:11	46.185
07/24/02	07:00:11	45.957
07/24/02	07:01:11	46.099
07/24/02	07:02:11	47.009
07/24/02	07:03:11	46.241
07/24/02	07:04:11	46.355
07/24/02	07:05:11	46.270
07/24/02	07:06:11	44.962
07/24/02	07:07:11	44.620
07/24/02	07:08:11	45.786
07/24/02	07:09:11	44.393
07/24/02	07:10:11	45.360
07/24/02	07:11:11	43.398

Date	Time	Pres (PSI)
07/24/02	07:12:11	45.189
07/24/02	07:13:11	45.275
07/24/02	07:14:11	44.592
07/24/02	07:15:11	44.962
07/24/02	07:16:11	44.279
07/24/02	07:17:11	44.052
07/24/02	07:18:11	43.312
07/24/02	07:19:11	43.995
07/24/02	07:20:11	44.251
07/24/02	07:21:11	43.966
07/24/02	07:22:11	43.568
07/24/02	07:23:11	44.791
07/24/02	07:24:11	44.194
07/24/02	07:25:11	43.540
07/24/02	07:26:11	45.161
07/24/02	07:27:11	44.763
07/24/02	07:28:11	45.360
07/24/02	07:29:11	45.161
07/24/02	07:30:11	44.620
07/24/02	07:31:11	44.763
07/24/02	07:32:11	44.194
07/24/02	07:33:11	44.592
07/24/02	07:34:11	44.962
07/24/02	07:35:11	45.360
07/24/02	07:36:11	44.023
07/24/02	07:37:11	44.905
07/24/02	07:38:11	45.417
07/24/02	07:39:11	44.620
07/24/02	07:40:11	45.075
07/24/02	07:41:11	46.725
07/24/02	07:42:11	45.872
07/24/02	07:43:11	45.360
07/24/02	07:44:11	45.275
07/24/02	07:45:11	45.985
07/24/02	07:46:11	45.701
07/24/02	07:47:11	45.872
07/24/02	07:48:11	45.616
07/24/02	07:49:11	44.905
07/24/02	07:50:11	45.929
07/24/02	07:51:11	46.128
07/24/02	07:52:11	46.270
07/24/02	07:53:11	46.583
07/24/02	07:54:11	46.753
07/24/02	07:55:11	46.071
07/24/02	07:56:11	46.640
07/24/02	07:57:11	46.355
07/24/02	07:58:11	45.644
07/24/02	07:59:11	46.270
07/24/02	08:00:11	46.526
07/24/02	08:01:11	45.843
07/24/02	08:02:11	43.881
07/24/02	08:03:11	43.483
07/24/02	08:04:11	44.023
07/24/02	08:05:11	45.616
07/24/02	08:06:11	44.336
07/24/02	08:07:11	44.478
07/24/02	08:08:11	44.706
07/24/02	08:09:11	44.706
07/24/02	08:10:11	45.985
07/24/02	08:11:11	44.620
07/24/02	08:12:11	44.364
07/24/02	08:13:11	44.876
07/24/02	08:14:11	45.218
07/24/02	08:15:11	43.853
07/24/02	08:16:11	42.943
07/24/02	08:17:11	42.800

COMANCHE AND LINSEY - NO. 6161 cont.

Date	Time	Pres (PSI)
07/24/02	08:18:11	44.620
07/24/02	08:19:11	43.853
07/24/02	08:20:11	44.791
07/24/02	08:21:11	44.706
07/24/02	08:22:11	44.450
07/24/02	08:23:11	33.074
07/24/02	08:24:11	29.605
07/24/02	08:25:11	31.937
07/24/02	08:26:11	30.600
07/24/02	08:27:11	29.662
07/24/02	08:28:11	28.894
07/24/02	08:29:11	42.658
07/24/02	08:30:11	47.123
07/24/02	08:31:11	43.312
07/24/02	08:32:11	43.255
07/24/02	08:33:11	43.454
07/24/02	08:34:11	43.085
07/24/02	08:35:11	43.653
07/24/02	08:36:11	43.682
07/24/02	08:37:11	42.971
07/24/02	08:38:11	42.488
07/24/02	08:39:11	42.573
07/24/02	08:40:11	42.715
07/24/02	08:41:11	42.516
07/24/02	08:42:11	42.971
07/24/02	08:43:11	42.886
07/24/02	08:44:11	42.573
07/24/02	08:45:11	43.540
07/24/02	08:46:11	41.265
07/24/02	08:47:11	40.184
07/24/02	08:48:11	40.867
07/24/02	08:49:11	41.407
07/24/02	08:50:11	41.094
07/24/02	08:51:11	40.525
07/24/02	08:52:11	40.952
07/24/02	08:53:11	39.644
07/24/02	08:54:11	40.156
07/24/02	08:55:11	39.189
07/24/02	08:56:11	40.440
07/24/02	08:57:11	40.326
07/24/02	08:58:11	40.667
07/24/02	08:59:11	43.255
07/24/02	09:00:11	42.118
07/24/02	09:01:11	42.004
07/24/02	09:02:11	52.384
07/24/02	09:03:11	46.497
07/24/02	09:04:11	42.374
07/24/02	09:05:11	44.819
07/24/02	09:06:11	44.308
07/24/02	09:07:11	44.393
07/24/02	09:08:11	44.535
07/24/02	09:09:11	43.796
07/24/02	09:10:11	45.530
07/24/02	09:11:11	44.535
07/24/02	09:12:11	44.592
07/24/02	09:13:11	43.540
07/24/02	09:14:11	43.682
07/24/02	09:15:11	45.218
07/24/02	09:16:11	43.483
07/24/02	09:17:11	44.165
07/24/02	09:18:11	43.966
07/24/02	09:19:11	40.980
07/24/02	09:20:11	39.416
07/24/02	09:21:11	38.961
07/24/02	09:22:11	39.672
07/24/02	09:23:11	38.961
07/24/02	09:24:11	38.648
07/24/02	09:25:11	38.080
07/24/02	09:26:11	38.648
07/24/02	09:27:11	38.136
07/24/02	09:28:11	36.089
07/24/02	09:29:11	36.828
07/24/02	09:30:11	37.141
07/24/02	09:31:11	36.316
07/24/02	09:32:11	36.487
07/24/02	09:33:11	37.226
07/24/02	09:34:11	38.677
07/24/02	09:35:11	38.364
07/24/02	09:36:11	38.876
07/24/02	09:37:11	39.473
07/24/02	09:38:11	38.563
07/24/02	09:39:11	39.615
07/24/02	09:40:11	38.364
07/24/02	09:41:11	39.189
07/24/02	09:42:11	38.961
07/24/02	09:43:11	44.962
07/24/02	09:44:11	44.052
07/24/02	09:45:11	44.364
07/24/02	09:46:11	43.625
07/24/02	09:47:11	43.312
07/24/02	09:48:11	43.824
07/24/02	09:49:11	45.161
07/24/02	09:50:11	44.308
07/24/02	09:51:11	45.559
07/24/02	09:52:11	44.336
07/24/02	09:53:11	44.450
07/24/02	09:54:11	44.450
07/24/02	09:55:11	43.739
07/24/02	09:56:11	45.502
07/24/02	09:57:11	44.052
07/24/02	09:58:11	43.767
07/24/02	09:59:11	43.909
07/24/02	10:00:11	44.677
07/24/02	10:01:11	45.132
07/24/02	10:02:11	44.080
07/24/02	10:03:11	43.369
07/24/02	10:04:11	44.763
07/24/02	10:05:11	43.227
07/24/02	10:06:11	32.534
07/24/02	10:07:11	33.899
07/24/02	10:08:11	33.728
07/24/02	10:09:11	33.131
07/24/02	10:10:11	34.752
07/24/02	10:11:11	34.354
07/24/02	10:12:11	34.667
07/24/02	10:13:11	35.662
07/24/02	10:14:11	33.444
07/24/02	10:15:11	34.923
07/24/02	10:16:11	31.510
07/24/02	10:17:11	32.449
07/24/02	10:18:11	32.989
07/24/02	10:19:11	31.396
07/24/02	10:20:11	31.681
07/24/02	10:21:11	31.453
07/24/02	10:22:11	32.648
07/24/02	10:23:11	36.259
07/24/02	10:24:11	45.047
07/24/02	10:25:11	46.668
07/24/02	10:26:11	43.056
07/24/02	10:27:11	43.483
07/24/02	10:28:11	43.966
07/24/02	10:29:11	42.914
07/24/02	10:30:11	44.649
07/24/02	10:31:11	44.564
07/24/02	10:32:11	44.791
07/24/02	10:33:11	44.194
07/24/02	10:34:11	44.023
07/24/02	10:35:11	44.393
07/24/02	10:36:11	43.597
07/24/02	10:37:11	44.023
07/24/02	10:38:11	44.649
07/24/02	10:39:11	43.881
07/24/02	10:40:11	44.279
07/24/02	10:41:11	43.142
07/24/02	10:42:11	43.881
07/24/02	10:43:11	44.620
07/24/02	10:44:11	44.023
07/24/02	10:45:11	43.909
07/24/02	10:46:11	44.478
07/24/02	10:47:11	43.170
07/24/02	10:48:11	43.853
07/24/02	10:49:11	43.540
07/24/02	10:50:11	44.706
07/24/02	10:51:11	44.507
07/24/02	10:52:11	42.943
07/24/02	10:53:11	40.923
07/24/02	10:54:11	41.179
07/24/02	10:55:11	42.402
07/24/02	10:56:11	43.227
07/24/02	10:57:11	41.748
07/24/02	10:58:11	43.540
07/24/02	10:59:11	44.677
07/24/02	11:00:11	37.880
07/24/02	11:01:11	11.432
07/24/02	11:02:11	9.385
07/24/02	11:03:11	7.906
07/24/02	11:04:11	6.740
07/24/02	11:05:11	8.105
07/24/02	11:06:11	8.532
07/24/02	11:07:11	8.589
07/24/02	11:08:11	8.816
07/24/02	11:09:11	8.816
07/24/02	11:10:11	8.702
07/24/02	11:11:11	8.731
07/24/02	11:12:11	8.418
07/24/02	11:13:11	8.190
07/24/02	11:14:11	8.105
07/24/02	11:15:11	8.247
07/24/02	11:16:11	7.792
07/24/02	11:17:11	7.963
07/24/02	11:18:11	7.707
07/24/02	11:19:11	7.707
07/24/02	11:20:11	7.735
07/24/02	11:21:11	7.764
07/24/02	11:22:11	10.579
07/24/02	11:23:11	11.944
07/24/02	11:24:11	13.793
07/24/02	11:25:11	17.092
07/24/02	11:26:11	22.580
07/24/02	11:27:11	28.695
07/24/02	11:28:11	35.947
07/24/02	11:29:11	43.142
07/24/02	11:30:11	42.829
07/24/02	11:31:11	42.630
07/24/02	11:32:11	41.634
07/24/02	11:33:11	42.687
07/24/02	11:34:11	43.938
07/24/02	11:35:11	42.118
07/24/02	11:36:11	42.743
07/24/02	11:37:11	43.454
07/24/02	11:38:11	45.132
07/24/02	11:39:11	42.203
07/24/02	11:40:11	43.909
07/24/02	11:41:11	44.393
07/24/02	11:42:11	44.677
07/24/02	11:43:11	43.966
07/24/02	11:44:11	44.137
07/24/02	11:45:11	43.966
07/24/02	11:46:11	44.990
07/24/02	11:47:11	43.255
07/24/02	11:48:11	44.137
07/24/02	11:49:11	44.706
07/24/02	11:50:11	44.308
07/24/02	11:51:11	44.222
07/24/02	11:52:11	44.080
07/24/02	11:53:11	44.734
07/24/02	11:54:11	44.137
07/24/02	11:55:11	45.474
07/24/02	11:56:11	45.246
07/24/02	11:57:11	44.421
07/24/02	11:58:11	44.137
07/24/02	11:59:11	45.275
07/24/02	12:00:11	44.308
07/24/02	12:01:11	44.023
07/24/02	12:02:11	43.682
07/24/02	12:03:11	44.222
07/24/02	12:04:11	43.625
07/24/02	12:05:11	44.962
07/24/02	12:06:11	44.109
07/24/02	12:07:11	44.194
07/24/02	12:08:11	44.933
07/24/02	12:09:11	44.819
07/24/02	12:10:11	44.962
07/24/02	12:11:11	43.568
07/24/02	12:12:11	43.511
07/24/02	12:13:11	43.568
07/24/02	12:14:11	43.426
07/24/02	12:15:11	43.568
07/24/02	12:16:11	23.718
07/24/02	12:17:11	15.414
07/24/02	12:18:11	24.827
07/24/02	12:19:11	28.581
07/24/02	12:20:11	42.772
07/24/02	12:21:11	49.284
07/24/02	12:22:11	46.185
07/24/02	12:23:11	43.682
07/24/02	12:24:11	43.341
07/24/02	12:25:11	44.251
07/24/02	12:26:11	43.824
07/24/02	12:27:11	43.483
07/24/02	12:28:11	43.568
07/24/02	12:29:11	43.710
07/24/02	12:30:11	43.483
07/24/02	12:31:11	43.682
07/24/02	12:32:11	44.279
07/24/02	12:33:11	44.251
07/24/02	12:34:11	44.592
07/24/02	12:35:11	44.848
07/24/02	12:36:11	43.056
07/24/02	12:37:11	43.341
07/24/02	12:38:11	44.023
07/24/02	12:39:11	43.369
07/24/02	12:40:11	43.625

COMANCHE AND LINSEY - NO. 6161 cont.

Date	Time	Pres (PSI)
07/24/02	12:41:11	44.450
07/24/02	12:42:11	43.966
07/24/02	12:43:11	43.483
07/24/02	12:44:11	43.426
07/24/02	12:45:11	43.995
07/24/02	12:46:11	43.483
07/24/02	12:47:11	44.222
07/24/02	12:48:11	43.142
07/24/02	12:49:11	43.739
07/24/02	12:50:11	43.483
07/24/02	12:51:11	44.137
07/24/02	12:52:11	43.483
07/24/02	12:53:11	42.971
07/24/02	12:54:11	42.260
07/24/02	12:55:11	42.715
07/24/02	12:56:11	42.516
07/24/02	12:57:11	43.369
07/24/02	12:58:11	43.398
07/24/02	12:59:11	42.715
07/24/02	13:00:11	40.781
07/24/02	13:01:11	41.293
07/24/02	13:02:11	40.269
07/24/02	13:03:11	39.615
07/24/02	13:04:11	40.611
07/24/02	13:05:11	40.525
07/24/02	13:06:11	41.521
07/24/02	13:07:11	40.639
07/24/02	13:08:11	39.928
07/24/02	13:09:11	40.582
07/24/02	13:10:11	40.781
07/24/02	13:11:11	40.525
07/24/02	13:12:11	39.871
07/24/02	13:13:11	39.615
07/24/02	13:14:11	40.867
07/24/02	13:15:11	41.208
07/24/02	13:16:11	40.667
07/24/02	13:17:11	42.829
07/24/02	13:18:11	43.284
07/24/02	13:19:11	41.919
07/24/02	13:20:11	42.061
07/24/02	13:21:11	42.658
07/24/02	13:22:11	41.748
07/24/02	13:23:11	44.109
07/24/02	13:24:11	44.165
07/24/02	13:25:11	43.398
07/24/02	13:26:11	43.938
07/24/02	13:27:11	43.739
07/24/02	13:28:11	43.284
07/24/02	13:29:11	43.853
07/24/02	13:30:11	42.374
07/24/02	13:31:11	42.886
07/24/02	13:32:11	43.085
07/24/02	13:33:11	43.426
07/24/02	13:34:11	43.710
07/24/02	13:35:11	44.109
07/24/02	13:36:11	42.886
07/24/02	13:37:11	43.369
07/24/02	13:38:11	43.739
07/24/02	13:39:11	44.080
07/24/02	13:40:11	43.625
07/24/02	13:41:11	43.796
07/24/02	13:42:11	42.345
07/24/02	13:43:11	40.753
07/24/02	13:44:11	40.867
07/24/02	13:45:11	41.435
07/24/02	13:46:11	42.886
07/24/02	13:47:11	41.862
07/24/02	13:48:11	43.227
07/24/02	13:49:11	44.450
07/24/02	13:50:11	43.369
07/24/02	13:51:11	43.198
07/24/02	13:52:11	43.853
07/24/02	13:53:11	43.198
07/24/02	13:54:11	42.914
07/24/02	13:55:11	43.085
07/24/02	13:56:11	43.198
07/24/02	13:57:11	43.369
07/24/02	13:58:11	42.715
07/24/02	13:59:11	42.857
07/24/02	14:00:11	43.767
07/24/02	14:01:11	43.853
07/24/02	14:02:11	43.028
07/24/02	14:03:11	43.056
07/24/02	14:04:11	43.398
07/24/02	14:05:11	43.113
07/24/02	14:06:11	43.028
07/24/02	14:07:11	42.061
07/24/02	14:08:11	42.089
07/24/02	14:09:11	42.146
07/24/02	14:10:11	42.687
07/24/02	14:11:11	42.829
07/24/02	14:12:11	42.175
07/24/02	14:13:11	42.402
07/24/02	14:14:11	43.255
07/24/02	14:15:11	42.971
07/24/02	14:16:11	42.715
07/24/02	14:17:11	41.236
07/24/02	14:18:11	42.402
07/24/02	14:19:11	42.402
07/24/02	14:20:11	42.829
07/24/02	14:21:11	43.085
07/24/02	14:22:11	43.341
07/24/02	14:23:11	42.544
07/24/02	14:24:11	42.203
07/24/02	14:25:11	42.004
07/24/02	14:26:11	42.886
07/24/02	14:27:11	42.573
07/24/02	14:28:11	41.663
07/24/02	14:29:11	41.777
07/24/02	14:30:11	43.142
07/24/02	14:31:11	42.857
07/24/02	14:32:11	42.175
07/24/02	14:33:11	42.032
07/24/02	14:34:11	42.260
07/24/02	14:35:11	42.459
07/24/02	14:36:11	42.886
07/24/02	14:37:11	42.032
07/24/02	14:38:11	42.886
07/24/02	14:39:11	43.568
07/24/02	14:40:11	44.222
07/24/02	14:41:11	42.687
07/24/02	14:42:11	42.032
07/24/02	14:43:11	42.886
07/24/02	14:44:11	43.312
07/24/02	14:45:11	41.407
07/24/02	14:46:11	42.914
07/24/02	14:47:11	43.284
07/24/02	14:48:11	44.308
07/24/02	14:49:11	43.227
07/24/02	14:50:11	41.236
07/24/02	14:51:11	41.350
07/24/02	14:52:11	41.009
07/24/02	14:53:11	40.867
07/24/02	14:54:11	40.070
07/24/02	14:55:11	41.577
07/24/02	14:56:11	42.601
07/24/02	14:57:11	43.170
07/24/02	14:58:11	43.198
07/24/02	14:59:11	44.023
07/24/02	15:00:11	43.341
07/24/02	15:01:11	43.085
07/24/02	15:02:11	43.341
07/24/02	15:03:11	0.483
07/24/02	15:04:11	0.427
07/24/02	15:05:11	0.398
07/24/02	15:06:11	0.455
07/24/02	15:07:11	0.483
07/24/02	15:08:11	0.455
07/24/02	15:09:11	0.455
07/24/02	15:10:11	0.455
07/24/02	15:11:11	0.455
07/24/02	15:12:11	0.398
07/24/02	15:13:11	0.398
07/24/02	15:14:11	0.398
07/24/02	15:15:11	0.398
07/24/02	15:16:11	0.398
07/24/02	15:17:11	0.398
07/24/02	15:18:11	0.398
07/24/02	15:19:11	0.398
07/24/02	15:20:11	0.398
07/24/02	15:21:11	0.427
07/24/02	15:22:11	0.427
07/24/02	15:23:11	0.427
07/24/02	15:24:11	0.398
07/24/02	15:25:11	0.427
07/24/02	15:26:11	0.398
07/24/02	15:27:11	0.398
07/24/02	15:28:11	0.398
07/24/02	15:29:11	0.398
07/24/02	15:30:11	0.398
07/24/02	15:31:11	0.398
07/24/02	15:32:11	0.398
07/24/02	15:33:11	0.370
07/24/02	15:34:11	0.370
07/24/02	15:35:11	0.398
07/24/02	15:36:11	0.370
07/24/02	15:37:11	0.370
07/24/02	15:38:11	0.341
07/24/02	15:39:11	0.370
07/24/02	15:40:11	0.341
07/24/02	15:41:11	0.370
07/24/02	15:42:11	0.370
07/24/02	15:43:11	0.370
07/24/02	15:44:11	0.398
07/24/02	15:45:11	0.341
07/24/02	15:46:11	0.341
07/24/02	15:47:11	0.313
07/24/02	15:48:11	0.313
07/24/02	15:49:11	0.313
07/24/02	15:50:11	0.284
07/24/02	15:51:11	0.313
07/24/02	15:52:11	0.313
07/24/02	15:53:11	0.313
07/24/02	15:54:11	0.313

CRADDOCK AND RANCH ROAD 12 - NO. 7157

Date	Time	Pres (PSI)	Date	Time	Pres (PSI)	Date	Time	Pres (PSI)	Date	Time	Pres (PSI)
07/22/02	07:53:03	0.000	07/22/02	08:59:03	-0.142	07/22/02	10:05:03	81.335	07/22/02	11:11:03	76.614
07/22/02	07:54:03	-0.028	07/22/02	09:00:03	-0.142	07/22/02	10:06:03	82.160	07/22/02	11:12:03	76.187
07/22/02	07:55:03	-0.085	07/22/02	09:01:03	-0.199	07/22/02	10:07:03	81.705	07/22/02	11:13:03	77.609
07/22/02	07:56:03	-0.057	07/22/02	09:02:03	-0.171	07/22/02	10:08:03	82.017	07/22/02	11:14:03	76.415
07/22/02	07:57:03	-0.057	07/22/02	09:03:03	-0.142	07/22/02	10:09:03	81.847	07/22/02	11:15:03	77.097
07/22/02	07:58:03	-0.057	07/22/02	09:04:03	-0.171	07/22/02	10:10:03	81.790	07/22/02	11:16:03	76.301
07/22/02	07:59:03	-0.028	07/22/02	09:05:03	-0.142	07/22/02	10:11:03	81.875	07/22/02	11:17:03	76.955
07/22/02	08:00:03	-0.028	07/22/02	09:06:03	-0.171	07/22/02	10:12:03	81.022	07/22/02	11:18:03	75.818
07/22/02	08:01:03	-0.028	07/22/02	09:07:03	-0.142	07/22/02	10:13:03	81.676	07/22/02	11:19:03	76.756
07/22/02	08:02:03	-0.028	07/22/02	09:08:03	-0.142	07/22/02	10:14:03	81.193	07/22/02	11:20:03	76.927
07/22/02	08:03:03	-0.028	07/22/02	09:09:03	-0.085	07/22/02	10:15:03	81.904	07/22/02	11:21:03	77.410
07/22/02	08:04:03	-0.028	07/22/02	09:10:03	-0.142	07/22/02	10:16:03	81.676	07/22/02	11:22:03	76.159
07/22/02	08:05:03	0.028	07/22/02	09:11:03	-0.114	07/22/02	10:17:03	81.932	07/22/02	11:23:03	76.472
07/22/02	08:06:03	-0.028	07/22/02	09:12:03	-0.114	07/22/02	10:18:03	81.961	07/22/02	11:24:03	77.325
07/22/02	08:07:03	-0.028	07/22/02	09:13:03	-0.171	07/22/02	10:19:03	81.875	07/22/02	11:25:03	76.045
07/22/02	08:08:03	-0.028	07/22/02	09:14:03	-0.085	07/22/02	10:20:03	81.932	07/22/02	11:26:03	75.363
07/22/02	08:09:03	-0.057	07/22/02	09:15:03	-0.085	07/22/02	10:21:03	81.705	07/22/02	11:27:03	77.012
07/22/02	08:10:03	-0.028	07/22/02	09:16:03	-0.057	07/22/02	10:22:03	81.733	07/22/02	11:28:03	76.671
07/22/02	08:11:03	0.000	07/22/02	09:17:03	-0.028	07/22/02	10:23:03	81.761	07/22/02	11:29:03	76.699
07/22/02	08:12:03	-0.028	07/22/02	09:18:03	-0.057	07/22/02	10:24:03	80.908	07/22/02	11:30:03	76.586
07/22/02	08:13:03	-0.057	07/22/02	09:19:03	0.000	07/22/02	10:25:03	81.363	07/22/02	11:31:03	76.699
07/22/02	08:14:03	-0.057	07/22/02	09:20:03	-0.085	07/22/02	10:26:03	81.932	07/22/02	11:32:03	76.159
07/22/02	08:15:03	0.000	07/22/02	09:21:03	0.028	07/22/02	10:27:03	82.188	07/22/02	11:33:03	76.984
07/22/02	08:16:03	-0.028	07/22/02	09:22:03	-0.028	07/22/02	10:28:03	81.818	07/22/02	11:34:03	75.875
07/22/02	08:17:03	-0.057	07/22/02	09:23:03	-0.028	07/22/02	10:29:03	82.359	07/22/02	11:35:03	75.818
07/22/02	08:18:03	-0.085	07/22/02	09:24:03	0.000	07/22/02	10:30:03	82.131	07/22/02	11:36:03	76.671
07/22/02	08:19:03	-0.085	07/22/02	09:25:03	-0.057	07/22/02	10:31:03	82.017	07/22/02	11:37:03	76.586
07/22/02	08:20:03	-0.085	07/22/02	09:26:03	-0.114	07/22/02	10:32:03	81.875	07/22/02	11:38:03	77.154
07/22/02	08:21:03	-0.085	07/22/02	09:27:03	-0.028	07/22/02	10:33:03	82.160	07/22/02	11:39:03	75.988
07/22/02	08:22:03	-0.085	07/22/02	09:28:03	-0.057	07/22/02	10:34:03	81.847	07/22/02	11:40:03	77.496
07/22/02	08:23:03	-0.085	07/22/02	09:29:03	-0.114	07/22/02	10:35:03	81.591	07/22/02	11:41:03	75.988
07/22/02	08:24:03	-0.057	07/22/02	09:30:03	-0.057	07/22/02	10:36:03	81.790	07/22/02	11:42:03	76.472
07/22/02	08:25:03	-0.085	07/22/02	09:31:03	-0.085	07/22/02	10:37:03	81.420	07/22/02	11:43:03	76.387
07/22/02	08:26:03	-0.114	07/22/02	09:32:03	-0.085	07/22/02	10:38:03	80.908	07/22/02	11:44:03	75.676
07/22/02	08:27:03	-0.085	07/22/02	09:33:03	-0.085	07/22/02	10:39:03	81.705	07/22/02	11:45:03	76.443
07/22/02	08:28:03	-0.028	07/22/02	09:34:03	-0.142	07/22/02	10:40:03	79.941	07/22/02	11:46:03	75.988
07/22/02	08:29:03	0.000	07/22/02	09:35:03	-0.057	07/22/02	10:41:03	81.363	07/22/02	11:47:03	76.671
07/22/02	08:30:03	0.057	07/22/02	09:36:03	-0.028	07/22/02	10:42:03	80.994	07/22/02	11:48:03	76.131
07/22/02	08:31:03	0.000	07/22/02	09:37:03	-0.057	07/22/02	10:43:03	81.022	07/22/02	11:49:03	76.330
07/22/02	08:32:03	-0.028	07/22/02	09:38:03	-0.057	07/22/02	10:44:03	81.079	07/22/02	11:50:03	76.785
07/22/02	08:33:03	-0.057	07/22/02	09:39:03	-0.114	07/22/02	10:45:03	81.250	07/22/02	11:51:03	76.443
07/22/02	08:34:03	-0.028	07/22/02	09:40:03	-0.114	07/22/02	10:46:03	81.335	07/22/02	11:52:03	76.614
07/22/02	08:35:03	-0.057	07/22/02	09:41:03	0.028	07/22/02	10:47:03	80.169	07/22/02	11:53:03	75.732
07/22/02	08:36:03	-0.085	07/22/02	09:42:03	81.306	07/22/02	10:48:03	81.449	07/22/02	11:54:03	76.045
07/22/02	08:37:03	-0.114	07/22/02	09:43:03	81.477	07/22/02	10:49:03	81.164	07/22/02	11:55:03	76.187
07/22/02	08:38:03	-0.057	07/22/02	09:44:03	81.705	07/22/02	10:50:03	81.705	07/22/02	11:56:03	76.273
07/22/02	08:39:03	-0.114	07/22/02	09:45:03	82.131	07/22/02	10:51:03	79.088	07/22/02	11:57:03	75.363
07/22/02	08:40:03	-0.085	07/22/02	09:46:03	81.449	07/22/02	10:52:03	64.812	07/22/02	11:58:03	76.955
07/22/02	08:41:03	-0.057	07/22/02	09:47:03	81.875	07/22/02	10:53:03	79.060	07/22/02	11:59:03	74.766
07/22/02	08:42:03	-0.057	07/22/02	09:48:03	82.074	07/22/02	10:54:03	80.226	07/22/02	12:00:03	76.614
07/22/02	08:43:03	-0.085	07/22/02	09:49:03	81.221	07/22/02	10:55:03	76.074	07/22/02	12:01:03	75.135
07/22/02	08:44:03	-0.114	07/22/02	09:50:03	81.790	07/22/02	10:56:03	77.496	07/22/02	12:02:03	75.363
07/22/02	08:45:03	-0.142	07/22/02	09:51:03	81.420	07/22/02	10:57:03	77.126	07/22/02	12:03:03	75.192
07/22/02	08:46:03	-0.114	07/22/02	09:52:03	81.904	07/22/02	10:58:03	76.671	07/22/02	12:04:03	76.244
07/22/02	08:47:03	-0.114	07/22/02	09:53:03	82.302	07/22/02	10:59:03	78.150	07/22/02	12:05:03	75.818
07/22/02	08:48:03	-0.142	07/22/02	09:54:03	82.330	07/22/02	11:00:03	76.984	07/22/02	12:06:03	75.533
07/22/02	08:49:03	-0.114	07/22/02	09:55:03	81.705	07/22/02	11:01:03	75.761	07/22/02	12:07:03	76.358
07/22/02	08:50:03	-0.085	07/22/02	09:56:03	82.529	07/22/02	11:02:03	77.496	07/22/02	12:08:03	76.216
07/22/02	08:51:03	-0.114	07/22/02	09:57:03	82.160	07/22/02	11:03:03	76.785	07/22/02	12:09:03	76.415
07/22/02	08:52:03	-0.114	07/22/02	09:58:03	81.961	07/22/02	11:04:03	76.614	07/22/02	12:10:03	75.277
07/22/02	08:53:03	-0.057	07/22/02	09:59:03	82.074	07/22/02	11:05:03	77.097	07/22/02	12:11:03	76.330
07/22/02	08:54:03	-0.142	07/22/02	10:00:03	81.818	07/22/02	11:06:03	77.097	07/22/02	12:12:03	75.676
07/22/02	08:55:03	-0.142	07/22/02	10:01:03	81.932	07/22/02	11:07:03	76.756	07/22/02	12:13:03	75.761
07/22/02	08:56:03	-0.142	07/22/02	10:02:03	81.961	07/22/02	11:08:03	76.728	07/22/02	12:14:03	76.187
07/22/02	08:57:03	-0.142	07/22/02	10:03:03	82.273	07/22/02	11:09:03	75.960	07/22/02	12:15:03	75.619
07/22/02	08:58:03	-0.114	07/22/02	10:04:03	81.790	07/22/02	11:10:03	77.012	07/22/02	12:16:03	76.017

CRADDOCK AND RANCH ROAD 12 - NO. 7157 cont.

Date	Time	Pres (PSI)
07/22/02	12:17:03	76.387
07/22/02	12:18:03	75.562
07/22/02	12:19:03	76.472
07/22/02	12:20:03	76.131
07/22/02	12:21:03	76.244
07/22/02	12:22:03	74.936
07/22/02	12:23:03	76.187
07/22/02	12:24:03	76.244
07/22/02	12:25:03	74.310
07/22/02	12:26:03	76.472
07/22/02	12:27:03	75.818
07/22/02	12:28:03	75.988
07/22/02	12:29:03	75.420
07/22/02	12:30:03	75.988
07/22/02	12:31:03	74.680
07/22/02	12:32:03	75.676
07/22/02	12:33:03	75.334
07/22/02	12:34:03	75.647
07/22/02	12:35:03	75.562
07/22/02	12:36:03	75.590
07/22/02	12:37:03	74.822
07/22/02	12:38:03	76.017
07/22/02	12:39:03	75.590
07/22/02	12:40:03	76.131
07/22/02	12:41:03	76.415
07/22/02	12:42:03	75.732
07/22/02	12:43:03	75.021
07/22/02	12:44:03	76.074
07/22/02	12:45:03	75.818
07/22/02	12:46:03	74.936
07/22/02	12:47:03	74.794
07/22/02	12:48:03	75.676
07/22/02	12:49:03	75.192
07/22/02	12:50:03	75.732
07/22/02	12:51:03	74.680
07/22/02	12:52:03	75.420
07/22/02	12:53:03	75.363
07/22/02	12:54:03	75.476
07/22/02	12:55:03	76.301
07/22/02	12:56:03	75.988
07/22/02	12:57:03	75.249
07/22/02	12:58:03	75.960
07/22/02	12:59:03	74.936
07/22/02	13:00:03	75.107
07/22/02	13:01:03	74.766
07/22/02	13:02:03	75.050
07/22/02	13:03:03	75.533
07/22/02	13:04:03	74.851
07/22/02	13:05:03	74.424
07/22/02	13:06:03	75.420
07/22/02	13:07:03	73.713
07/22/02	13:08:03	75.818
07/22/02	13:09:03	75.277
07/22/02	13:10:03	75.021
07/22/02	13:11:03	75.164
07/22/02	13:12:03	75.021
07/22/02	13:13:03	75.135
07/22/02	13:14:03	74.481
07/22/02	13:15:03	75.363
07/22/02	13:16:03	74.453
07/22/02	13:17:03	74.566
07/22/02	13:18:03	74.965
07/22/02	13:19:03	75.505
07/22/02	13:20:03	75.931
07/22/02	13:21:03	74.709
07/22/02	13:22:03	75.249
07/22/02	13:23:03	74.595
07/22/02	13:24:03	75.050
07/22/02	13:25:03	83.667
07/22/02	13:26:03	74.566
07/22/02	13:27:03	76.642
07/22/02	13:28:03	77.069
07/22/02	13:29:03	76.529
07/22/02	13:30:03	75.846
07/22/02	13:31:03	76.074
07/22/02	13:32:03	76.927
07/22/02	13:33:03	76.529
07/22/02	13:34:03	76.642
07/22/02	13:35:03	77.069
07/22/02	13:36:03	76.415
07/22/02	13:37:03	76.699
07/22/02	13:38:03	76.330
07/22/02	13:39:03	75.789
07/22/02	13:40:03	76.358
07/22/02	13:41:03	76.586
07/22/02	13:42:03	77.069
07/22/02	13:43:03	76.842
07/22/02	13:44:03	76.870
07/22/02	13:45:03	76.927
07/22/02	13:46:03	76.756
07/22/02	13:47:03	76.472
07/22/02	13:48:03	76.216
07/22/02	13:49:03	77.012
07/22/02	13:50:03	76.017
07/22/02	13:51:03	75.590
07/22/02	13:52:03	75.988
07/22/02	13:53:03	77.268
07/22/02	13:54:03	76.415
07/22/02	13:55:03	76.330
07/22/02	13:56:03	76.472
07/22/02	13:57:03	76.984
07/22/02	13:58:03	75.903
07/22/02	13:59:03	75.818
07/22/02	14:00:03	76.870
07/22/02	14:01:03	76.017
07/22/02	14:02:03	75.619
07/22/02	14:03:03	75.931
07/22/02	14:04:03	77.638
07/22/02	14:05:03	76.045
07/22/02	14:06:03	76.159
07/22/02	14:07:03	75.960
07/22/02	14:08:03	76.984
07/22/02	14:09:03	76.557
07/22/02	14:10:03	76.785
07/22/02	14:11:03	75.875
07/22/02	14:12:03	76.358
07/22/02	14:13:03	76.728
07/22/02	14:14:03	75.619
07/22/02	14:15:03	76.529
07/22/02	14:16:03	77.240
07/22/02	14:17:03	76.273
07/22/02	14:18:03	76.074
07/22/02	14:19:03	76.984
07/22/02	14:20:03	76.330
07/22/02	14:21:03	76.927
07/22/02	14:22:03	76.472
07/22/02	14:23:03	76.955
07/22/02	14:24:03	77.126
07/22/02	14:25:03	76.273
07/22/02	14:26:03	77.069
07/22/02	14:27:03	76.216
07/22/02	14:28:03	76.443
07/22/02	14:29:03	76.529
07/22/02	14:30:03	76.756
07/22/02	14:31:03	76.415
07/22/02	14:32:03	76.756
07/22/02	14:33:03	76.529
07/22/02	14:34:03	76.699
07/22/02	14:35:03	76.358
07/22/02	14:36:03	76.671
07/22/02	14:37:03	76.330
07/22/02	14:38:03	76.529
07/22/02	14:39:03	76.813
07/22/02	14:40:03	76.529
07/22/02	14:41:03	76.586
07/22/02	14:42:03	75.647
07/22/02	14:43:03	76.955
07/22/02	14:44:03	76.387
07/22/02	14:45:03	76.187
07/22/02	14:46:03	76.728
07/22/02	14:47:03	76.273
07/22/02	14:48:03	76.529
07/22/02	14:49:03	76.159
07/22/02	14:50:03	76.301
07/22/02	14:51:03	76.017
07/22/02	14:52:03	76.387
07/22/02	14:53:03	76.927
07/22/02	14:54:03	75.960
07/22/02	14:55:03	76.273
07/22/02	14:56:03	75.903
07/22/02	14:57:03	76.614
07/22/02	14:58:03	76.301
07/22/02	14:59:03	76.443
07/22/02	15:00:03	76.273
07/22/02	15:01:03	77.097
07/22/02	15:02:03	75.846
07/22/02	15:03:03	77.268
07/22/02	15:04:03	75.789
07/22/02	15:05:03	75.761
07/22/02	15:06:03	76.870
07/22/02	15:07:03	76.301
07/22/02	15:08:03	76.387
07/22/02	15:09:03	76.842
07/22/02	15:10:03	76.699
07/22/02	15:11:03	76.330
07/22/02	15:12:03	76.330
07/22/02	15:13:03	75.988
07/22/02	15:14:03	76.785
07/22/02	15:15:03	75.846
07/22/02	15:16:03	75.960
07/22/02	15:17:03	75.676
07/22/02	15:18:03	76.557
07/22/02	15:19:03	76.330
07/22/02	15:20:03	76.813
07/22/02	15:21:03	76.159
07/22/02	15:22:03	76.955
07/22/02	15:23:03	76.244
07/22/02	15:24:03	76.159
07/22/02	15:25:03	76.301
07/22/02	15:26:03	77.581
07/22/02	15:27:03	76.358
07/22/02	15:28:03	77.211
07/22/02	15:29:03	76.045
07/22/02	15:30:03	76.273
07/22/02	15:31:03	76.273
07/22/02	15:32:03	76.358
07/22/02	15:33:03	76.955
07/22/02	15:34:03	76.330
07/22/02	15:35:03	76.813
07/22/02	15:36:03	76.614
07/22/02	15:37:03	76.131
07/22/02	15:38:03	75.960
07/22/02	15:39:03	76.671
07/22/02	15:40:03	76.728
07/22/02	15:41:03	76.529
07/22/02	15:42:03	76.415
07/22/02	15:43:03	76.216
07/22/02	15:44:03	76.074
07/22/02	15:45:03	77.012
07/22/02	15:46:03	76.472
07/22/02	15:47:03	76.330
07/22/02	15:48:03	77.012
07/22/02	15:49:03	76.415
07/22/02	15:50:03	75.647
07/22/02	15:51:03	77.268
07/22/02	15:52:03	76.756
07/22/02	15:53:03	77.439
07/22/02	15:54:03	76.244
07/22/02	15:55:03	76.813
07/22/02	15:56:03	76.131
07/22/02	15:57:03	76.870
07/22/02	15:58:03	76.813
07/22/02	15:59:03	75.960
07/22/02	16:00:03	76.387
07/22/02	16:01:03	75.818
07/22/02	16:02:03	77.097
07/22/02	16:03:03	76.557
07/22/02	16:04:03	76.074
07/22/02	16:05:03	76.614
07/22/02	16:06:03	76.813
07/22/02	16:07:03	76.984
07/22/02	16:08:03	76.131
07/22/02	16:09:03	77.183
07/22/02	16:10:03	76.614
07/22/02	16:11:03	76.813
07/22/02	16:12:03	76.955
07/22/02	16:13:03	76.131
07/22/02	16:14:03	76.785
07/22/02	16:15:03	76.358
07/22/02	16:16:03	76.330
07/22/02	16:17:03	76.244
07/22/02	16:18:03	76.187
07/22/02	16:19:03	76.614
07/22/02	16:20:03	75.875
07/22/02	16:21:03	76.642
07/22/02	16:22:03	76.728
07/22/02	16:23:03	76.415
07/22/02	16:24:03	76.870
07/22/02	16:25:03	77.097
07/22/02	16:26:03	75.875
07/22/02	16:27:03	76.728
07/22/02	16:28:03	76.529
07/22/02	16:29:03	76.557
07/22/02	16:30:03	75.505
07/22/02	16:31:03	76.358
07/22/02	16:32:03	77.325
07/22/02	16:33:03	75.476
07/22/02	16:34:03	77.154
07/22/02	16:35:03	75.988
07/22/02	16:36:03	77.240
07/22/02	16:37:03	75.363
07/22/02	16:38:03	77.865
07/22/02	16:39:03	75.875
07/22/02	16:40:03	76.529

CRADDOCK AND RANCH ROAD 12 - NO. 7157 cont.

Date	Time	Pres (PSI)
07/22/02	16:41:03	76.671
07/22/02	16:42:03	76.074
07/22/02	16:43:03	76.927
07/22/02	16:44:03	76.586
07/22/02	16:45:03	76.671
07/22/02	16:46:03	76.813
07/22/02	16:47:03	75.334
07/22/02	16:48:03	77.325
07/22/02	16:49:03	75.590
07/22/02	16:50:03	77.410
07/22/02	16:51:03	77.353
07/22/02	16:52:03	76.159
07/22/02	16:53:03	77.353
07/22/02	16:54:03	76.074
07/22/02	16:55:03	77.097
07/22/02	16:56:03	77.012
07/22/02	16:57:03	75.846
07/22/02	16:58:03	77.183
07/22/02	16:59:03	76.842
07/22/02	17:00:03	75.676
07/22/02	17:01:03	82.728
07/22/02	17:02:03	76.187
07/22/02	17:03:03	76.216
07/22/02	17:04:03	76.330
07/22/02	17:05:03	77.780
07/22/02	17:06:03	77.666
07/22/02	17:07:03	76.870
07/22/02	17:08:03	77.752
07/22/02	17:09:03	77.382
07/22/02	17:10:03	77.410
07/22/02	17:11:03	78.406
07/22/02	17:12:03	77.496
07/22/02	17:13:03	77.894
07/22/02	17:14:03	77.894
07/22/02	17:15:03	77.211
07/22/02	17:16:03	77.723
07/22/02	17:17:03	77.353
07/22/02	17:18:03	77.524
07/22/02	17:19:03	77.012
07/22/02	17:20:03	77.240
07/22/02	17:21:03	78.036
07/22/02	17:22:03	76.870
07/22/02	17:23:03	77.553
07/22/02	17:24:03	77.439
07/22/02	17:25:03	77.012
07/22/02	17:26:03	77.097
07/22/02	17:27:03	76.955
07/22/02	17:28:03	77.922
07/22/02	17:29:03	77.325
07/22/02	17:30:03	77.353
07/22/02	17:31:03	77.183
07/22/02	17:32:03	77.723
07/22/02	17:33:03	77.723
07/22/02	17:34:03	77.837
07/22/02	17:35:03	77.524
07/22/02	17:36:03	77.666
07/22/02	17:37:03	77.467
07/22/02	17:38:03	77.894
07/22/02	17:39:03	77.524
07/22/02	17:40:03	77.752
07/22/02	17:41:03	78.377
07/22/02	17:42:03	78.064
07/22/02	17:43:03	77.666
07/22/02	17:44:03	77.097
07/22/02	17:45:03	78.235
07/22/02	17:46:03	77.837
07/22/02	17:47:03	78.178
07/22/02	17:48:03	77.183
07/22/02	17:49:03	78.292
07/22/02	17:50:03	77.808
07/22/02	17:51:03	77.808
07/22/02	17:52:03	77.894
07/22/02	17:53:03	79.031
07/22/02	17:54:03	76.870
07/22/02	17:55:03	78.292
07/22/02	17:56:03	77.581
07/22/02	17:57:03	77.780
07/22/02	17:58:03	77.439
07/22/02	17:59:03	77.780
07/22/02	18:00:03	77.496
07/22/02	18:01:03	78.036
07/22/02	18:02:03	77.951
07/22/02	18:03:03	77.268
07/22/02	18:04:03	78.036
07/22/02	18:05:03	77.638
07/22/02	18:06:03	77.553
07/22/02	18:07:03	77.922
07/22/02	18:08:03	77.353
07/22/02	18:09:03	76.813
07/22/02	18:10:03	77.894
07/22/02	18:11:03	78.292
07/22/02	18:12:03	77.325
07/22/02	18:13:03	77.922
07/22/02	18:14:03	77.666
07/22/02	18:15:03	77.780
07/22/02	18:16:03	77.723
07/22/02	18:17:03	78.064
07/22/02	18:18:03	78.235
07/22/02	18:19:03	77.439
07/22/02	18:20:03	77.382
07/22/02	18:21:03	77.723
07/22/02	18:22:03	78.036
07/22/02	18:23:03	77.553
07/22/02	18:24:03	78.434
07/22/02	18:25:03	77.353
07/22/02	18:26:03	77.837
07/22/02	18:27:03	77.382
07/22/02	18:28:03	77.666
07/22/02	18:29:03	78.548
07/22/02	18:30:03	77.780
07/22/02	18:31:03	77.240
07/22/02	18:32:03	77.979
07/22/02	18:33:03	76.870
07/22/02	18:34:03	77.979
07/22/02	18:35:03	77.553
07/22/02	18:36:03	77.666
07/22/02	18:37:03	77.951
07/22/02	18:38:03	77.666
07/22/02	18:39:03	77.865
07/22/02	18:40:03	77.609
07/22/02	18:41:03	78.263
07/22/02	18:42:03	77.979
07/22/02	18:43:03	77.723
07/22/02	18:44:03	77.922
07/22/02	18:45:03	78.747
07/22/02	18:46:03	77.837
07/22/02	18:47:03	77.837
07/22/02	18:48:03	77.780
07/22/02	18:49:03	78.150
07/22/02	18:50:03	77.837
07/22/02	18:51:03	78.150
07/22/02	18:52:03	78.406
07/22/02	18:53:03	78.178
07/22/02	18:54:03	76.813
07/22/02	18:55:03	78.690
07/22/02	18:56:03	78.377
07/22/02	18:57:03	77.837
07/22/02	18:58:03	77.240
07/22/02	18:59:03	77.581
07/22/02	19:00:03	78.207
07/22/02	19:01:03	78.292
07/22/02	19:02:03	77.240
07/22/02	19:03:03	78.377
07/22/02	19:04:03	77.723
07/22/02	19:05:03	78.235
07/22/02	19:06:03	77.638
07/22/02	19:07:03	77.638
07/22/02	19:08:03	77.865
07/22/02	19:09:03	77.353
07/22/02	19:10:03	78.178
07/22/02	19:11:03	78.235
07/22/02	19:12:03	78.064
07/22/02	19:13:03	77.894
07/22/02	19:14:03	77.723
07/22/02	19:15:03	77.581
07/22/02	19:16:03	78.064
07/22/02	19:17:03	77.837
07/22/02	19:18:03	78.974
07/22/02	19:19:03	78.406
07/22/02	19:20:03	78.036
07/22/02	19:21:03	78.406
07/22/02	19:22:03	77.837
07/22/02	19:23:03	77.894
07/22/02	19:24:03	78.605
07/22/02	19:25:03	77.752
07/22/02	19:26:03	78.406
07/22/02	19:27:03	78.548
07/22/02	19:28:03	77.865
07/22/02	19:29:03	78.463
07/22/02	19:30:03	78.235
07/22/02	19:31:03	78.008
07/22/02	19:32:03	78.576
07/22/02	19:33:03	78.263
07/22/02	19:34:03	78.974
07/22/02	19:35:03	77.752
07/22/02	19:36:03	79.003
07/22/02	19:37:03	77.609
07/22/02	19:38:03	78.974
07/22/02	19:39:03	78.718
07/22/02	19:40:03	78.292
07/22/02	19:41:03	77.666
07/22/02	19:42:03	78.605
07/22/02	19:43:03	78.207
07/22/02	19:44:03	78.263
07/22/02	19:45:03	78.576
07/22/02	19:46:03	78.121
07/22/02	19:47:03	78.434
07/22/02	19:48:03	77.553
07/22/02	19:49:03	79.088
07/22/02	19:50:03	78.235
07/22/02	19:51:03	78.605
07/22/02	19:52:03	78.519
07/22/02	19:53:03	79.031
07/22/02	19:54:03	78.918
07/22/02	19:55:03	77.609
07/22/02	19:56:03	78.519
07/22/02	19:57:03	78.662
07/22/02	19:58:03	78.463
07/22/02	19:59:03	78.832
07/22/02	20:00:03	77.780
07/22/02	20:01:03	77.780
07/22/02	20:02:03	78.605
07/22/02	20:03:03	78.605
07/22/02	20:04:03	78.832
07/22/02	20:05:03	79.316
07/22/02	20:06:03	79.060
07/22/02	20:07:03	78.463
07/22/02	20:08:03	78.576
07/22/02	20:09:03	78.918
07/22/02	20:10:03	78.036
07/22/02	20:11:03	78.207
07/22/02	20:12:03	78.320
07/22/02	20:13:03	78.548
07/22/02	20:14:03	78.207
07/22/02	20:15:03	78.576
07/22/02	20:16:03	78.918
07/22/02	20:17:03	78.662
07/22/02	20:18:03	77.979
07/22/02	20:19:03	79.060
07/22/02	20:20:03	78.861
07/22/02	20:21:03	77.752
07/22/02	20:22:03	78.633
07/22/02	20:23:03	79.031
07/22/02	20:24:03	78.349
07/22/02	20:25:03	78.918
07/22/02	20:26:03	78.292
07/22/02	20:27:03	78.718
07/22/02	20:28:03	78.207
07/22/02	20:29:03	79.344
07/22/02	20:30:03	78.633
07/22/02	20:31:03	79.174
07/22/02	20:32:03	78.406
07/22/02	20:33:03	78.747
07/22/02	20:34:03	78.605
07/22/02	20:35:03	79.259
07/22/02	20:36:03	78.946
07/22/02	20:37:03	78.064
07/22/02	20:38:03	78.974
07/22/02	20:39:03	79.145
07/22/02	20:40:03	78.918
07/22/02	20:41:03	78.832
07/22/02	20:42:03	79.174
07/22/02	20:43:03	79.202
07/22/02	20:44:03	78.519
07/22/02	20:45:03	78.832
07/22/02	20:46:03	79.458
07/22/02	20:47:03	77.808
07/22/02	20:48:03	78.804
07/22/02	20:49:03	78.605
07/22/02	20:50:03	78.861
07/22/02	20:51:03	79.031
07/22/02	20:52:03	79.088
07/22/02	20:53:03	78.747
07/22/02	20:54:03	79.031
07/22/02	20:55:03	78.775
07/22/02	20:56:03	79.316
07/22/02	20:57:03	78.519
07/22/02	20:58:03	79.031
07/22/02	20:59:03	78.633
07/22/02	21:00:03	78.633
07/22/02	21:01:03	79.373
07/22/02	21:02:03	78.804
07/22/02	21:03:03	77.723
07/22/02	21:04:03	79.060

CRADDOCK AND RANCH ROAD 12 - NO. 7157 cont.

Date	Time	Pres (PSI)
07/22/02	21:05:03	79.088
07/22/02	21:06:03	79.003
07/22/02	21:07:03	78.718
07/22/02	21:08:03	79.117
07/22/02	21:09:03	79.145
07/22/02	21:10:03	79.031
07/22/02	21:11:03	78.946
07/22/02	21:12:03	78.662
07/22/02	21:13:03	79.202
07/22/02	21:14:03	78.548
07/22/02	21:15:03	78.377
07/22/02	21:16:03	78.775
07/22/02	21:17:03	79.088
07/22/02	21:18:03	78.690
07/22/02	21:19:03	78.747
07/22/02	21:20:03	79.572
07/22/02	21:21:03	79.174
07/22/02	21:22:03	77.922
07/22/02	21:23:03	78.775
07/22/02	21:24:03	78.974
07/22/02	21:25:03	78.548
07/22/02	21:26:03	79.145
07/22/02	21:27:03	78.974
07/22/02	21:28:03	79.259
07/22/02	21:29:03	79.486
07/22/02	21:30:03	78.974
07/22/02	21:31:03	78.861
07/22/02	21:32:03	79.230
07/22/02	21:33:03	78.918
07/22/02	21:34:03	78.775
07/22/02	21:35:03	78.861
07/22/02	21:36:03	79.401
07/22/02	21:37:03	79.486
07/22/02	21:38:03	79.088
07/22/02	21:39:03	78.832
07/22/02	21:40:03	78.718
07/22/02	21:41:03	78.662
07/22/02	21:42:03	79.600
07/22/02	21:43:03	79.771
07/22/02	21:44:03	78.690
07/22/02	21:45:03	79.429
07/22/02	21:46:03	79.344
07/22/02	21:47:03	79.117
07/22/02	21:48:03	79.003
07/22/02	21:49:03	79.515
07/22/02	21:50:03	79.600
07/22/02	21:51:03	79.515
07/22/02	21:52:03	79.031
07/22/02	21:53:03	79.373
07/22/02	21:54:03	79.657
07/22/02	21:55:03	79.429
07/22/02	21:56:03	80.027
07/22/02	21:57:03	79.970
07/22/02	21:58:03	78.377
07/22/02	21:59:03	79.088
07/22/02	22:00:03	78.349
07/22/02	22:01:03	79.117
07/22/02	22:02:03	79.145
07/22/02	22:03:03	79.088
07/22/02	22:04:03	79.458
07/22/02	22:05:03	79.828
07/22/02	22:06:03	79.174
07/22/02	22:07:03	79.031
07/22/02	22:08:03	79.429
07/22/02	22:09:03	79.429
07/22/02	22:10:03	78.747
07/22/02	22:11:03	79.230
07/22/02	22:12:03	79.344
07/22/02	22:13:03	78.946
07/22/02	22:14:03	79.799
07/22/02	22:15:03	79.174
07/22/02	22:16:03	79.117
07/22/02	22:17:03	78.775
07/22/02	22:18:03	79.230
07/22/02	22:19:03	79.486
07/22/02	22:20:03	79.799
07/22/02	22:21:03	79.486
07/22/02	22:22:03	79.742
07/22/02	22:23:03	79.884
07/22/02	22:24:03	79.657
07/22/02	22:25:03	79.913
07/22/02	22:26:03	79.117
07/22/02	22:27:03	80.283
07/22/02	22:28:03	79.458
07/22/02	22:29:03	80.027
07/22/02	22:30:03	79.373
07/22/02	22:31:03	79.458
07/22/02	22:32:03	79.486
07/22/02	22:33:03	79.600
07/22/02	22:34:03	80.112
07/22/02	22:35:03	79.344
07/22/02	22:36:03	79.117
07/22/02	22:37:03	80.226
07/22/02	22:38:03	79.742
07/22/02	22:39:03	79.344
07/22/02	22:40:03	80.567
07/22/02	22:41:03	79.884
07/22/02	22:42:03	80.027
07/22/02	22:43:03	80.396
07/22/02	22:44:03	72.718
07/22/02	22:45:03	80.965
07/22/02	22:46:03	75.277
07/22/02	22:47:03	79.031
07/22/02	22:48:03	78.292
07/22/02	22:49:03	77.382
07/22/02	22:50:03	78.008
07/22/02	22:51:03	76.756
07/22/02	22:52:03	78.235
07/22/02	22:53:03	78.064
07/22/02	22:54:03	78.008
07/22/02	22:55:03	77.581
07/22/02	22:56:03	78.207
07/22/02	22:57:03	77.581
07/22/02	22:58:03	78.008
07/22/02	22:59:03	77.439
07/22/02	23:00:03	78.036
07/22/02	23:01:03	77.894
07/22/02	23:02:03	77.154
07/22/02	23:03:03	77.154
07/22/02	23:04:03	77.951
07/22/02	23:05:03	77.723
07/22/02	23:06:03	77.126
07/22/02	23:07:03	77.496
07/22/02	23:08:03	77.524
07/22/02	23:09:03	77.410
07/22/02	23:10:03	77.211
07/22/02	23:11:03	78.150
07/22/02	23:12:03	77.723
07/22/02	23:13:03	76.443
07/22/02	23:14:03	78.064
07/22/02	23:15:03	77.808
07/22/02	23:16:03	77.581
07/22/02	23:17:03	77.638
07/22/02	23:18:03	77.922
07/22/02	23:19:03	77.410
07/22/02	23:20:03	77.240
07/22/02	23:21:03	77.410
07/22/02	23:22:03	77.524
07/22/02	23:23:03	77.752
07/22/02	23:24:03	77.183
07/22/02	23:25:03	77.979
07/22/02	23:26:03	76.187
07/22/02	23:27:03	78.349
07/22/02	23:28:03	77.410
07/22/02	23:29:03	77.154
07/22/02	23:30:03	77.012
07/22/02	23:31:03	77.183
07/22/02	23:32:03	77.609
07/22/02	23:33:03	77.808
07/22/02	23:34:03	77.012
07/22/02	23:35:03	78.008
07/22/02	23:36:03	77.894
07/22/02	23:37:03	77.894
07/22/02	23:38:03	76.756
07/22/02	23:39:03	78.349
07/22/02	23:40:03	77.808
07/22/02	23:41:03	77.865
07/22/02	23:42:03	76.927
07/22/02	23:43:03	77.638
07/22/02	23:44:03	77.837
07/22/02	23:45:03	78.463
07/22/02	23:46:03	76.756
07/22/02	23:47:03	77.325
07/22/02	23:48:03	77.837
07/22/02	23:49:03	76.785
07/22/02	23:50:03	78.292
07/22/02	23:51:03	77.012
07/22/02	23:52:03	77.666
07/22/02	23:53:03	77.467
07/22/02	23:54:03	76.557
07/22/02	23:55:03	78.292
07/22/02	23:56:03	76.842
07/22/02	23:57:03	77.496
07/22/02	23:58:03	78.064
07/22/02	23:59:03	77.268
07/23/02	00:00:03	77.951
07/23/02	00:01:03	77.496
07/23/02	00:02:03	77.609
07/23/02	00:03:03	77.894
07/23/02	00:04:03	77.126
07/23/02	00:05:03	77.240
07/23/02	00:06:03	78.036
07/23/02	00:07:03	77.467
07/23/02	00:08:03	78.036
07/23/02	00:09:03	77.581
07/23/02	00:10:03	77.154
07/23/02	00:11:03	77.666
07/23/02	00:12:03	77.410
07/23/02	00:13:03	77.609
07/23/02	00:14:03	77.467
07/23/02	00:15:03	78.150
07/23/02	00:16:03	77.211
07/23/02	00:17:03	77.410
07/23/02	00:18:03	77.183
07/23/02	00:19:03	77.240
07/23/02	00:20:03	76.785
07/23/02	00:21:03	77.894
07/23/02	00:22:03	76.813
07/23/02	00:23:03	76.642
07/23/02	00:24:03	77.382
07/23/02	00:25:03	77.325
07/23/02	00:26:03	77.382
07/23/02	00:27:03	77.752
07/23/02	00:28:03	77.780
07/23/02	00:29:03	76.785
07/23/02	00:30:03	77.496
07/23/02	00:31:03	76.927
07/23/02	00:32:03	76.842
07/23/02	00:33:03	77.638
07/23/02	00:34:03	77.154
07/23/02	00:35:03	77.524
07/23/02	00:36:03	76.671
07/23/02	00:37:03	77.382
07/23/02	00:38:03	77.325
07/23/02	00:39:03	77.183
07/23/02	00:40:03	77.752
07/23/02	00:41:03	76.927
07/23/02	00:42:03	77.353
07/23/02	00:43:03	76.870
07/23/02	00:44:03	77.496
07/23/02	00:45:03	77.609
07/23/02	00:46:03	76.301
07/23/02	00:47:03	77.524
07/23/02	00:48:03	77.410
07/23/02	00:49:03	77.126
07/23/02	00:50:03	76.984
07/23/02	00:51:03	77.410
07/23/02	00:52:03	76.756
07/23/02	00:53:03	77.439
07/23/02	00:54:03	76.870
07/23/02	00:55:03	77.126
07/23/02	00:56:03	77.183
07/23/02	00:57:03	77.496
07/23/02	00:58:03	76.984
07/23/02	00:59:03	77.097
07/23/02	01:00:03	77.069
07/23/02	01:01:03	77.752
07/23/02	01:02:03	76.358
07/23/02	01:03:03	77.638
07/23/02	01:04:03	77.268
07/23/02	01:05:03	77.097
07/23/02	01:06:03	77.382
07/23/02	01:07:03	76.756
07/23/02	01:08:03	77.097
07/23/02	01:09:03	76.728
07/23/02	01:10:03	77.041
07/23/02	01:11:03	77.126
07/23/02	01:12:03	77.496
07/23/02	01:13:03	77.154
07/23/02	01:14:03	76.387
07/23/02	01:15:03	78.036
07/23/02	01:16:03	76.728
07/23/02	01:17:03	76.586
07/23/02	01:18:03	77.524
07/23/02	01:19:03	76.785
07/23/02	01:20:03	76.557
07/23/02	01:21:03	77.353
07/23/02	01:22:03	76.472
07/23/02	01:23:03	77.069
07/23/02	01:24:03	77.154
07/23/02	01:25:03	76.728
07/23/02	01:26:03	77.325
07/23/02	01:27:03	76.728
07/23/02	01:28:03	77.865

CRADDOCK AND RANCH ROAD 12 - NO. 7157 cont.

Date	Time	Pres (PSI)
07/23/02	01:29:03	76.870
07/23/02	01:30:03	77.439
07/23/02	01:31:03	77.097
07/23/02	01:32:03	77.069
07/23/02	01:33:03	77.325
07/23/02	01:34:03	76.813
07/23/02	01:35:03	77.126
07/23/02	01:36:03	77.581
07/23/02	01:37:03	77.581
07/23/02	01:38:03	76.785
07/23/02	01:39:03	76.813
07/23/02	01:40:03	76.842
07/23/02	01:41:03	77.126
07/23/02	01:42:03	77.126
07/23/02	01:43:03	77.467
07/23/02	01:44:03	76.927
07/23/02	01:45:03	76.984
07/23/02	01:46:03	77.183
07/23/02	01:47:03	77.183
07/23/02	01:48:03	76.813
07/23/02	01:49:03	76.785
07/23/02	01:50:03	76.557
07/23/02	01:51:03	77.069
07/23/02	01:52:03	76.671
07/23/02	01:53:03	77.126
07/23/02	01:54:03	77.097
07/23/02	01:55:03	76.557
07/23/02	01:56:03	77.041
07/23/02	01:57:03	77.069
07/23/02	01:58:03	77.410
07/23/02	01:59:03	76.813
07/23/02	02:00:03	77.410
07/23/02	02:01:03	76.045
07/23/02	02:02:03	77.126
07/23/02	02:03:03	77.382
07/23/02	02:04:03	76.614
07/23/02	02:05:03	76.955
07/23/02	02:06:03	76.728
07/23/02	02:07:03	77.012
07/23/02	02:08:03	76.301
07/23/02	02:09:03	76.614
07/23/02	02:10:03	77.097
07/23/02	02:11:03	77.353
07/23/02	02:12:03	76.557
07/23/02	02:13:03	76.472
07/23/02	02:14:03	77.069
07/23/02	02:15:03	76.813
07/23/02	02:16:03	76.614
07/23/02	02:17:03	93.450
07/23/02	02:18:03	79.884
07/23/02	02:19:03	80.851
07/23/02	02:20:03	80.624
07/23/02	02:21:03	80.908
07/23/02	02:22:03	80.795
07/23/02	02:23:03	80.851
07/23/02	02:24:03	80.965
07/23/02	02:25:03	80.652
07/23/02	02:26:03	81.136
07/23/02	02:27:03	80.994
07/23/02	02:28:03	80.908
07/23/02	02:29:03	81.050
07/23/02	02:30:03	81.392
07/23/02	02:31:03	81.050
07/23/02	02:32:03	80.851
07/23/02	02:33:03	81.079
07/23/02	02:34:03	81.250
07/23/02	02:35:03	80.965
07/23/02	02:36:03	80.738
07/23/02	02:37:03	81.050
07/23/02	02:38:03	80.624
07/23/02	02:39:03	80.709
07/23/02	02:40:03	81.363
07/23/02	02:41:03	80.908
07/23/02	02:42:03	80.766
07/23/02	02:43:03	81.022
07/23/02	02:44:03	80.851
07/23/02	02:45:03	80.795
07/23/02	02:46:03	81.136
07/23/02	02:47:03	81.562
07/23/02	02:48:03	80.908
07/23/02	02:49:03	81.079
07/23/02	02:50:03	80.937
07/23/02	02:51:03	80.965
07/23/02	02:52:03	81.050
07/23/02	02:53:03	80.965
07/23/02	02:54:03	81.136
07/23/02	02:55:03	80.766
07/23/02	02:56:03	80.766
07/23/02	02:57:03	80.738
07/23/02	02:58:03	80.823
07/23/02	02:59:03	80.567
07/23/02	03:00:03	80.908
07/23/02	03:01:03	81.050
07/23/02	03:02:03	80.709
07/23/02	03:03:03	81.079
07/23/02	03:04:03	80.795
07/23/02	03:05:03	80.908
07/23/02	03:06:03	81.079
07/23/02	03:07:03	81.107
07/23/02	03:08:03	80.681
07/23/02	03:09:03	80.738
07/23/02	03:10:03	80.908
07/23/02	03:11:03	80.795
07/23/02	03:12:03	80.795
07/23/02	03:13:03	80.965
07/23/02	03:14:03	80.823
07/23/02	03:15:03	80.795
07/23/02	03:16:03	80.851
07/23/02	03:17:03	80.965
07/23/02	03:18:03	80.510
07/23/02	03:19:03	80.823
07/23/02	03:20:03	81.079
07/23/02	03:21:03	80.738
07/23/02	03:22:03	80.851
07/23/02	03:23:03	81.050
07/23/02	03:24:03	80.994
07/23/02	03:25:03	81.449
07/23/02	03:26:03	81.164
07/23/02	03:27:03	81.164
07/23/02	03:28:03	81.221
07/23/02	03:29:03	81.136
07/23/02	03:30:03	81.420
07/23/02	03:31:03	81.221
07/23/02	03:32:03	81.619
07/23/02	03:33:03	81.193
07/23/02	03:34:03	81.505
07/23/02	03:35:03	81.306
07/23/02	03:36:03	81.250
07/23/02	03:37:03	81.306
07/23/02	03:38:03	81.705
07/23/02	03:39:03	81.875
07/23/02	03:40:03	81.505
07/23/02	03:41:03	81.449
07/23/02	03:42:03	81.221
07/23/02	03:43:03	81.562
07/23/02	03:44:03	81.790
07/23/02	03:45:03	81.761
07/23/02	03:46:03	81.619
07/23/02	03:47:03	81.847
07/23/02	03:48:03	81.420
07/23/02	03:49:03	81.961
07/23/02	03:50:03	81.818
07/23/02	03:51:03	81.619
07/23/02	03:52:03	81.790
07/23/02	03:53:03	81.790
07/23/02	03:54:03	81.733
07/23/02	03:55:03	81.733
07/23/02	03:56:03	81.790
07/23/02	03:57:03	81.790
07/23/02	03:58:03	81.847
07/23/02	03:59:03	82.131
07/23/02	04:00:03	81.676
07/23/02	04:01:03	81.761
07/23/02	04:02:03	81.733
07/23/02	04:03:03	81.591
07/23/02	04:04:03	81.449
07/23/02	04:05:03	81.875
07/23/02	04:06:03	81.505
07/23/02	04:07:03	81.449
07/23/02	04:08:03	81.505
07/23/02	04:09:03	81.619
07/23/02	04:10:03	81.761
07/23/02	04:11:03	81.904
07/23/02	04:12:03	81.790
07/23/02	04:13:03	81.619
07/23/02	04:14:03	81.733
07/23/02	04:15:03	81.818
07/23/02	04:16:03	81.392
07/23/02	04:17:03	81.705
07/23/02	04:18:03	81.705
07/23/02	04:19:03	81.790
07/23/02	04:20:03	81.761
07/23/02	04:21:03	81.534
07/23/02	04:22:03	81.733
07/23/02	04:23:03	81.989
07/23/02	04:24:03	73.884
07/23/02	04:25:03	86.681
07/23/02	04:26:03	74.282
07/23/02	04:27:03	79.316
07/23/02	04:28:03	78.804
07/23/02	04:29:03	78.548
07/23/02	04:30:03	79.145
07/23/02	04:31:03	78.377
07/23/02	04:32:03	78.718
07/23/02	04:33:03	78.178
07/23/02	04:34:03	78.747
07/23/02	04:35:03	78.519
07/23/02	04:36:03	78.406
07/23/02	04:37:03	78.150
07/23/02	04:38:03	78.263
07/23/02	04:39:03	77.951
07/23/02	04:40:03	78.633
07/23/02	04:41:03	78.292
07/23/02	04:42:03	78.463
07/23/02	04:43:03	78.406
07/23/02	04:44:03	79.202
07/23/02	04:45:03	77.922
07/23/02	04:46:03	78.718
07/23/02	04:47:03	78.775
07/23/02	04:48:03	78.377
07/23/02	04:49:03	78.349
07/23/02	04:50:03	79.060
07/23/02	04:51:03	78.548
07/23/02	04:52:03	78.008
07/23/02	04:53:03	78.690
07/23/02	04:54:03	78.548
07/23/02	04:55:03	78.974
07/23/02	04:56:03	78.747
07/23/02	04:57:03	78.121
07/23/02	04:58:03	78.690
07/23/02	04:59:03	78.775
07/23/02	05:00:03	78.320
07/23/02	05:01:03	78.178
07/23/02	05:02:03	78.263
07/23/02	05:03:03	78.605
07/23/02	05:04:03	77.666
07/23/02	05:05:03	78.463
07/23/02	05:06:03	78.207
07/23/02	05:07:03	78.178
07/23/02	05:08:03	78.008
07/23/02	05:09:03	78.036
07/23/02	05:10:03	78.349
07/23/02	05:11:03	78.036
07/23/02	05:12:03	78.178
07/23/02	05:13:03	78.662
07/23/02	05:14:03	78.235
07/23/02	05:15:03	78.320
07/23/02	05:16:03	78.463
07/23/02	05:17:03	77.837
07/23/02	05:18:03	77.951
07/23/02	05:19:03	78.377
07/23/02	05:20:03	77.780
07/23/02	05:21:03	78.008
07/23/02	05:22:03	78.463
07/23/02	05:23:03	78.121
07/23/02	05:24:03	78.207
07/23/02	05:25:03	78.064
07/23/02	05:26:03	77.808
07/23/02	05:27:03	78.548
07/23/02	05:28:03	78.150
07/23/02	05:29:03	78.292
07/23/02	05:30:03	77.951
07/23/02	05:31:03	77.865
07/23/02	05:32:03	77.723
07/23/02	05:33:03	78.377
07/23/02	05:34:03	77.808
07/23/02	05:35:03	77.951
07/23/02	05:36:03	78.036
07/23/02	05:37:03	77.979
07/23/02	05:38:03	77.041
07/23/02	05:39:03	77.894
07/23/02	05:40:03	78.377
07/23/02	05:41:03	77.439
07/23/02	05:42:03	77.951
07/23/02	05:43:03	77.808
07/23/02	05:44:03	77.951
07/23/02	05:45:03	77.183
07/23/02	05:46:03	77.951
07/23/02	05:47:03	77.609
07/23/02	05:48:03	78.235
07/23/02	05:49:03	77.553
07/23/02	05:50:03	77.808
07/23/02	05:51:03	77.581
07/23/02	05:52:03	78.463

CRADDOCK AND RANCH ROAD 12 - NO. 7157 cont.

Date	Time	Pres (PSI)
07/23/02	05:53:03	77.581
07/23/02	05:54:03	77.467
07/23/02	05:55:03	78.235
07/23/02	05:56:03	77.467
07/23/02	05:57:03	77.553
07/23/02	05:58:03	77.325
07/23/02	05:59:03	78.178
07/23/02	06:00:03	77.353
07/23/02	06:01:03	78.406
07/23/02	06:02:03	77.154
07/23/02	06:03:03	77.325
07/23/02	06:04:03	78.349
07/23/02	06:05:03	76.756
07/23/02	06:06:03	77.780
07/23/02	06:07:03	77.183
07/23/02	06:08:03	77.325
07/23/02	06:09:03	77.126
07/23/02	06:10:03	77.808
07/23/02	06:11:03	77.553
07/23/02	06:12:03	76.756
07/23/02	06:13:03	78.036
07/23/02	06:14:03	76.813
07/23/02	06:15:03	77.382
07/23/02	06:16:03	77.041
07/23/02	06:17:03	77.865
07/23/02	06:18:03	76.557
07/23/02	06:19:03	77.211
07/23/02	06:20:03	76.785
07/23/02	06:21:03	77.922
07/23/02	06:22:03	76.927
07/23/02	06:23:03	77.126
07/23/02	06:24:03	76.756
07/23/02	06:25:03	77.353
07/23/02	06:26:03	76.273
07/23/02	06:27:03	77.069
07/23/02	06:28:03	76.415
07/23/02	06:29:03	78.320
07/23/02	06:30:03	76.614
07/23/02	06:31:03	76.671
07/23/02	06:32:03	78.008
07/23/02	06:33:03	76.671
07/23/02	06:34:03	77.382
07/23/02	06:35:03	76.529
07/23/02	06:36:03	76.842
07/23/02	06:37:03	77.097
07/23/02	06:38:03	76.955
07/23/02	06:39:03	76.671
07/23/02	06:40:03	76.756
07/23/02	06:41:03	76.785
07/23/02	06:42:03	76.586
07/23/02	06:43:03	77.012
07/23/02	06:44:03	76.472
07/23/02	06:45:03	77.183
07/23/02	06:46:03	75.590
07/23/02	06:47:03	75.903
07/23/02	06:48:03	77.154
07/23/02	06:49:03	76.415
07/23/02	06:50:03	75.533
07/23/02	06:51:03	76.557
07/23/02	06:52:03	76.216
07/23/02	06:53:03	76.443
07/23/02	06:54:03	76.614
07/23/02	06:55:03	75.789
07/23/02	06:56:03	76.785
07/23/02	06:57:03	76.642
07/23/02	06:58:03	76.187
07/23/02	06:59:03	76.074
07/23/02	07:00:03	76.358
07/23/02	07:01:03	75.590
07/23/02	07:02:03	76.273
07/23/02	07:03:03	75.249
07/23/02	07:04:03	77.154
07/23/02	07:05:03	76.017
07/23/02	07:06:03	76.785
07/23/02	07:07:03	76.216
07/23/02	07:08:03	76.415
07/23/02	07:09:03	75.619
07/23/02	07:10:03	77.012
07/23/02	07:11:03	75.590
07/23/02	07:12:03	76.045
07/23/02	07:13:03	75.789
07/23/02	07:14:03	76.529
07/23/02	07:15:03	76.159
07/23/02	07:16:03	75.903
07/23/02	07:17:03	75.420
07/23/02	07:18:03	76.358
07/23/02	07:19:03	75.476
07/23/02	07:20:03	74.965
07/23/02	07:21:03	76.387
07/23/02	07:22:03	74.965
07/23/02	07:23:03	75.761
07/23/02	07:24:03	76.159
07/23/02	07:25:03	75.647
07/23/02	07:26:03	82.586
07/23/02	07:27:03	76.870
07/23/02	07:28:03	77.041
07/23/02	07:29:03	77.865
07/23/02	07:30:03	77.979
07/23/02	07:31:03	76.187
07/23/02	07:32:03	76.387
07/23/02	07:33:03	77.808
07/23/02	07:34:03	77.638
07/23/02	07:35:03	77.382
07/23/02	07:36:03	76.813
07/23/02	07:37:03	77.439
07/23/02	07:38:03	77.752
07/23/02	07:39:03	77.353
07/23/02	07:40:03	77.666
07/23/02	07:41:03	77.894
07/23/02	07:42:03	76.699
07/23/02	07:43:03	77.524
07/23/02	07:44:03	78.008
07/23/02	07:45:03	77.126
07/23/02	07:46:03	77.012
07/23/02	07:47:03	78.008
07/23/02	07:48:03	77.666
07/23/02	07:49:03	77.609
07/23/02	07:50:03	77.467
07/23/02	07:51:03	77.382
07/23/02	07:52:03	77.865
07/23/02	07:53:03	77.752
07/23/02	07:54:03	77.638
07/23/02	07:55:03	77.780
07/23/02	07:56:03	77.183
07/23/02	07:57:03	77.837
07/23/02	07:58:03	77.780
07/23/02	07:59:03	77.922
07/23/02	08:00:03	77.638
07/23/02	08:01:03	77.780
07/23/02	08:02:03	78.832
07/23/02	08:03:03	77.553
07/23/02	08:04:03	76.785
07/23/02	08:05:03	78.178
07/23/02	08:06:03	76.415
07/23/02	08:07:03	78.178
07/23/02	08:08:03	77.097
07/23/02	08:09:03	77.723
07/23/02	08:10:03	77.723
07/23/02	08:11:03	77.553
07/23/02	08:12:03	77.126
07/23/02	08:13:03	77.666
07/23/02	08:14:03	77.837
07/23/02	08:15:03	76.984
07/23/02	08:16:03	77.183
07/23/02	08:17:03	77.752
07/23/02	08:18:03	77.439
07/23/02	08:19:03	77.382
07/23/02	08:20:03	77.325
07/23/02	08:21:03	77.439
07/23/02	08:22:03	77.865
07/23/02	08:23:03	76.984
07/23/02	08:24:03	77.951
07/23/02	08:25:03	77.126
07/23/02	08:26:03	77.780
07/23/02	08:27:03	77.496
07/23/02	08:28:03	77.666
07/23/02	08:29:03	77.979
07/23/02	08:30:03	76.529
07/23/02	08:31:03	77.666
07/23/02	08:32:03	77.524
07/23/02	08:33:03	77.581
07/23/02	08:34:03	77.638
07/23/02	08:35:03	77.410
07/23/02	08:36:03	77.268
07/23/02	08:37:03	77.439
07/23/02	08:38:03	77.638
07/23/02	08:39:03	77.524
07/23/02	08:40:03	76.927
07/23/02	08:41:03	77.183
07/23/02	08:42:03	77.382
07/23/02	08:43:03	76.870
07/23/02	08:44:03	77.410
07/23/02	08:45:03	77.581
07/23/02	08:46:03	76.586
07/23/02	08:47:03	77.837
07/23/02	08:48:03	77.467
07/23/02	08:49:03	77.439
07/23/02	08:50:03	77.069
07/23/02	08:51:03	80.539
07/23/02	08:52:03	78.349
07/23/02	08:53:03	77.553
07/23/02	08:54:03	78.463
07/23/02	08:55:03	77.666
07/23/02	08:56:03	78.918
07/23/02	08:57:03	78.463
07/23/02	08:58:03	79.117
07/23/02	08:59:03	78.434
07/23/02	09:00:03	78.548
07/23/02	09:01:03	78.008
07/23/02	09:02:03	78.150
07/23/02	09:03:03	78.235
07/23/02	09:04:03	77.922
07/23/02	09:05:03	77.723
07/23/02	09:06:03	78.064
07/23/02	09:07:03	77.581
07/23/02	09:08:03	78.548
07/23/02	09:09:03	77.638
07/23/02	09:10:03	78.377
07/23/02	09:11:03	78.036
07/23/02	09:12:03	78.207
07/23/02	09:13:03	78.519
07/23/02	09:14:03	77.837
07/23/02	09:15:03	77.638
07/23/02	09:16:03	78.349
07/23/02	09:17:03	78.150
07/23/02	09:18:03	78.463
07/23/02	09:19:03	77.553
07/23/02	09:20:03	78.463
07/23/02	09:21:03	78.804
07/23/02	09:22:03	78.463
07/23/02	09:23:03	78.121
07/23/02	09:24:03	78.235
07/23/02	09:25:03	78.662
07/23/02	09:26:03	78.064
07/23/02	09:27:03	77.780
07/23/02	09:28:03	78.150
07/23/02	09:29:03	77.979
07/23/02	09:30:03	78.775
07/23/02	09:31:03	78.377
07/23/02	09:32:03	78.548
07/23/02	09:33:03	77.609
07/23/02	09:34:03	77.922
07/23/02	09:35:03	78.832
07/23/02	09:36:03	78.235
07/23/02	09:37:03	78.207
07/23/02	09:38:03	78.292
07/23/02	09:39:03	78.804
07/23/02	09:40:03	77.979
07/23/02	09:41:03	78.576
07/23/02	09:42:03	79.060
07/23/02	09:43:03	78.263
07/23/02	09:44:03	78.690
07/23/02	09:45:03	78.121
07/23/02	09:46:03	78.519
07/23/02	09:47:03	78.605
07/23/02	09:48:03	77.752
07/23/02	09:49:03	78.605
07/23/02	09:50:03	78.434
07/23/02	09:51:03	78.718
07/23/02	09:52:03	78.150
07/23/02	09:53:03	78.974
07/23/02	09:54:03	78.121
07/23/02	09:55:03	77.808
07/23/02	09:56:03	78.775
07/23/02	09:57:03	78.747
07/23/02	09:58:03	78.377
07/23/02	09:59:03	77.752
07/23/02	10:00:03	78.548
07/23/02	10:01:03	78.320
07/23/02	10:02:03	78.434
07/23/02	10:03:03	78.463
07/23/02	10:04:03	78.974
07/23/02	10:05:03	78.121
07/23/02	10:06:03	78.747
07/23/02	10:07:03	78.207
07/23/02	10:08:03	78.292
07/23/02	10:09:03	78.775
07/23/02	10:10:03	78.349
07/23/02	10:11:03	78.235
07/23/02	10:12:03	78.662
07/23/02	10:13:03	78.377
07/23/02	10:14:03	78.832
07/23/02	10:15:03	78.150
07/23/02	10:16:03	79.259

CRADDOCK AND RANCH ROAD 12 - NO. 7157 cont.

Date	Time	Pres (PSI)
07/23/02	10:17:03	78.747
07/23/02	10:18:03	78.178
07/23/02	10:19:03	78.548
07/23/02	10:20:03	77.524
07/23/02	10:21:03	78.804
07/23/02	10:22:03	78.690
07/23/02	10:23:03	79.031
07/23/02	10:24:03	78.406
07/23/02	10:25:03	78.263
07/23/02	10:26:03	78.747
07/23/02	10:27:03	78.946
07/23/02	10:28:03	77.780
07/23/02	10:29:03	78.974
07/23/02	10:30:03	78.775
07/23/02	10:31:03	78.349
07/23/02	10:32:03	78.633
07/23/02	10:33:03	78.861
07/23/02	10:34:03	78.292
07/23/02	10:35:03	78.292
07/23/02	10:36:03	78.519
07/23/02	10:37:03	78.292
07/23/02	10:38:03	77.979
07/23/02	10:39:03	78.235
07/23/02	10:40:03	78.918
07/23/02	10:41:03	78.292
07/23/02	10:42:03	78.747
07/23/02	10:43:03	78.064
07/23/02	10:44:03	78.519
07/23/02	10:45:03	79.202
07/23/02	10:46:03	78.832
07/23/02	10:47:03	78.804
07/23/02	10:48:03	78.434
07/23/02	10:49:03	78.747
07/23/02	10:50:03	73.855
07/23/02	10:51:03	79.117
07/23/02	10:52:03	78.690
07/23/02	10:53:03	78.804
07/23/02	10:54:03	78.832
07/23/02	10:55:03	78.832
07/23/02	10:56:03	76.244
07/23/02	10:57:03	76.671
07/23/02	10:58:03	76.415
07/23/02	10:59:03	77.097
07/23/02	11:00:03	77.382
07/23/02	11:01:03	76.984
07/23/02	11:02:03	62.793
07/23/02	11:03:03	72.320
07/23/02	11:04:03	69.476
07/23/02	11:05:03	69.817
07/23/02	11:06:03	70.187
07/23/02	11:07:03	70.244
07/23/02	11:08:03	70.301
07/23/02	11:09:03	69.675
07/23/02	11:10:03	69.334
07/23/02	11:11:03	69.504
07/23/02	11:12:03	69.988
07/23/02	11:13:03	69.675
07/23/02	11:14:03	69.504
07/23/02	11:15:03	69.504
07/23/02	11:16:03	69.647
07/23/02	11:17:03	69.277
07/23/02	11:18:03	69.874
07/23/02	11:19:03	70.187
07/23/02	11:20:03	70.301
07/23/02	11:21:03	71.979
07/23/02	11:22:03	74.424
07/23/02	11:23:03	76.614
07/23/02	11:24:03	75.988
07/23/02	11:25:03	76.045
07/23/02	11:26:03	76.387
07/23/02	11:27:03	76.301
07/23/02	11:28:03	75.846
07/23/02	11:29:03	75.960
07/23/02	11:30:03	76.671
07/23/02	11:31:03	76.301
07/23/02	11:32:03	75.533
07/23/02	11:33:03	75.761
07/23/02	11:34:03	75.107
07/23/02	11:35:03	76.756
07/23/02	11:36:03	74.965
07/23/02	11:37:03	75.789
07/23/02	11:38:03	75.420
07/23/02	11:39:03	75.420
07/23/02	11:40:03	75.619
07/23/02	11:41:03	76.756
07/23/02	11:42:03	75.448
07/23/02	11:43:03	76.557
07/23/02	11:44:03	75.533
07/23/02	11:45:03	75.420
07/23/02	11:46:03	76.045
07/23/02	11:47:03	74.851
07/23/02	11:48:03	75.619
07/23/02	11:49:03	75.334
07/23/02	11:50:03	75.903
07/23/02	11:51:03	75.619
07/23/02	11:52:03	75.249
07/23/02	11:53:03	77.325
07/23/02	11:54:03	77.467
07/23/02	11:55:03	76.216
07/23/02	11:56:03	76.472
07/23/02	11:57:03	76.927
07/23/02	11:58:03	77.041
07/23/02	11:59:03	77.097
07/23/02	12:00:03	76.756
07/23/02	12:01:03	76.159
07/23/02	12:02:03	77.467
07/23/02	12:03:03	76.529
07/23/02	12:04:03	76.586
07/23/02	12:05:03	76.614
07/23/02	12:06:03	76.614
07/23/02	12:07:03	76.927
07/23/02	12:08:03	68.793
07/23/02	12:09:03	71.040
07/23/02	12:10:03	71.495
07/23/02	12:11:03	71.609
07/23/02	12:12:03	71.694
07/23/02	12:13:03	71.211
07/23/02	12:14:03	71.040
07/23/02	12:15:03	71.125
07/23/02	12:16:03	70.727
07/23/02	12:17:03	78.576
07/23/02	12:18:03	76.045
07/23/02	12:19:03	77.183
07/23/02	12:20:03	76.387
07/23/02	12:21:03	76.131
07/23/02	12:22:03	77.069
07/23/02	12:23:03	75.988
07/23/02	12:24:03	76.330
07/23/02	12:25:03	76.301
07/23/02	12:26:03	76.415
07/23/02	12:27:03	75.903
07/23/02	12:28:03	76.216
07/23/02	12:29:03	76.728
07/23/02	12:30:03	76.216
07/23/02	12:31:03	76.301
07/23/02	12:32:03	77.353
07/23/02	12:33:03	78.519
07/23/02	12:34:03	80.937
07/23/02	12:35:03	80.169
07/23/02	12:36:03	80.226
07/23/02	12:37:03	81.136
07/23/02	12:38:03	80.510
07/23/02	12:39:03	81.164
07/23/02	12:40:03	80.368
07/23/02	12:41:03	81.079
07/23/02	12:42:03	81.193
07/23/02	12:43:03	80.396
07/23/02	12:44:03	80.197
07/23/02	12:45:03	80.681
07/23/02	12:46:03	80.539
07/23/02	12:47:03	80.738
07/23/02	12:48:03	81.050
07/23/02	12:49:03	80.908
07/23/02	12:50:03	80.425
07/23/02	12:51:03	80.851
07/23/02	12:52:03	81.193
07/23/02	12:53:03	80.795
07/23/02	12:54:03	81.164
07/23/02	12:55:03	80.311
07/23/02	12:56:03	80.823
07/23/02	12:57:03	80.738
07/23/02	12:58:03	80.624
07/23/02	12:59:03	80.624
07/23/02	13:00:03	81.136
07/23/02	13:01:03	80.823
07/23/02	13:02:03	81.221
07/23/02	13:03:03	81.335
07/23/02	13:04:03	80.795
07/23/02	13:05:03	80.937
07/23/02	13:06:03	80.795
07/23/02	13:07:03	80.738
07/23/02	13:08:03	80.197
07/23/02	13:09:03	80.453
07/23/02	13:10:03	80.624
07/23/02	13:11:03	80.510
07/23/02	13:12:03	81.221
07/23/02	13:13:03	80.112
07/23/02	13:14:03	80.823
07/23/02	13:15:03	80.567
07/23/02	13:16:03	80.709
07/23/02	13:17:03	81.022
07/23/02	13:18:03	80.283
07/23/02	13:19:03	80.226
07/23/02	13:20:03	80.396
07/23/02	13:21:03	80.937
07/23/02	13:22:03	80.595
07/23/02	13:23:03	81.079
07/23/02	13:24:03	80.539
07/23/02	13:25:03	80.425
07/23/02	13:26:03	80.795
07/23/02	13:27:03	80.169
07/23/02	13:28:03	80.908
07/23/02	13:29:03	80.567
07/23/02	13:30:03	80.169
07/23/02	13:31:03	80.226
07/23/02	13:32:03	80.908
07/23/02	13:33:03	80.510
07/23/02	13:34:03	80.795
07/23/02	13:35:03	80.453
07/23/02	13:36:03	80.851
07/23/02	13:37:03	80.709
07/23/02	13:38:03	80.851
07/23/02	13:39:03	80.539
07/23/02	13:40:03	81.022
07/23/02	13:41:03	80.197
07/23/02	13:42:03	80.396
07/23/02	13:43:03	80.510
07/23/02	13:44:03	81.050
07/23/02	13:45:03	79.828
07/23/02	13:46:03	81.250
07/23/02	13:47:03	80.965
07/23/02	13:48:03	80.539
07/23/02	13:49:03	80.567
07/23/02	13:50:03	80.709
07/23/02	13:51:03	80.851
07/23/02	13:52:03	81.022
07/23/02	13:53:03	81.363
07/23/02	13:54:03	80.681
07/23/02	13:55:03	81.079
07/23/02	13:56:03	80.652
07/23/02	13:57:03	80.140
07/23/02	13:58:03	80.368
07/23/02	13:59:03	81.022
07/23/02	14:00:03	80.624
07/23/02	14:01:03	80.937
07/23/02	14:02:03	80.681
07/23/02	14:03:03	80.567
07/23/02	14:04:03	80.425
07/23/02	14:05:03	80.709
07/23/02	14:06:03	80.539
07/23/02	14:07:03	81.193
07/23/02	14:08:03	80.425
07/23/02	14:09:03	80.652
07/23/02	14:10:03	81.335
07/23/02	14:11:03	80.453
07/23/02	14:12:03	80.851
07/23/02	14:13:03	80.994
07/23/02	14:14:03	81.107
07/23/02	14:15:03	81.534
07/23/02	14:16:03	81.392
07/23/02	14:17:03	80.766
07/23/02	14:18:03	81.250
07/23/02	14:19:03	80.795
07/23/02	14:20:03	81.306
07/23/02	14:21:03	80.709
07/23/02	14:22:03	81.449
07/23/02	14:23:03	80.795
07/23/02	14:24:03	80.539
07/23/02	14:25:03	81.562
07/23/02	14:26:03	80.595
07/23/02	14:27:03	80.851
07/23/02	14:28:03	81.733
07/23/02	14:29:03	81.306
07/23/02	14:30:03	80.709
07/23/02	14:31:03	80.937
07/23/02	14:32:03	81.050
07/23/02	14:33:03	81.505
07/23/02	14:34:03	81.420
07/23/02	14:35:03	80.937
07/23/02	14:36:03	81.250
07/23/02	14:37:03	80.681
07/23/02	14:38:03	81.050
07/23/02	14:39:03	80.795
07/23/02	14:40:03	80.937

CRADDOCK AND RANCH ROAD 12 - NO. 7157 cont.

Date	Time	Pres (PSI)
07/23/02	14:41:03	80.937
07/23/02	14:42:03	77.979
07/23/02	14:43:03	76.358
07/23/02	14:44:03	78.036
07/23/02	14:45:03	64.414
07/23/02	14:46:03	65.893
07/23/02	14:47:03	65.665
07/23/02	14:48:03	65.466
07/23/02	14:49:03	65.921
07/23/02	14:50:03	65.352
07/23/02	14:51:03	65.864
07/23/02	14:52:03	65.665
07/23/02	14:53:03	65.352
07/23/02	14:54:03	65.494
07/23/02	14:55:03	65.381
07/23/02	14:56:03	64.926
07/23/02	14:57:03	64.926
07/23/02	14:58:03	65.068
07/23/02	14:59:03	64.158
07/23/02	15:00:03	64.926
07/23/02	15:01:03	64.499
07/23/02	15:02:03	64.926
07/23/02	15:03:03	64.727
07/23/02	15:04:03	64.812
07/23/02	15:05:03	70.983
07/23/02	15:06:03	79.174
07/23/02	15:07:03	74.026
07/23/02	15:08:03	76.387
07/23/02	15:09:03	75.391
07/23/02	15:10:03	75.277
07/23/02	15:11:03	76.017
07/23/02	15:12:03	76.131
07/23/02	15:13:03	76.614
07/23/02	15:14:03	75.846
07/23/02	15:15:03	76.614
07/23/02	15:16:03	75.960
07/23/02	15:17:03	76.358
07/23/02	15:18:03	76.529
07/23/02	15:19:03	76.159
07/23/02	15:20:03	75.078
07/23/02	15:21:03	76.358
07/23/02	15:22:03	75.647
07/23/02	15:23:03	76.557
07/23/02	15:24:03	76.216
07/23/02	15:25:03	76.699
07/23/02	15:26:03	74.623
07/23/02	15:27:03	76.387
07/23/02	15:28:03	75.533
07/23/02	15:29:03	75.931
07/23/02	15:30:03	76.671
07/23/02	15:31:03	76.529
07/23/02	15:32:03	67.428
07/23/02	15:33:03	62.139
07/23/02	15:34:03	63.248
07/23/02	15:35:03	62.907
07/23/02	15:36:03	63.276
07/23/02	15:37:03	63.532
07/23/02	15:38:03	63.873
07/23/02	15:39:03	63.561
07/23/02	15:40:03	63.504
07/23/02	15:41:03	63.674
07/23/02	15:42:03	63.390
07/23/02	15:43:03	63.248
07/23/02	15:44:03	62.935
07/23/02	15:45:03	62.821
07/23/02	15:46:03	61.940
07/23/02	15:47:03	62.395
07/23/02	15:48:03	62.565
07/23/02	15:49:03	62.793
07/23/02	15:50:03	62.992
07/23/02	15:51:03	64.471
07/23/02	15:52:03	74.822
07/23/02	15:53:03	74.623
07/23/02	15:54:03	86.681
07/23/02	15:55:03	82.615
07/23/02	15:56:03	81.875
07/23/02	15:57:03	82.103
07/23/02	15:58:03	81.790
07/23/02	15:59:03	82.074
07/23/02	16:00:03	82.074
07/23/02	16:01:03	82.017
07/23/02	16:02:03	81.932
07/23/02	16:03:03	81.534
07/23/02	16:04:03	81.449
07/23/02	16:05:03	81.932
07/23/02	16:06:03	81.676
07/23/02	16:07:03	81.477
07/23/02	16:08:03	82.615
07/23/02	16:09:03	82.416
07/23/02	16:10:03	82.387
07/23/02	16:11:03	82.757
07/23/02	16:12:03	83.013
07/23/02	16:13:03	82.330
07/23/02	16:14:03	82.387
07/23/02	16:15:03	81.932
07/23/02	16:16:03	81.961
07/23/02	16:17:03	55.114
07/23/02	16:18:03	84.861
07/23/02	16:19:03	73.571
07/23/02	16:20:03	75.192
07/23/02	16:21:03	77.581
07/23/02	16:22:03	74.652
07/23/02	16:23:03	76.387
07/23/02	16:24:03	76.273
07/23/02	16:25:03	75.619
07/23/02	16:26:03	76.159
07/23/02	16:27:03	76.273
07/23/02	16:28:03	75.761
07/23/02	16:29:03	76.017
07/23/02	16:30:03	76.017
07/23/02	16:31:03	76.443
07/23/02	16:32:03	93.763
07/23/02	16:33:03	81.050
07/23/02	16:34:03	80.937
07/23/02	16:35:03	80.311
07/23/02	16:36:03	80.709
07/23/02	16:37:03	80.937
07/23/02	16:38:03	80.539
07/23/02	16:39:03	80.510
07/23/02	16:40:03	79.913
07/23/02	16:41:03	81.107
07/23/02	16:42:03	81.335
07/23/02	16:43:03	80.311
07/23/02	16:44:03	80.795
07/23/02	16:45:03	80.368
07/23/02	16:46:03	80.624
07/23/02	16:47:03	80.027
07/23/02	16:48:03	80.226
07/23/02	16:49:03	80.254
07/23/02	16:50:03	80.652
07/23/02	16:51:03	80.027
07/23/02	16:52:03	80.709
07/23/02	16:53:03	80.965
07/23/02	16:54:03	80.823
07/23/02	16:55:03	80.283
07/23/02	16:56:03	79.828
07/23/02	16:57:03	79.970
07/23/02	16:58:03	80.197
07/23/02	16:59:03	79.941
07/23/02	17:00:03	80.453
07/23/02	17:01:03	80.254
07/23/02	17:02:03	80.453
07/23/02	17:03:03	80.823
07/23/02	17:04:03	81.022
07/23/02	17:05:03	80.567
07/23/02	17:06:03	80.311
07/23/02	17:07:03	80.652
07/23/02	17:08:03	80.283
07/23/02	17:09:03	80.368
07/23/02	17:10:03	80.169
07/23/02	17:11:03	80.510
07/23/02	17:12:03	79.970
07/23/02	17:13:03	80.396
07/23/02	17:14:03	80.027
07/23/02	17:15:03	79.998
07/23/02	17:16:03	80.112
07/23/02	17:17:03	80.055
07/23/02	17:18:03	80.539
07/23/02	17:19:03	80.368
07/23/02	17:20:03	80.396
07/23/02	17:21:03	79.970
07/23/02	17:22:03	80.112
07/23/02	17:23:03	80.738
07/23/02	17:24:03	80.368
07/23/02	17:25:03	79.572
07/23/02	17:26:03	79.913
07/23/02	17:27:03	80.112
07/23/02	17:28:03	79.771
07/23/02	17:29:03	80.140
07/23/02	17:30:03	80.027
07/23/02	17:31:03	80.340
07/23/02	17:32:03	80.510
07/23/02	17:33:03	80.283
07/23/02	17:34:03	79.884
07/23/02	17:35:03	80.197
07/23/02	17:36:03	80.197
07/23/02	17:37:03	80.226
07/23/02	17:38:03	80.226
07/23/02	17:39:03	79.174
07/23/02	17:40:03	79.941
07/23/02	17:41:03	79.856
07/23/02	17:42:03	80.254
07/23/02	17:43:03	79.629
07/23/02	17:44:03	80.226
07/23/02	17:45:03	79.486
07/23/02	17:46:03	79.970
07/23/02	17:47:03	80.396
07/23/02	17:48:03	79.401
07/23/02	17:49:03	80.368
07/23/02	17:50:03	80.340
07/23/02	17:51:03	79.970
07/23/02	17:52:03	79.771
07/23/02	17:53:03	80.510
07/23/02	17:54:03	80.197
07/23/02	17:55:03	80.425
07/23/02	17:56:03	79.401
07/23/02	17:57:03	79.828
07/23/02	17:58:03	79.998
07/23/02	17:59:03	80.140
07/23/02	18:00:03	80.283
07/23/02	18:01:03	80.169
07/23/02	18:02:03	80.425
07/23/02	18:03:03	79.828
07/23/02	18:04:03	79.913
07/23/02	18:05:03	80.027
07/23/02	18:06:03	79.941
07/23/02	18:07:03	80.652
07/23/02	18:08:03	79.657
07/23/02	18:09:03	79.259
07/23/02	18:10:03	79.572
07/23/02	18:11:03	79.629
07/23/02	18:12:03	79.913
07/23/02	18:13:03	80.254
07/23/02	18:14:03	79.913
07/23/02	18:15:03	80.140
07/23/02	18:16:03	80.396
07/23/02	18:17:03	79.884
07/23/02	18:18:03	80.624
07/23/02	18:19:03	80.425
07/23/02	18:20:03	80.254
07/23/02	18:21:03	80.226
07/23/02	18:22:03	80.823
07/23/02	18:23:03	80.140
07/23/02	18:24:03	80.254
07/23/02	18:25:03	80.425
07/23/02	18:26:03	80.340
07/23/02	18:27:03	80.539
07/23/02	18:28:03	79.998
07/23/02	18:29:03	80.937
07/23/02	18:30:03	80.453
07/23/02	18:31:03	80.226
07/23/02	18:32:03	79.828
07/23/02	18:33:03	80.197
07/23/02	18:34:03	81.392
07/23/02	18:35:03	80.681
07/23/02	18:36:03	80.425
07/23/02	18:37:03	80.795
07/23/02	18:38:03	80.823
07/23/02	18:39:03	80.226
07/23/02	18:40:03	81.079
07/23/02	18:41:03	80.624
07/23/02	18:42:03	80.681
07/23/02	18:43:03	80.709
07/23/02	18:44:03	80.652
07/23/02	18:45:03	80.851
07/23/02	18:46:03	80.453
07/23/02	18:47:03	80.709
07/23/02	18:48:03	81.022
07/23/02	18:49:03	81.079
07/23/02	18:50:03	80.595
07/23/02	18:51:03	81.335
07/23/02	18:52:03	80.595
07/23/02	18:53:03	80.709
07/23/02	18:54:03	81.591
07/23/02	18:55:03	80.709
07/23/02	18:56:03	81.477
07/23/02	18:57:03	80.340
07/23/02	18:58:03	81.335
07/23/02	18:59:03	81.079
07/23/02	19:00:03	80.709
07/23/02	19:01:03	79.856
07/23/02	19:02:03	80.510
07/23/02	19:03:03	81.306
07/23/02	19:04:03	80.595

CRADDOCK AND RANCH ROAD 12 - NO. 7157 cont.

Date	Time	Pres (PSI)
07/23/02	19:05:03	81.079
07/23/02	19:06:03	79.543
07/23/02	19:07:03	80.851
07/23/02	19:08:03	81.022
07/23/02	19:09:03	81.022
07/23/02	19:10:03	81.022
07/23/02	19:11:03	81.022
07/23/02	19:12:03	80.453
07/23/02	19:13:03	80.396
07/23/02	19:14:03	80.453
07/23/02	19:15:03	80.937
07/23/02	19:16:03	80.738
07/23/02	19:17:03	81.107
07/23/02	19:18:03	81.676
07/23/02	19:19:03	81.250
07/23/02	19:20:03	81.306
07/23/02	19:21:03	81.164
07/23/02	19:22:03	81.449
07/23/02	19:23:03	80.908
07/23/02	19:24:03	81.562
07/23/02	19:25:03	81.761
07/23/02	19:26:03	81.136
07/23/02	19:27:03	81.306
07/23/02	19:28:03	81.050
07/23/02	19:29:03	81.363
07/23/02	19:30:03	81.164
07/23/02	19:31:03	81.505
07/23/02	19:32:03	80.652
07/23/02	19:33:03	81.420
07/23/02	19:34:03	81.306
07/23/02	19:35:03	80.994
07/23/02	19:36:03	80.709
07/23/02	19:37:03	81.335
07/23/02	19:38:03	81.420
07/23/02	19:39:03	81.449
07/23/02	19:40:03	81.505
07/23/02	19:41:03	81.392
07/23/02	19:42:03	80.624
07/23/02	19:43:03	81.136
07/23/02	19:44:03	81.420
07/23/02	19:45:03	81.363
07/23/02	19:46:03	81.761
07/23/02	19:47:03	81.164
07/23/02	19:48:03	81.136
07/23/02	19:49:03	81.705
07/23/02	19:50:03	80.908
07/23/02	19:51:03	81.619
07/23/02	19:52:03	81.705
07/23/02	19:53:03	80.994
07/23/02	19:54:03	81.335
07/23/02	19:55:03	81.562
07/23/02	19:56:03	80.624
07/23/02	19:57:03	80.595
07/23/02	19:58:03	81.079
07/23/02	19:59:03	81.050
07/23/02	20:00:03	81.050
07/23/02	20:01:03	81.193
07/23/02	20:02:03	81.221
07/23/02	20:03:03	81.505
07/23/02	20:04:03	81.847
07/23/02	20:05:03	81.562
07/23/02	20:06:03	81.477
07/23/02	20:07:03	82.074
07/23/02	20:08:03	81.733
07/23/02	20:09:03	81.420
07/23/02	20:10:03	82.103
07/23/02	20:11:03	81.676
07/23/02	20:12:03	81.562
07/23/02	20:13:03	81.363
07/23/02	20:14:03	81.477
07/23/02	20:15:03	81.619
07/23/02	20:16:03	80.823
07/23/02	20:17:03	81.591
07/23/02	20:18:03	80.624
07/23/02	20:19:03	81.420
07/23/02	20:20:03	81.449
07/23/02	20:21:03	81.079
07/23/02	20:22:03	81.505
07/23/02	20:23:03	81.733
07/23/02	20:24:03	81.562
07/23/02	20:25:03	81.335
07/23/02	20:26:03	81.136
07/23/02	20:27:03	81.705
07/23/02	20:28:03	81.193
07/23/02	20:29:03	80.937
07/23/02	20:30:03	81.705
07/23/02	20:31:03	81.619
07/23/02	20:32:03	81.477
07/23/02	20:33:03	81.961
07/23/02	20:34:03	82.216
07/23/02	20:35:03	81.363
07/23/02	20:36:03	80.795
07/23/02	20:37:03	81.818
07/23/02	20:38:03	81.790
07/23/02	20:39:03	81.989
07/23/02	20:40:03	81.534
07/23/02	20:41:03	81.562
07/23/02	20:42:03	81.676
07/23/02	20:43:03	81.676
07/23/02	20:44:03	81.932
07/23/02	20:45:03	81.875
07/23/02	20:46:03	81.619
07/23/02	20:47:03	81.761
07/23/02	20:48:03	81.847
07/23/02	20:49:03	81.335
07/23/02	20:50:03	81.790
07/23/02	20:51:03	81.932
07/23/02	20:52:03	81.505
07/23/02	20:53:03	82.103
07/23/02	20:54:03	82.586
07/23/02	20:55:03	81.961
07/23/02	20:56:03	82.017
07/23/02	20:57:03	63.674
07/23/02	20:58:03	80.510
07/23/02	20:59:03	78.747
07/23/02	21:00:03	78.036
07/23/02	21:01:03	76.870
07/23/02	21:02:03	77.240
07/23/02	21:03:03	77.951
07/23/02	21:04:03	77.240
07/23/02	21:05:03	77.638
07/23/02	21:06:03	78.292
07/23/02	21:07:03	77.126
07/23/02	21:08:03	77.666
07/23/02	21:09:03	77.467
07/23/02	21:10:03	77.837
07/23/02	21:11:03	78.605
07/23/02	21:12:03	76.756
07/23/02	21:13:03	78.406
07/23/02	21:14:03	76.415
07/23/02	21:15:03	77.524
07/23/02	21:16:03	76.927
07/23/02	21:17:03	78.036
07/23/02	21:18:03	78.406
07/23/02	21:19:03	77.553
07/23/02	21:20:03	78.008
07/23/02	21:21:03	78.832
07/23/02	21:22:03	77.553
07/23/02	21:23:03	77.808
07/23/02	21:24:03	78.178
07/23/02	21:25:03	77.553
07/23/02	21:26:03	78.121
07/23/02	21:27:03	77.638
07/23/02	21:28:03	77.808
07/23/02	21:29:03	77.524
07/23/02	21:30:03	77.951
07/23/02	21:31:03	76.984
07/23/02	21:32:03	78.207
07/23/02	21:33:03	77.041
07/23/02	21:34:03	78.235
07/23/02	21:35:03	77.154
07/23/02	21:36:03	77.496
07/23/02	21:37:03	78.150
07/23/02	21:38:03	77.524
07/23/02	21:39:03	78.150
07/23/02	21:40:03	77.240
07/23/02	21:41:03	77.723
07/23/02	21:42:03	76.728
07/23/02	21:43:03	77.211
07/23/02	21:44:03	77.524
07/23/02	21:45:03	77.353
07/23/02	21:46:03	77.240
07/23/02	21:47:03	77.638
07/23/02	21:48:03	77.154
07/23/02	21:49:03	76.813
07/23/02	21:50:03	78.576
07/23/02	21:51:03	78.207
07/23/02	21:52:03	78.178
07/23/02	21:53:03	77.951
07/23/02	21:54:03	77.979
07/23/02	21:55:03	77.922
07/23/02	21:56:03	77.524
07/23/02	21:57:03	77.808
07/23/02	21:58:03	78.121
07/23/02	21:59:03	77.638
07/23/02	22:00:03	78.349
07/23/02	22:01:03	77.638
07/23/02	22:02:03	77.012
07/23/02	22:03:03	77.894
07/23/02	22:04:03	78.235
07/23/02	22:05:03	77.553
07/23/02	22:06:03	77.553
07/23/02	22:07:03	77.922
07/23/02	22:08:03	77.183
07/23/02	22:09:03	77.723
07/23/02	22:10:03	77.553
07/23/02	22:11:03	77.325
07/23/02	22:12:03	78.121
07/23/02	22:13:03	76.870
07/23/02	22:14:03	77.382
07/23/02	22:15:03	78.320
07/23/02	22:16:03	76.671
07/23/02	22:17:03	77.922
07/23/02	22:18:03	77.609
07/23/02	22:19:03	78.036
07/23/02	22:20:03	77.467
07/23/02	22:21:03	77.467
07/23/02	22:22:03	78.406
07/23/02	22:23:03	78.235
07/23/02	22:24:03	76.728
07/23/02	22:25:03	78.463
07/23/02	22:26:03	76.131
07/23/02	22:27:03	78.406
07/23/02	22:28:03	77.353
07/23/02	22:29:03	77.325
07/23/02	22:30:03	76.301
07/23/02	22:31:03	77.780
07/23/02	22:32:03	76.244
07/23/02	22:33:03	77.780
07/23/02	22:34:03	77.240
07/23/02	22:35:03	76.927
07/23/02	22:36:03	76.756
07/23/02	22:37:03	77.894
07/23/02	22:38:03	76.529
07/23/02	22:39:03	77.780
07/23/02	22:40:03	78.263
07/23/02	22:41:03	76.159
07/23/02	22:42:03	78.519
07/23/02	22:43:03	77.865
07/23/02	22:44:03	77.439
07/23/02	22:45:03	77.240
07/23/02	22:46:03	77.439
07/23/02	22:47:03	77.240
07/23/02	22:48:03	77.951
07/23/02	22:49:03	76.870
07/23/02	22:50:03	77.780
07/23/02	22:51:03	77.069
07/23/02	22:52:03	77.410
07/23/02	22:53:03	76.927
07/23/02	22:54:03	77.951
07/23/02	22:55:03	77.410
07/23/02	22:56:03	77.894
07/23/02	22:57:03	77.467
07/23/02	22:58:03	77.894
07/23/02	22:59:03	77.211
07/23/02	23:00:03	77.752
07/23/02	23:01:03	77.609
07/23/02	23:02:03	76.813
07/23/02	23:03:03	77.353
07/23/02	23:04:03	77.808
07/23/02	23:05:03	77.410
07/23/02	23:06:03	77.268
07/23/02	23:07:03	77.553
07/23/02	23:08:03	77.496
07/23/02	23:09:03	78.292
07/23/02	23:10:03	77.240
07/23/02	23:11:03	77.410
07/23/02	23:12:03	76.955
07/23/02	23:13:03	78.150
07/23/02	23:14:03	77.894
07/23/02	23:15:03	77.837
07/23/02	23:16:03	78.121
07/23/02	23:17:03	77.609
07/23/02	23:18:03	77.609
07/23/02	23:19:03	78.064
07/23/02	23:20:03	77.723
07/23/02	23:21:03	77.951
07/23/02	23:22:03	77.808
07/23/02	23:23:03	78.064
07/23/02	23:24:03	76.273
07/23/02	23:25:03	78.008
07/23/02	23:26:03	77.211
07/23/02	23:27:03	77.353
07/23/02	23:28:03	77.951

CRADDOCK AND RANCH ROAD 12 - NO. 7157 cont.

Date	Time	Pres (PSI)
07/23/02	23:29:03	77.382
07/23/02	23:30:03	76.728
07/23/02	23:31:03	77.922
07/23/02	23:32:03	77.240
07/23/02	23:33:03	77.752
07/23/02	23:34:03	78.804
07/23/02	23:35:03	77.069
07/23/02	23:36:03	78.207
07/23/02	23:37:03	77.325
07/23/02	23:38:03	78.320
07/23/02	23:39:03	77.325
07/23/02	23:40:03	77.752
07/23/02	23:41:03	78.463
07/23/02	23:42:03	77.553
07/23/02	23:43:03	77.723
07/23/02	23:44:03	78.349
07/23/02	23:45:03	77.353
07/23/02	23:46:03	78.377
07/23/02	23:47:03	77.041
07/23/02	23:48:03	78.576
07/23/02	23:49:03	77.183
07/23/02	23:50:03	77.410
07/23/02	23:51:03	78.008
07/23/02	23:52:03	77.609
07/23/02	23:53:03	77.353
07/23/02	23:54:03	78.576
07/23/02	23:55:03	77.467
07/23/02	23:56:03	77.979
07/23/02	23:57:03	78.349
07/23/02	23:58:03	77.183
07/23/02	23:59:03	77.524
07/24/02	00:00:03	77.268
07/24/02	00:01:03	78.548
07/24/02	00:02:03	77.268
07/24/02	00:03:03	77.410
07/24/02	00:04:03	77.496
07/24/02	00:05:03	77.353
07/24/02	00:06:03	77.268
07/24/02	00:07:03	77.553
07/24/02	00:08:03	77.467
07/24/02	00:09:03	78.263
07/24/02	00:10:03	77.211
07/24/02	00:11:03	77.240
07/24/02	00:12:03	78.178
07/24/02	00:13:03	77.410
07/24/02	00:14:03	77.496
07/24/02	00:15:03	78.064
07/24/02	00:16:03	76.728
07/24/02	00:17:03	78.320
07/24/02	00:18:03	77.211
07/24/02	00:19:03	77.609
07/24/02	00:20:03	77.353
07/24/02	00:21:03	77.951
07/24/02	00:22:03	77.496
07/24/02	00:23:03	77.410
07/24/02	00:24:03	77.410
07/24/02	00:25:03	78.008
07/24/02	00:26:03	76.785
07/24/02	00:27:03	78.292
07/24/02	00:28:03	77.666
07/24/02	00:29:03	77.183
07/24/02	00:30:03	78.064
07/24/02	00:31:03	78.064
07/24/02	00:32:03	77.439
07/24/02	00:33:03	77.240
07/24/02	00:34:03	77.808
07/24/02	00:35:03	77.723
07/24/02	00:36:03	77.382
07/24/02	00:37:03	77.808
07/24/02	00:38:03	77.240
07/24/02	00:39:03	77.837
07/24/02	00:40:03	77.780
07/24/02	00:41:03	77.723
07/24/02	00:42:03	76.927
07/24/02	00:43:03	77.666
07/24/02	00:44:03	77.865
07/24/02	00:45:03	77.638
07/24/02	00:46:03	77.609
07/24/02	00:47:03	77.837
07/24/02	00:48:03	77.069
07/24/02	00:49:03	77.979
07/24/02	00:50:03	76.927
07/24/02	00:51:03	82.017
07/24/02	00:52:03	75.135
07/24/02	00:53:03	79.884
07/24/02	00:54:03	77.638
07/24/02	00:55:03	77.979
07/24/02	00:56:03	78.662
07/24/02	00:57:03	78.121
07/24/02	00:58:03	78.804
07/24/02	00:59:03	77.979
07/24/02	01:00:03	78.690
07/24/02	01:01:03	78.207
07/24/02	01:02:03	78.548
07/24/02	01:03:03	78.519
07/24/02	01:04:03	78.861
07/24/02	01:05:03	77.638
07/24/02	01:06:03	78.576
07/24/02	01:07:03	78.548
07/24/02	01:08:03	78.235
07/24/02	01:09:03	77.752
07/24/02	01:10:03	78.974
07/24/02	01:11:03	78.434
07/24/02	01:12:03	78.519
07/24/02	01:13:03	78.235
07/24/02	01:14:03	78.292
07/24/02	01:15:03	78.349
07/24/02	01:16:03	78.519
07/24/02	01:17:03	78.519
07/24/02	01:18:03	77.979
07/24/02	01:19:03	79.145
07/24/02	01:20:03	77.808
07/24/02	01:21:03	78.690
07/24/02	01:22:03	77.894
07/24/02	01:23:03	78.178
07/24/02	01:24:03	78.804
07/24/02	01:25:03	78.235
07/24/02	01:26:03	78.548
07/24/02	01:27:03	78.832
07/24/02	01:28:03	78.036
07/24/02	01:29:03	78.235
07/24/02	01:30:03	78.064
07/24/02	01:31:03	78.548
07/24/02	01:32:03	78.861
07/24/02	01:33:03	78.036
07/24/02	01:34:03	78.861
07/24/02	01:35:03	78.235
07/24/02	01:36:03	77.922
07/24/02	01:37:03	78.576
07/24/02	01:38:03	78.804
07/24/02	01:39:03	78.121
07/24/02	01:40:03	78.519
07/24/02	01:41:03	78.263
07/24/02	01:42:03	78.463
07/24/02	01:43:03	78.008
07/24/02	01:44:03	78.349
07/24/02	01:45:03	79.003
07/24/02	01:46:03	78.377
07/24/02	01:47:03	78.519
07/24/02	01:48:03	78.576
07/24/02	01:49:03	78.605
07/24/02	01:50:03	77.979
07/24/02	01:51:03	79.230
07/24/02	01:52:03	77.837
07/24/02	01:53:03	78.349
07/24/02	01:54:03	77.410
07/24/02	01:55:03	78.576
07/24/02	01:56:03	79.031
07/24/02	01:57:03	78.434
07/24/02	01:58:03	78.349
07/24/02	01:59:03	78.946
07/24/02	02:00:03	78.377
07/24/02	02:01:03	78.633
07/24/02	02:02:03	78.406
07/24/02	02:03:03	77.723
07/24/02	02:04:03	78.804
07/24/02	02:05:03	78.008
07/24/02	02:06:03	78.434
07/24/02	02:07:03	78.178
07/24/02	02:08:03	77.752
07/24/02	02:09:03	78.434
07/24/02	02:10:03	77.837
07/24/02	02:11:03	78.463
07/24/02	02:12:03	77.609
07/24/02	02:13:03	78.832
07/24/02	02:14:03	78.633
07/24/02	02:15:03	78.207
07/24/02	02:16:03	78.605
07/24/02	02:17:03	78.235
07/24/02	02:18:03	78.292
07/24/02	02:19:03	78.121
07/24/02	02:20:03	78.207
07/24/02	02:21:03	78.576
07/24/02	02:22:03	78.207
07/24/02	02:23:03	78.207
07/24/02	02:24:03	79.174
07/24/02	02:25:03	78.292
07/24/02	02:26:03	78.832
07/24/02	02:27:03	77.951
07/24/02	02:28:03	78.235
07/24/02	02:29:03	77.979
07/24/02	02:30:03	78.434
07/24/02	02:31:03	78.320
07/24/02	02:32:03	78.263
07/24/02	02:33:03	78.662
07/24/02	02:34:03	78.662
07/24/02	02:35:03	77.666
07/24/02	02:36:03	77.865
07/24/02	02:37:03	78.690
07/24/02	02:38:03	77.922
07/24/02	02:39:03	78.690
07/24/02	02:40:03	78.320
07/24/02	02:41:03	78.292
07/24/02	02:42:03	78.434
07/24/02	02:43:03	78.548
07/24/02	02:44:03	77.865
07/24/02	02:45:03	78.633
07/24/02	02:46:03	78.690
07/24/02	02:47:03	77.865
07/24/02	02:48:03	78.918
07/24/02	02:49:03	78.605
07/24/02	02:50:03	77.581
07/24/02	02:51:03	77.723
07/24/02	02:52:03	78.605
07/24/02	02:53:03	78.263
07/24/02	02:54:03	79.088
07/24/02	02:55:03	78.150
07/24/02	02:56:03	78.320
07/24/02	02:57:03	78.235
07/24/02	02:58:03	78.576
07/24/02	02:59:03	77.922
07/24/02	03:00:03	78.349
07/24/02	03:01:03	78.377
07/24/02	03:02:03	78.150
07/24/02	03:03:03	78.406
07/24/02	03:04:03	78.690
07/24/02	03:05:03	77.951
07/24/02	03:06:03	78.349
07/24/02	03:07:03	78.775
07/24/02	03:08:03	77.979
07/24/02	03:09:03	78.576
07/24/02	03:10:03	78.235
07/24/02	03:11:03	78.463
07/24/02	03:12:03	78.064
07/24/02	03:13:03	78.235
07/24/02	03:14:03	78.320
07/24/02	03:15:03	78.263
07/24/02	03:16:03	78.519
07/24/02	03:17:03	77.979
07/24/02	03:18:03	78.605
07/24/02	03:19:03	78.605
07/24/02	03:20:03	78.235
07/24/02	03:21:03	77.865
07/24/02	03:22:03	78.121
07/24/02	03:23:03	78.121
07/24/02	03:24:03	78.207
07/24/02	03:25:03	78.576
07/24/02	03:26:03	78.747
07/24/02	03:27:03	78.178
07/24/02	03:28:03	78.320
07/24/02	03:29:03	79.145
07/24/02	03:30:03	77.837
07/24/02	03:31:03	78.207
07/24/02	03:32:03	78.605
07/24/02	03:33:03	77.865
07/24/02	03:34:03	77.922
07/24/02	03:35:03	78.605
07/24/02	03:36:03	77.837
07/24/02	03:37:03	78.320
07/24/02	03:38:03	78.633
07/24/02	03:39:03	78.377
07/24/02	03:40:03	78.121
07/24/02	03:41:03	78.804
07/24/02	03:42:03	77.410
07/24/02	03:43:03	78.918
07/24/02	03:44:03	78.320
07/24/02	03:45:03	78.320
07/24/02	03:46:03	78.434
07/24/02	03:47:03	78.946
07/24/02	03:48:03	78.150
07/24/02	03:49:03	78.263
07/24/02	03:50:03	77.951
07/24/02	03:51:03	78.519
07/24/02	03:52:03	77.638

CRADDOCK AND RANCH ROAD 12 - NO. 7157 cont.

Date	Time	Pres (PSI)
07/24/02	03:53:03	78.008
07/24/02	03:54:03	78.263
07/24/02	03:55:03	78.263
07/24/02	03:56:03	78.292
07/24/02	03:57:03	78.064
07/24/02	03:58:03	78.463
07/24/02	03:59:03	78.320
07/24/02	04:00:03	77.922
07/24/02	04:01:03	78.207
07/24/02	04:02:03	78.064
07/24/02	04:03:03	77.894
07/24/02	04:04:03	78.349
07/24/02	04:05:03	78.008
07/24/02	04:06:03	78.008
07/24/02	04:07:03	78.008
07/24/02	04:08:03	77.808
07/24/02	04:09:03	78.463
07/24/02	04:10:03	78.463
07/24/02	04:11:03	78.718
07/24/02	04:12:03	78.263
07/24/02	04:13:03	78.008
07/24/02	04:14:03	78.861
07/24/02	04:15:03	78.320
07/24/02	04:16:03	78.633
07/24/02	04:17:03	78.178
07/24/02	04:18:03	77.894
07/24/02	04:19:03	78.263
07/24/02	04:20:03	78.377
07/24/02	04:21:03	78.263
07/24/02	04:22:03	78.548
07/24/02	04:23:03	77.951
07/24/02	04:24:03	78.690
07/24/02	04:25:03	78.263
07/24/02	04:26:03	78.519
07/24/02	04:27:03	79.060
07/24/02	04:28:03	77.894
07/24/02	04:29:03	78.349
07/24/02	04:30:03	78.434
07/24/02	04:31:03	78.207
07/24/02	04:32:03	78.406
07/24/02	04:33:03	78.406
07/24/02	04:34:03	78.463
07/24/02	04:35:03	78.463
07/24/02	04:36:03	78.775
07/24/02	04:37:03	78.036
07/24/02	04:38:03	78.064
07/24/02	04:39:03	78.775
07/24/02	04:40:03	78.008
07/24/02	04:41:03	78.463
07/24/02	04:42:03	78.235
07/24/02	04:43:03	78.946
07/24/02	04:44:03	78.320
07/24/02	04:45:03	78.690
07/24/02	04:46:03	78.349
07/24/02	04:47:03	78.036
07/24/02	04:48:03	78.605
07/24/02	04:49:03	77.865
07/24/02	04:50:03	78.548
07/24/02	04:51:03	78.263
07/24/02	04:52:03	78.377
07/24/02	04:53:03	78.064
07/24/02	04:54:03	78.548
07/24/02	04:55:03	78.064
07/24/02	04:56:03	78.548
07/24/02	04:57:03	78.178
07/24/02	04:58:03	78.548
07/24/02	04:59:03	78.178
07/24/02	05:00:03	78.519
07/24/02	05:01:03	77.666
07/24/02	05:02:03	77.951
07/24/02	05:03:03	78.804
07/24/02	05:04:03	77.581
07/24/02	05:05:03	78.747
07/24/02	05:06:03	78.008
07/24/02	05:07:03	78.406
07/24/02	05:08:03	77.723
07/24/02	05:09:03	78.178
07/24/02	05:10:03	78.263
07/24/02	05:11:03	78.320
07/24/02	05:12:03	78.150
07/24/02	05:13:03	78.036
07/24/02	05:14:03	78.349
07/24/02	05:15:03	78.150
07/24/02	05:16:03	78.178
07/24/02	05:17:03	78.662
07/24/02	05:18:03	78.178
07/24/02	05:19:03	78.121
07/24/02	05:20:03	78.548
07/24/02	05:21:03	78.178
07/24/02	05:22:03	78.377
07/24/02	05:23:03	78.207
07/24/02	05:24:03	77.752
07/24/02	05:25:03	78.519
07/24/02	05:26:03	77.752
07/24/02	05:27:03	77.865
07/24/02	05:28:03	78.946
07/24/02	05:29:03	78.121
07/24/02	05:30:03	78.121
07/24/02	05:31:03	79.373
07/24/02	05:32:03	77.894
07/24/02	05:33:03	78.263
07/24/02	05:34:03	78.178
07/24/02	05:35:03	78.548
07/24/02	05:36:03	78.519
07/24/02	05:37:03	78.150
07/24/02	05:38:03	78.008
07/24/02	05:39:03	78.292
07/24/02	05:40:03	78.406
07/24/02	05:41:03	78.519
07/24/02	05:42:03	77.951
07/24/02	05:43:03	78.861
07/24/02	05:44:03	77.524
07/24/02	05:45:03	78.150
07/24/02	05:46:03	78.150
07/24/02	05:47:03	77.752
07/24/02	05:48:03	78.832
07/24/02	05:49:03	77.638
07/24/02	05:50:03	78.406
07/24/02	05:51:03	78.235
07/24/02	05:52:03	78.008
07/24/02	05:53:03	77.780
07/24/02	05:54:03	78.434
07/24/02	05:55:03	77.979
07/24/02	05:56:03	78.349
07/24/02	05:57:03	77.638
07/24/02	05:58:03	78.036
07/24/02	05:59:03	78.008
07/24/02	06:00:03	78.292
07/24/02	06:01:03	78.718
07/24/02	06:02:03	78.406
07/24/02	06:03:03	78.463
07/24/02	06:04:03	77.808
07/24/02	06:05:03	78.263
07/24/02	06:06:03	78.463
07/24/02	06:07:03	77.865
07/24/02	06:08:03	78.605
07/24/02	06:09:03	78.633
07/24/02	06:10:03	77.752
07/24/02	06:11:03	78.974
07/24/02	06:12:03	78.235
07/24/02	06:13:03	77.666
07/24/02	06:14:03	78.918
07/24/02	06:15:03	78.320
07/24/02	06:16:03	77.837
07/24/02	06:17:03	78.463
07/24/02	06:18:03	78.463
07/24/02	06:19:03	78.150
07/24/02	06:20:03	77.894
07/24/02	06:21:03	78.463
07/24/02	06:22:03	78.349
07/24/02	06:23:03	78.946
07/24/02	06:24:03	78.036
07/24/02	06:25:03	78.718
07/24/02	06:26:03	78.178
07/24/02	06:27:03	77.609
07/24/02	06:28:03	77.524
07/24/02	06:29:03	78.207
07/24/02	06:30:03	78.036
07/24/02	06:31:03	78.605
07/24/02	06:32:03	78.008
07/24/02	06:33:03	77.979
07/24/02	06:34:03	78.235
07/24/02	06:35:03	78.463
07/24/02	06:36:03	84.605
07/24/02	06:37:03	78.548
07/24/02	06:38:03	78.946
07/24/02	06:39:03	79.714
07/24/02	06:40:03	78.804
07/24/02	06:41:03	79.259
07/24/02	06:42:03	78.832
07/24/02	06:43:03	78.918
07/24/02	06:44:03	79.174
07/24/02	06:45:03	78.292
07/24/02	06:46:03	78.832
07/24/02	06:47:03	78.463
07/24/02	06:48:03	79.145
07/24/02	06:49:03	78.718
07/24/02	06:50:03	78.775
07/24/02	06:51:03	79.202
07/24/02	06:52:03	78.320
07/24/02	06:53:03	79.316
07/24/02	06:54:03	79.003
07/24/02	06:55:03	78.349
07/24/02	06:56:03	78.804
07/24/02	06:57:03	78.150
07/24/02	06:58:03	79.429
07/24/02	06:59:03	79.230
07/24/02	07:00:03	78.718
07/24/02	07:01:03	78.548
07/24/02	07:02:03	79.344
07/24/02	07:03:03	78.377
07/24/02	07:04:03	78.974
07/24/02	07:05:03	79.429
07/24/02	07:06:03	79.145
07/24/02	07:07:03	79.259
07/24/02	07:08:03	79.458
07/24/02	07:09:03	78.633
07/24/02	07:10:03	79.003
07/24/02	07:11:03	79.031
07/24/02	07:12:03	78.377
07/24/02	07:13:03	79.230
07/24/02	07:14:03	78.662
07/24/02	07:15:03	78.747
07/24/02	07:16:03	79.373
07/24/02	07:17:03	79.998
07/24/02	07:18:03	78.974
07/24/02	07:19:03	78.434
07/24/02	07:20:03	78.918
07/24/02	07:21:03	79.060
07/24/02	07:22:03	78.292
07/24/02	07:23:03	78.718
07/24/02	07:24:03	79.486
07/24/02	07:25:03	79.003
07/24/02	07:26:03	78.320
07/24/02	07:27:03	78.974
07/24/02	07:28:03	78.434
07/24/02	07:29:03	79.174
07/24/02	07:30:03	78.718
07/24/02	07:31:03	78.832
07/24/02	07:32:03	79.458
07/24/02	07:33:03	79.088
07/24/02	07:34:03	78.775
07/24/02	07:35:03	78.690
07/24/02	07:36:03	79.060
07/24/02	07:37:03	79.060
07/24/02	07:38:03	79.572
07/24/02	07:39:03	79.003
07/24/02	07:40:03	79.088
07/24/02	07:41:03	79.230
07/24/02	07:42:03	78.974
07/24/02	07:43:03	79.117
07/24/02	07:44:03	79.429
07/24/02	07:45:03	78.633
07/24/02	07:46:03	80.112
07/24/02	07:47:03	79.742
07/24/02	07:48:03	79.657
07/24/02	07:49:03	78.974
07/24/02	07:50:03	78.747
07/24/02	07:51:03	79.458
07/24/02	07:52:03	79.202
07/24/02	07:53:03	79.003
07/24/02	07:54:03	78.946
07/24/02	07:55:03	79.117
07/24/02	07:56:03	78.861
07/24/02	07:57:03	79.629
07/24/02	07:58:03	79.174
07/24/02	07:59:03	79.202
07/24/02	08:00:03	79.031
07/24/02	08:01:03	78.918
07/24/02	08:02:03	79.572
07/24/02	08:03:03	79.145
07/24/02	08:04:03	79.316
07/24/02	08:05:03	79.230
07/24/02	08:06:03	78.775
07/24/02	08:07:03	79.060
07/24/02	08:08:03	78.463
07/24/02	08:09:03	79.145
07/24/02	08:10:03	79.401
07/24/02	08:11:03	79.316
07/24/02	08:12:03	78.775
07/24/02	08:13:03	79.145
07/24/02	08:14:03	79.117
07/24/02	08:15:03	79.714
07/24/02	08:16:03	78.349

CRADDOCK AND RANCH ROAD 12 - NO. 7157 cont.

Date	Time	Pres (PSI)
07/24/02	08:17:03	79.913
07/24/02	08:18:03	79.600
07/24/02	08:19:03	79.344
07/24/02	08:20:03	78.434
07/24/02	08:21:03	78.775
07/24/02	08:22:03	78.775
07/24/02	08:23:03	79.600
07/24/02	08:24:03	79.458
07/24/02	08:25:03	79.259
07/24/02	08:26:03	79.003
07/24/02	08:27:03	79.401
07/24/02	08:28:03	79.145
07/24/02	08:29:03	78.633
07/24/02	08:30:03	79.515
07/24/02	08:31:03	79.486
07/24/02	08:32:03	89.070
07/24/02	08:33:03	83.269
07/24/02	08:34:03	84.463
07/24/02	08:35:03	84.065
07/24/02	08:36:03	84.292
07/24/02	08:37:03	84.321
07/24/02	08:38:03	84.264
07/24/02	08:39:03	84.008
07/24/02	08:40:03	84.150
07/24/02	08:41:03	83.667
07/24/02	08:42:03	84.321
07/24/02	08:43:03	84.548
07/24/02	08:44:03	83.525
07/24/02	08:45:03	84.236
07/24/02	08:46:03	84.122
07/24/02	08:47:03	84.492
07/24/02	08:48:03	84.321
07/24/02	08:49:03	83.752
07/24/02	08:50:03	83.923
07/24/02	08:51:03	84.065
07/24/02	08:52:03	83.951
07/24/02	08:53:03	83.098
07/24/02	08:54:03	83.837
07/24/02	08:55:03	83.553
07/24/02	08:56:03	83.894
07/24/02	08:57:03	84.179
07/24/02	08:58:03	83.553
07/24/02	08:59:03	84.093
07/24/02	09:00:03	83.297
07/24/02	09:01:03	83.411
07/24/02	09:02:03	83.297
07/24/02	09:03:03	83.582
07/24/02	09:04:03	83.582
07/24/02	09:05:03	83.809
07/24/02	09:06:03	84.207
07/24/02	09:07:03	83.894
07/24/02	09:08:03	83.866
07/24/02	09:09:03	83.980
07/24/02	09:10:03	84.577
07/24/02	09:11:03	84.662
07/24/02	09:12:03	83.837
07/24/02	09:13:03	84.349
07/24/02	09:14:03	84.321
07/24/02	09:15:03	83.894
07/24/02	09:16:03	84.264
07/24/02	09:17:03	84.122
07/24/02	09:18:03	83.297
07/24/02	09:19:03	84.321
07/24/02	09:20:03	83.610
07/24/02	09:21:03	84.150
07/24/02	09:22:03	84.122
07/24/02	09:23:03	83.894
07/24/02	09:24:03	83.525
07/24/02	09:25:03	83.837
07/24/02	09:26:03	83.809
07/24/02	09:27:03	84.093
07/24/02	09:28:03	83.923
07/24/02	09:29:03	83.951
07/24/02	09:30:03	83.923
07/24/02	09:31:03	84.122
07/24/02	09:32:03	84.349
07/24/02	09:33:03	83.098
07/24/02	09:34:03	83.781
07/24/02	09:35:03	84.292
07/24/02	09:36:03	83.980
07/24/02	09:37:03	83.894
07/24/02	09:38:03	83.866
07/24/02	09:39:03	83.411
07/24/02	09:40:03	83.781
07/24/02	09:41:03	84.406
07/24/02	09:42:03	83.894
07/24/02	09:43:03	84.179
07/24/02	09:44:03	84.093
07/24/02	09:45:03	84.065
07/24/02	09:46:03	84.236
07/24/02	09:47:03	84.349
07/24/02	09:48:03	84.065
07/24/02	09:49:03	84.748
07/24/02	09:50:03	83.183
07/24/02	09:51:03	84.321
07/24/02	09:52:03	84.065
07/24/02	09:53:03	84.008
07/24/02	09:54:03	84.378
07/24/02	09:55:03	84.008
07/24/02	09:56:03	84.719
07/24/02	09:57:03	85.174
07/24/02	09:58:03	84.548
07/24/02	09:59:03	84.719
07/24/02	10:00:03	84.207
07/24/02	10:01:03	84.975
07/24/02	10:02:03	85.146
07/24/02	10:03:03	84.406
07/24/02	10:04:03	84.804
07/24/02	10:05:03	84.890
07/24/02	10:06:03	84.691
07/24/02	10:07:03	84.292
07/24/02	10:08:03	84.634
07/24/02	10:09:03	85.402
07/24/02	10:10:03	84.691
07/24/02	10:11:03	84.804
07/24/02	10:12:03	85.970
07/24/02	10:13:03	84.321
07/24/02	10:14:03	85.032
07/24/02	10:15:03	84.691
07/24/02	10:16:03	84.918
07/24/02	10:17:03	85.032
07/24/02	10:18:03	85.174
07/24/02	10:19:03	84.577
07/24/02	10:20:03	84.577
07/24/02	10:21:03	84.292
07/24/02	10:22:03	84.861
07/24/02	10:23:03	84.634
07/24/02	10:24:03	84.691
07/24/02	10:25:03	84.691
07/24/02	10:26:03	84.548
07/24/02	10:27:03	84.634
07/24/02	10:28:03	84.719
07/24/02	10:29:03	84.776
07/24/02	10:30:03	61.200
07/24/02	10:31:03	84.662
07/24/02	10:32:03	80.851
07/24/02	10:33:03	77.865
07/24/02	10:34:03	80.197
07/24/02	10:35:03	79.060
07/24/02	10:36:03	80.453
07/24/02	10:37:03	78.576
07/24/02	10:38:03	79.742
07/24/02	10:39:03	79.031
07/24/02	10:40:03	78.946
07/24/02	10:41:03	78.804
07/24/02	10:42:03	78.548
07/24/02	10:43:03	78.861
07/24/02	10:44:03	79.515
07/24/02	10:45:03	79.572
07/24/02	10:46:03	79.486
07/24/02	10:47:03	79.117
07/24/02	10:48:03	79.230
07/24/02	10:49:03	80.311
07/24/02	10:50:03	79.316
07/24/02	10:51:03	79.202
07/24/02	10:52:03	78.832
07/24/02	10:53:03	79.230
07/24/02	10:54:03	78.548
07/24/02	10:55:03	79.088
07/24/02	10:56:03	78.605
07/24/02	10:57:03	79.344
07/24/02	10:58:03	78.263
07/24/02	10:59:03	79.970
07/24/02	11:00:03	86.340
07/24/02	11:01:03	74.111
07/24/02	11:02:03	78.121
07/24/02	11:03:03	79.657
07/24/02	11:04:03	78.377
07/24/02	11:05:03	78.775
07/24/02	11:06:03	77.922
07/24/02	11:07:03	79.060
07/24/02	11:08:03	77.211
07/24/02	11:09:03	78.946
07/24/02	11:10:03	78.320
07/24/02	11:11:03	77.865
07/24/02	11:12:03	79.373
07/24/02	11:13:03	78.832
07/24/02	11:14:03	78.150
07/24/02	11:15:03	77.467
07/24/02	11:16:03	78.263
07/24/02	11:17:03	78.690
07/24/02	11:18:03	77.439
07/24/02	11:19:03	78.207
07/24/02	11:20:03	78.519
07/24/02	11:21:03	78.576
07/24/02	11:22:03	79.344
07/24/02	11:23:03	79.088
07/24/02	11:24:03	78.178
07/24/02	11:25:03	78.918
07/24/02	11:26:03	77.553
07/24/02	11:27:03	78.292
07/24/02	11:28:03	77.865
07/24/02	11:29:03	78.064
07/24/02	11:30:03	78.377
07/24/02	11:31:03	78.662
07/24/02	11:32:03	77.410
07/24/02	11:33:03	78.349
07/24/02	11:34:03	78.064
07/24/02	11:35:03	78.292
07/24/02	11:36:03	78.349
07/24/02	11:37:03	78.804
07/24/02	11:38:03	78.377
07/24/02	11:39:03	78.434
07/24/02	11:40:03	78.576
07/24/02	11:41:03	78.263
07/24/02	11:42:03	78.263
07/24/02	11:43:03	77.325
07/24/02	11:44:03	79.060
07/24/02	11:45:03	78.633
07/24/02	11:46:03	78.406
07/24/02	11:47:03	78.946
07/24/02	11:48:03	78.406
07/24/02	11:49:03	77.979
07/24/02	11:50:03	78.861
07/24/02	11:51:03	78.434
07/24/02	11:52:03	78.263
07/24/02	11:53:03	77.951
07/24/02	11:54:03	77.922
07/24/02	11:55:03	78.235
07/24/02	11:56:03	77.410
07/24/02	11:57:03	78.434
07/24/02	11:58:03	78.804
07/24/02	11:59:03	78.235
07/24/02	12:00:03	78.548
07/24/02	12:01:03	78.406
07/24/02	12:02:03	77.240
07/24/02	12:03:03	77.638
07/24/02	12:04:03	78.690
07/24/02	12:05:03	77.012
07/24/02	12:06:03	77.012
07/24/02	12:07:03	78.747
07/24/02	12:08:03	77.979
07/24/02	12:09:03	77.382
07/24/02	12:10:03	78.377
07/24/02	12:11:03	77.951
07/24/02	12:12:03	77.467
07/24/02	12:13:03	77.865
07/24/02	12:14:03	78.235
07/24/02	12:15:03	77.609
07/24/02	12:16:03	78.036
07/24/02	12:17:03	77.268
07/24/02	12:18:03	77.382
07/24/02	12:19:03	77.211
07/24/02	12:20:03	78.064
07/24/02	12:21:03	77.325
07/24/02	12:22:03	77.865
07/24/02	12:23:03	77.240
07/24/02	12:24:03	78.349
07/24/02	12:25:03	77.524
07/24/02	12:26:03	77.553
07/24/02	12:27:03	78.064
07/24/02	12:28:03	77.353
07/24/02	12:29:03	77.780
07/24/02	12:30:03	78.519
07/24/02	12:31:03	77.951
07/24/02	12:32:03	77.524
07/24/02	12:33:03	77.752
07/24/02	12:34:03	78.036
07/24/02	12:35:03	77.581
07/24/02	12:36:03	77.951
07/24/02	12:37:03	77.780
07/24/02	12:38:03	77.240
07/24/02	12:39:03	77.865
07/24/02	12:40:03	76.955

CRADDOCK AND RANCH ROAD 12 - NO. 7157 cont.

Date	Time	Pres (PSI)
07/24/02	12:41:03	78.292
07/24/02	12:42:03	77.041
07/24/02	12:43:03	76.785
07/24/02	12:44:03	77.012
07/24/02	12:45:03	77.723
07/24/02	12:46:03	77.496
07/24/02	12:47:03	77.240
07/24/02	12:48:03	76.955
07/24/02	12:49:03	76.813
07/24/02	12:50:03	76.870
07/24/02	12:51:03	77.666
07/24/02	12:52:03	77.467
07/24/02	12:53:03	76.586
07/24/02	12:54:03	77.865
07/24/02	12:55:03	76.842
07/24/02	12:56:03	77.638
07/24/02	12:57:03	77.126
07/24/02	12:58:03	77.126
07/24/02	12:59:03	77.325
07/24/02	13:00:03	76.614
07/24/02	13:01:03	78.121
07/24/02	13:02:03	76.842
07/24/02	13:03:03	76.955
07/24/02	13:04:03	77.553
07/24/02	13:05:03	76.586
07/24/02	13:06:03	77.951
07/24/02	13:07:03	77.041
07/24/02	13:08:03	77.325
07/24/02	13:09:03	77.467
07/24/02	13:10:03	77.069
07/24/02	13:11:03	76.443
07/24/02	13:12:03	77.382
07/24/02	13:13:03	76.785
07/24/02	13:14:03	77.126
07/24/02	13:15:03	76.927
07/24/02	13:16:03	77.012
07/24/02	13:17:03	76.984
07/24/02	13:18:03	77.353
07/24/02	13:19:03	75.846
07/24/02	13:20:03	77.069
07/24/02	13:21:03	76.671
07/24/02	13:22:03	76.472
07/24/02	13:23:03	77.979
07/24/02	13:24:03	76.614
07/24/02	13:25:03	77.183
07/24/02	13:26:03	76.699
07/24/02	13:27:03	76.870
07/24/02	13:28:03	77.154
07/24/02	13:29:03	77.012
07/24/02	13:30:03	75.931
07/24/02	13:31:03	76.187
07/24/02	13:32:03	77.211
07/24/02	13:33:03	75.221
07/24/02	13:34:03	77.353
07/24/02	13:35:03	76.586
07/24/02	13:36:03	76.955
07/24/02	13:37:03	77.211
07/24/02	13:38:03	75.789
07/24/02	13:39:03	76.842
07/24/02	13:40:03	76.870
07/24/02	13:41:03	76.728
07/24/02	13:42:03	76.699
07/24/02	13:43:03	77.638
07/24/02	13:44:03	76.074
07/24/02	13:45:03	77.012
07/24/02	13:46:03	76.415
07/24/02	13:47:03	76.216
07/24/02	13:48:03	77.325
07/24/02	13:49:03	76.728
07/24/02	13:50:03	76.870
07/24/02	13:51:03	76.671
07/24/02	13:52:03	77.382
07/24/02	13:53:03	76.443
07/24/02	13:54:03	77.012
07/24/02	13:55:03	76.074
07/24/02	13:56:03	76.842
07/24/02	13:57:03	76.756
07/24/02	13:58:03	75.988
07/24/02	13:59:03	76.387
07/24/02	14:00:03	77.154
07/24/02	14:01:03	76.842
07/24/02	14:02:03	76.842
07/24/02	14:03:03	76.074
07/24/02	14:04:03	76.785
07/24/02	14:05:03	77.041
07/24/02	14:06:03	76.074
07/24/02	14:07:03	77.097
07/24/02	14:08:03	76.642
07/24/02	14:09:03	76.756
07/24/02	14:10:03	76.557
07/24/02	14:11:03	76.699
07/24/02	14:12:03	76.472
07/24/02	14:13:03	76.870
07/24/02	14:14:03	75.789
07/24/02	14:15:03	76.557
07/24/02	14:16:03	76.955
07/24/02	14:17:03	76.273
07/24/02	14:18:03	76.756
07/24/02	14:19:03	75.533
07/24/02	14:20:03	76.187
07/24/02	14:21:03	77.581
07/24/02	14:22:03	78.662
07/24/02	14:23:03	77.154
07/24/02	14:24:03	78.718
07/24/02	14:25:03	77.410
07/24/02	14:26:03	76.671
07/24/02	14:27:03	77.524
07/24/02	14:28:03	77.723
07/24/02	14:29:03	77.638
07/24/02	14:30:03	77.666
07/24/02	14:31:03	77.097
07/24/02	14:32:03	78.434
07/24/02	14:33:03	77.154
07/24/02	14:34:03	77.524
07/24/02	14:35:03	77.240
07/24/02	14:36:03	77.894
07/24/02	14:37:03	77.837
07/24/02	14:38:03	77.524
07/24/02	14:39:03	77.410
07/24/02	14:40:03	77.894
07/24/02	14:41:03	77.211
07/24/02	14:42:03	77.865
07/24/02	14:43:03	0.540
07/24/02	14:44:03	0.569
07/24/02	14:45:03	0.569
07/24/02	14:46:03	0.626
07/24/02	14:47:03	0.540
07/24/02	14:48:03	0.540
07/24/02	14:49:03	0.483
07/24/02	14:50:03	0.427
07/24/02	14:51:03	0.398
07/24/02	14:52:03	0.313
07/24/02	14:53:03	0.341
07/24/02	14:54:03	0.455
07/24/02	14:55:03	0.313
07/24/02	14:56:03	0.427
07/24/02	14:57:03	0.427
07/24/02	14:58:03	0.455
07/24/02	14:59:03	0.341
07/24/02	15:00:03	0.284
07/24/02	15:01:03	0.313
07/24/02	15:02:03	0.284
07/24/02	15:03:03	0.398
07/24/02	15:04:03	0.256
07/24/02	15:05:03	0.398
07/24/02	15:06:03	0.341
07/24/02	15:07:03	0.284
07/24/02	15:08:03	0.313
07/24/02	15:09:03	0.313
07/24/02	15:10:03	0.313
07/24/02	15:11:03	0.398
07/24/02	15:12:03	0.398
07/24/02	15:13:03	0.427
07/24/02	15:14:03	0.341
07/24/02	15:15:03	0.398
07/24/02	15:16:03	0.341
07/24/02	15:17:03	0.427
07/24/02	15:18:03	0.341
07/24/02	15:19:03	0.256
07/24/02	15:20:03	0.341
07/24/02	15:21:03	0.313
07/24/02	15:22:03	0.284
07/24/02	15:23:03	0.398
07/24/02	15:24:03	0.455
07/24/02	15:25:03	0.455
07/24/02	15:26:03	0.398
07/24/02	15:27:03	0.427
07/24/02	15:28:03	0.427
07/24/02	15:29:03	0.341
07/24/02	15:30:03	0.398
07/24/02	15:31:03	0.341
07/24/02	15:32:03	0.427
07/24/02	15:33:03	0.341
07/24/02	15:34:03	0.284
07/24/02	15:35:03	0.341
07/24/02	15:36:03	0.341
07/24/02	15:37:03	0.341
07/24/02	15:38:03	0.398
07/24/02	15:39:03	0.313
07/24/02	15:40:03	0.341
07/24/02	15:41:03	0.313
07/24/02	15:42:03	0.284
07/24/02	15:43:03	0.313
07/24/02	15:44:03	0.313
07/24/02	15:45:03	0.341
07/24/02	15:46:03	0.313
07/24/02	15:47:03	0.341
07/24/02	15:48:03	0.398
07/24/02	15:49:03	0.398
07/24/02	15:50:03	0.398
07/24/02	15:51:03	0.398
07/24/02	15:52:03	0.398
07/24/02	15:53:03	0.313
07/24/02	15:54:03	0.398
07/24/02	15:55:03	0.455
07/24/02	15:56:03	0.455
07/24/02	15:57:03	0.427
07/24/02	15:58:03	0.427
07/24/02	15:59:03	0.398
07/24/02	16:00:03	0.398
07/24/02	16:01:03	0.398
07/24/02	16:02:03	0.427
07/24/02	16:03:03	0.398
07/24/02	16:04:03	0.427
07/24/02	16:05:03	0.398
07/24/02	16:06:03	0.427
07/24/02	16:07:03	0.398
07/24/02	16:08:03	0.427
07/24/02	16:09:03	0.398
07/24/02	16:10:03	0.313
07/24/02	16:11:03	0.398
07/24/02	16:12:03	0.427
07/24/02	16:13:03	0.341
07/24/02	16:14:03	0.341
07/24/02	16:15:03	0.313
07/24/02	16:16:03	0.341
07/24/02	16:17:03	0.341
07/24/02	16:18:03	0.427
07/24/02	16:19:03	0.284
07/24/02	16:20:03	0.313
07/24/02	16:21:03	0.284
07/24/02	16:22:03	0.256
07/24/02	16:23:03	0.228

DIXON AND BELVIN - NO. 7550

Date	Time	Pres (PSI)	Date	Time	Pres (PSI)	Date	Time	Pres (PSI)	Date	Time	Pres (PSI)
07/22/02	07:53:39	-0.882	07/22/02	08:59:39	-0.995	07/22/02	10:05:39	73.742	07/22/02	11:11:39	75.391
07/22/02	07:54:39	-0.882	07/22/02	09:00:39	-0.995	07/22/02	10:06:39	73.998	07/22/02	11:12:39	73.088
07/22/02	07:55:39	-0.938	07/22/02	09:01:39	-0.995	07/22/02	10:07:39	74.652	07/22/02	11:13:39	73.884
07/22/02	07:56:39	-0.882	07/22/02	09:02:39	-1.052	07/22/02	10:08:39	75.107	07/22/02	11:14:39	72.945
07/22/02	07:57:39	-0.882	07/22/02	09:03:39	-0.995	07/22/02	10:09:39	74.652	07/22/02	11:15:39	73.400
07/22/02	07:58:39	-0.882	07/22/02	09:04:39	-0.995	07/22/02	10:10:39	74.168	07/22/02	11:16:39	74.481
07/22/02	07:59:39	-0.882	07/22/02	09:05:39	-0.995	07/22/02	10:11:39	74.055	07/22/02	11:17:39	73.571
07/22/02	08:00:39	-0.882	07/22/02	09:06:39	-1.052	07/22/02	10:12:39	71.751	07/22/02	11:18:39	72.832
07/22/02	08:01:39	-0.882	07/22/02	09:07:39	-0.995	07/22/02	10:13:39	73.827	07/22/02	11:19:39	75.277
07/22/02	08:02:39	-0.938	07/22/02	09:08:39	-0.995	07/22/02	10:14:39	73.457	07/22/02	11:20:39	73.144
07/22/02	08:03:39	-0.882	07/22/02	09:09:39	-1.052	07/22/02	10:15:39	73.258	07/22/02	11:21:39	73.400
07/22/02	08:04:39	-0.882	07/22/02	09:10:39	-0.995	07/22/02	10:16:39	74.310	07/22/02	11:22:39	73.571
07/22/02	08:05:39	-0.882	07/22/02	09:11:39	-1.052	07/22/02	10:17:39	74.310	07/22/02	11:23:39	73.457
07/22/02	08:06:39	-0.882	07/22/02	09:12:39	-0.995	07/22/02	10:18:39	74.965	07/22/02	11:24:39	75.818
07/22/02	08:07:39	-0.882	07/22/02	09:13:39	-1.052	07/22/02	10:19:39	74.794	07/22/02	11:25:39	74.254
07/22/02	08:08:39	-0.938	07/22/02	09:14:39	-0.938	07/22/02	10:20:39	73.514	07/22/02	11:26:39	76.358
07/22/02	08:09:39	-0.938	07/22/02	09:15:39	-0.938	07/22/02	10:21:39	74.367	07/22/02	11:27:39	75.761
07/22/02	08:10:39	-0.882	07/22/02	09:16:39	-1.052	07/22/02	10:22:39	74.538	07/22/02	11:28:39	75.221
07/22/02	08:11:39	-0.882	07/22/02	09:17:39	-0.995	07/22/02	10:23:39	75.334	07/22/02	11:29:39	73.457
07/22/02	08:12:39	-0.882	07/22/02	09:18:39	-1.052	07/22/02	10:24:39	74.225	07/22/02	11:30:39	75.647
07/22/02	08:13:39	-0.938	07/22/02	09:19:39	-0.995	07/22/02	10:25:39	75.107	07/22/02	11:31:39	74.595
07/22/02	08:14:39	-0.938	07/22/02	09:20:39	-0.995	07/22/02	10:26:39	75.021	07/22/02	11:32:39	74.310
07/22/02	08:15:39	-0.882	07/22/02	09:21:39	-0.995	07/22/02	10:27:39	73.628	07/22/02	11:33:39	73.685
07/22/02	08:16:39	-0.882	07/22/02	09:22:39	-0.995	07/22/02	10:28:39	76.728	07/22/02	11:34:39	76.443
07/22/02	08:17:39	-0.938	07/22/02	09:23:39	-0.995	07/22/02	10:29:39	72.775	07/22/02	11:35:39	76.131
07/22/02	08:18:39	-0.882	07/22/02	09:24:39	-1.052	07/22/02	10:30:39	73.144	07/22/02	11:36:39	76.301
07/22/02	08:19:39	-0.882	07/22/02	09:25:39	-1.052	07/22/02	10:31:39	74.595	07/22/02	11:37:39	75.164
07/22/02	08:20:39	-0.882	07/22/02	09:26:39	-1.052	07/22/02	10:32:39	73.088	07/22/02	11:38:39	74.851
07/22/02	08:21:39	-0.882	07/22/02	09:27:39	-1.052	07/22/02	10:33:39	74.310	07/22/02	11:39:39	76.415
07/22/02	08:22:39	-0.882	07/22/02	09:28:39	-1.052	07/22/02	10:34:39	73.258	07/22/02	11:40:39	77.353
07/22/02	08:23:39	-0.882	07/22/02	09:29:39	-1.052	07/22/02	10:35:39	75.021	07/22/02	11:41:39	76.301
07/22/02	08:24:39	-0.882	07/22/02	09:30:39	-1.052	07/22/02	10:36:39	72.832	07/22/02	11:42:39	75.505
07/22/02	08:25:39	-0.882	07/22/02	09:31:39	-1.052	07/22/02	10:37:39	74.965	07/22/02	11:43:39	75.562
07/22/02	08:26:39	-0.938	07/22/02	09:32:39	-1.052	07/22/02	10:38:39	75.107	07/22/02	11:44:39	75.988
07/22/02	08:27:39	-0.882	07/22/02	09:33:39	-1.052	07/22/02	10:39:39	73.315	07/22/02	11:45:39	76.785
07/22/02	08:28:39	-0.938	07/22/02	09:34:39	-0.995	07/22/02	10:40:39	75.221	07/22/02	11:46:39	76.728
07/22/02	08:29:39	-0.853	07/22/02	09:35:39	-0.995	07/22/02	10:41:39	73.144	07/22/02	11:47:39	78.434
07/22/02	08:30:39	-0.882	07/22/02	09:36:39	-0.995	07/22/02	10:42:39	74.481	07/22/02	11:48:39	76.358
07/22/02	08:31:39	-0.938	07/22/02	09:37:39	-1.052	07/22/02	10:43:39	73.514	07/22/02	11:49:39	75.704
07/22/02	08:32:39	-0.938	07/22/02	09:38:39	-1.052	07/22/02	10:44:39	72.462	07/22/02	11:50:39	76.785
07/22/02	08:33:39	-0.882	07/22/02	09:39:39	-1.052	07/22/02	10:45:39	74.310	07/22/02	11:51:39	77.154
07/22/02	08:34:39	-0.882	07/22/02	09:40:39	-1.052	07/22/02	10:46:39	73.884	07/22/02	11:52:39	75.448
07/22/02	08:35:39	-0.882	07/22/02	09:41:39	-1.052	07/22/02	10:47:39	73.884	07/22/02	11:53:39	77.211
07/22/02	08:36:39	-0.882	07/22/02	09:42:39	-1.052	07/22/02	10:48:39	75.391	07/22/02	11:54:39	75.590
07/22/02	08:37:39	-0.938	07/22/02	09:43:39	-0.995	07/22/02	10:49:39	73.941	07/22/02	11:55:39	77.211
07/22/02	08:38:39	-0.882	07/22/02	09:44:39	-1.052	07/22/02	10:50:39	72.945	07/22/02	11:56:39	76.614
07/22/02	08:39:39	-0.938	07/22/02	09:45:39	-0.995	07/22/02	10:51:39	74.055	07/22/02	11:57:39	76.557
07/22/02	08:40:39	-0.882	07/22/02	09:46:39	-1.052	07/22/02	10:52:39	74.225	07/22/02	11:58:39	75.761
07/22/02	08:41:39	-0.938	07/22/02	09:47:39	-1.052	07/22/02	10:53:39	74.481	07/22/02	11:59:39	77.211
07/22/02	08:42:39	-0.938	07/22/02	09:48:39	-1.052	07/22/02	10:54:39	75.334	07/22/02	12:00:39	75.562
07/22/02	08:43:39	-0.938	07/22/02	09:49:39	-1.052	07/22/02	10:55:39	74.168	07/22/02	12:01:39	77.467
07/22/02	08:44:39	-0.938	07/22/02	09:50:39	-1.052	07/22/02	10:56:39	74.851	07/22/02	12:02:39	77.297
07/22/02	08:45:39	-0.938	07/22/02	09:51:39	-1.052	07/22/02	10:57:39	72.035	07/22/02	12:03:39	78.861
07/22/02	08:46:39	-0.938	07/22/02	09:52:39	-1.052	07/22/02	10:58:39	71.694	07/22/02	12:04:39	76.870
07/22/02	08:47:39	-0.995	07/22/02	09:53:39	-1.052	07/22/02	10:59:39	74.680	07/22/02	12:05:39	76.927
07/22/02	08:48:39	-0.938	07/22/02	09:54:39	-1.052	07/22/02	11:00:39	74.310	07/22/02	12:06:39	76.301
07/22/02	08:49:39	-0.995	07/22/02	09:55:39	-1.052	07/22/02	11:01:39	70.528	07/22/02	12:07:39	77.524
07/22/02	08:50:39	-0.938	07/22/02	09:56:39	-1.052	07/22/02	11:02:39	73.941	07/22/02	12:08:39	75.818
07/22/02	08:51:39	-0.938	07/22/02	09:57:39	-0.995	07/22/02	11:03:39	73.088	07/22/02	12:09:39	76.728
07/22/02	08:52:39	-0.938	07/22/02	09:58:39	-0.995	07/22/02	11:04:39	73.031	07/22/02	12:10:39	76.244
07/22/02	08:53:39	-0.995	07/22/02	09:59:39	-0.995	07/22/02	11:05:39	73.258	07/22/02	12:11:39	76.557
07/22/02	08:54:39	-0.938	07/22/02	10:00:39	-0.995	07/22/02	11:06:39	72.945	07/22/02	12:12:39	72.348
07/22/02	08:55:39	-0.995	07/22/02	10:01:39	-0.995	07/22/02	11:07:39	73.799	07/22/02	12:13:39	74.737
07/22/02	08:56:39	-0.995	07/22/02	10:02:39	-0.995	07/22/02	11:08:39	72.121	07/22/02	12:14:39	74.367
07/22/02	08:57:39	-0.995	07/22/02	10:03:39	75.078	07/22/02	11:09:39	74.538	07/22/02	12:15:39	73.941
07/22/02	08:58:39	-0.995	07/22/02	10:04:39	74.652	07/22/02	11:10:39	72.405	07/22/02	12:16:39	74.908

DIXON AND BELVIN - NO. 7550

Date	Time	Pres (PSI)
07/22/02	12:17:39	73.884
07/22/02	12:18:39	77.154
07/22/02	12:19:39	76.728
07/22/02	12:20:39	75.988
07/22/02	12:21:39	75.590
07/22/02	12:22:39	77.097
07/22/02	12:23:39	75.164
07/22/02	12:24:39	75.988
07/22/02	12:25:39	76.614
07/22/02	12:26:39	76.415
07/22/02	12:27:39	77.297
07/22/02	12:28:39	77.154
07/22/02	12:29:39	76.500
07/22/02	12:30:39	76.870
07/22/02	12:31:39	78.491
07/22/02	12:32:39	76.500
07/22/02	12:33:39	76.017
07/22/02	12:34:39	74.965
07/22/02	12:35:39	77.638
07/22/02	12:36:39	76.443
07/22/02	12:37:39	77.837
07/22/02	12:38:39	77.780
07/22/02	12:39:39	76.842
07/22/02	12:40:39	76.415
07/22/02	12:41:39	77.894
07/22/02	12:42:39	76.671
07/22/02	12:43:39	76.415
07/22/02	12:44:39	77.581
07/22/02	12:45:39	75.647
07/22/02	12:46:39	79.174
07/22/02	12:47:39	76.301
07/22/02	12:48:39	78.320
07/22/02	12:49:39	76.415
07/22/02	12:50:39	77.097
07/22/02	12:51:39	77.524
07/22/02	12:52:39	77.581
07/22/02	12:53:39	77.695
07/22/02	12:54:39	78.548
07/22/02	12:55:39	79.287
07/22/02	12:56:39	75.391
07/22/02	12:57:39	73.998
07/22/02	12:58:39	75.021
07/22/02	12:59:39	73.998
07/22/02	13:00:39	73.031
07/22/02	13:01:39	74.794
07/22/02	13:02:39	76.984
07/22/02	13:03:39	77.951
07/22/02	13:04:39	76.927
07/22/02	13:05:39	78.263
07/22/02	13:06:39	78.918
07/22/02	13:07:39	77.723
07/22/02	13:08:39	77.837
07/22/02	13:09:39	76.785
07/22/02	13:10:39	76.301
07/22/02	13:11:39	74.055
07/22/02	13:12:39	75.875
07/22/02	13:13:39	74.225
07/22/02	13:14:39	73.941
07/22/02	13:15:39	75.164
07/22/02	13:16:39	73.998
07/22/02	13:17:39	74.055
07/22/02	13:18:39	78.008
07/22/02	13:19:39	76.017
07/22/02	13:20:39	76.671
07/22/02	13:21:39	76.671
07/22/02	13:22:39	76.017
07/22/02	13:23:39	78.178
07/22/02	13:24:39	77.211
07/22/02	13:25:39	78.320
07/22/02	13:26:39	76.443
07/22/02	13:27:39	75.391
07/22/02	13:28:39	77.154
07/22/02	13:29:39	76.358
07/22/02	13:30:39	75.562
07/22/02	13:31:39	74.965
07/22/02	13:32:39	78.263
07/22/02	13:33:39	76.301
07/22/02	13:34:39	76.358
07/22/02	13:35:39	77.695
07/22/02	13:36:39	77.467
07/22/02	13:37:39	77.353
07/22/02	13:38:39	76.927
07/22/02	13:39:39	75.562
07/22/02	13:40:39	73.799
07/22/02	13:41:39	74.481
07/22/02	13:42:39	74.794
07/22/02	13:43:39	73.742
07/22/02	13:44:39	74.965
07/22/02	13:45:39	78.263
07/22/02	13:46:39	76.557
07/22/02	13:47:39	76.131
07/22/02	13:48:39	76.842
07/22/02	13:49:39	77.837
07/22/02	13:50:39	76.614
07/22/02	13:51:39	76.671
07/22/02	13:52:39	73.372
07/22/02	13:53:39	74.168
07/22/02	13:54:39	74.310
07/22/02	13:55:39	73.998
07/22/02	13:56:39	73.742
07/22/02	13:57:39	74.965
07/22/02	13:58:39	77.097
07/22/02	13:59:39	76.927
07/22/02	14:00:39	75.505
07/22/02	14:01:39	75.590
07/22/02	14:02:39	76.927
07/22/02	14:03:39	61.598
07/22/02	14:04:39	65.352
07/22/02	14:05:39	67.229
07/22/02	14:06:39	66.461
07/22/02	14:07:39	66.461
07/22/02	14:08:39	66.262
07/22/02	14:09:39	73.031
07/22/02	14:10:39	75.334
07/22/02	14:11:39	75.221
07/22/02	14:12:39	75.590
07/22/02	14:13:39	73.799
07/22/02	14:14:39	75.334
07/22/02	14:15:39	76.500
07/22/02	14:16:39	76.785
07/22/02	14:17:39	77.780
07/22/02	14:18:39	75.704
07/22/02	14:19:39	75.875
07/22/02	14:20:39	75.931
07/22/02	14:21:39	76.131
07/22/02	14:22:39	76.074
07/22/02	14:23:39	75.988
07/22/02	14:24:39	74.481
07/22/02	14:25:39	74.481
07/22/02	14:26:39	76.557
07/22/02	14:27:39	76.074
07/22/02	14:28:39	75.448
07/22/02	14:29:39	75.448
07/22/02	14:30:39	77.297
07/22/02	14:31:39	71.808
07/22/02	14:32:39	71.637
07/22/02	14:33:39	73.998
07/22/02	14:34:39	73.571
07/22/02	14:35:39	73.685
07/22/02	14:36:39	73.088
07/22/02	14:37:39	72.832
07/22/02	14:38:39	74.851
07/22/02	14:39:39	73.144
07/22/02	14:40:39	72.462
07/22/02	14:41:39	72.945
07/22/02	14:42:39	72.121
07/22/02	14:43:39	72.064
07/22/02	14:44:39	72.462
07/22/02	14:45:39	72.718
07/22/02	14:46:39	73.031
07/22/02	14:47:39	72.718
07/22/02	14:48:39	73.571
07/22/02	14:49:39	73.827
07/22/02	14:50:39	73.031
07/22/02	14:51:39	72.462
07/22/02	14:52:39	72.490
07/22/02	14:53:39	73.685
07/22/02	14:54:39	73.571
07/22/02	14:55:39	73.088
07/22/02	14:56:39	73.742
07/22/02	14:57:39	73.457
07/22/02	14:58:39	71.865
07/22/02	14:59:39	73.088
07/22/02	15:00:39	73.685
07/22/02	15:01:39	69.305
07/22/02	15:02:39	71.552
07/22/02	15:03:39	77.524
07/22/02	15:04:39	72.945
07/22/02	15:05:39	71.979
07/22/02	15:06:39	73.400
07/22/02	15:07:39	74.851
07/22/02	15:08:39	75.590
07/22/02	15:09:39	75.078
07/22/02	15:10:39	74.055
07/22/02	15:11:39	75.078
07/22/02	15:12:39	74.367
07/22/02	15:13:39	74.310
07/22/02	15:14:39	75.704
07/22/02	15:15:39	73.031
07/22/02	15:16:39	72.547
07/22/02	15:17:39	74.652
07/22/02	15:18:39	73.827
07/22/02	15:19:39	75.107
07/22/02	15:20:39	74.908
07/22/02	15:21:39	74.111
07/22/02	15:22:39	75.590
07/22/02	15:23:39	74.111
07/22/02	15:24:39	75.647
07/22/02	15:25:39	74.851
07/22/02	15:26:39	74.595
07/22/02	15:27:39	72.604
07/22/02	15:28:39	74.595
07/22/02	15:29:39	72.775
07/22/02	15:30:39	75.164
07/22/02	15:31:39	73.742
07/22/02	15:32:39	75.590
07/22/02	15:33:39	72.832
07/22/02	15:34:39	77.097
07/22/02	15:35:39	74.367
07/22/02	15:36:39	75.391
07/22/02	15:37:39	76.614
07/22/02	15:38:39	76.415
07/22/02	15:39:39	75.818
07/22/02	15:40:39	76.870
07/22/02	15:41:39	75.164
07/22/02	15:42:39	75.647
07/22/02	15:43:39	76.187
07/22/02	15:44:39	79.230
07/22/02	15:45:39	78.491
07/22/02	15:46:39	78.491
07/22/02	15:47:39	78.207
07/22/02	15:48:39	78.918
07/22/02	15:49:39	79.117
07/22/02	15:50:39	80.197
07/22/02	15:51:39	77.581
07/22/02	15:52:39	77.837
07/22/02	15:53:39	77.837
07/22/02	15:54:39	77.638
07/22/02	15:55:39	78.121
07/22/02	15:56:39	77.097
07/22/02	15:57:39	77.268
07/22/02	15:58:39	77.581
07/22/02	15:59:39	77.097
07/22/02	16:00:39	76.443
07/22/02	16:01:39	75.590
07/22/02	16:02:39	77.154
07/22/02	16:03:39	76.728
07/22/02	16:04:39	77.268
07/22/02	16:05:39	73.088
07/22/02	16:06:39	77.268
07/22/02	16:07:39	76.500
07/22/02	16:08:39	77.894
07/22/02	16:09:39	76.187
07/22/02	16:10:39	77.268
07/22/02	16:11:39	77.780
07/22/02	16:12:39	76.842
07/22/02	16:13:39	75.761
07/22/02	16:14:39	76.842
07/22/02	16:15:39	75.391
07/22/02	16:16:39	75.277
07/22/02	16:17:39	76.131
07/22/02	16:18:39	76.500
07/22/02	16:19:39	76.415
07/22/02	16:20:39	78.008
07/22/02	16:21:39	76.927
07/22/02	16:22:39	75.334
07/22/02	16:23:39	76.443
07/22/02	16:24:39	76.870
07/22/02	16:25:39	76.671
07/22/02	16:26:39	76.557
07/22/02	16:27:39	76.984
07/22/02	16:28:39	77.097
07/22/02	16:29:39	75.818
07/22/02	16:30:39	78.377
07/22/02	16:31:39	75.448
07/22/02	16:32:39	75.931
07/22/02	16:33:39	76.131
07/22/02	16:34:39	78.690
07/22/02	16:35:39	76.984
07/22/02	16:36:39	75.107
07/22/02	16:37:39	77.353
07/22/02	16:38:39	77.410
07/22/02	16:39:39	75.875
07/22/02	16:40:39	77.154

DIXON AND BELVIN - NO. 7550 cont.

Date	Time	Pres (PSI)	Date	Time	Pres (PSI)	Date	Time	Pres (PSI)	Date	Time	Pres (PSI)
07/22/02	16:41:39	78.804	07/22/02	17:47:39	76.187	07/22/02	18:53:39	72.889	07/22/02	19:59:39	75.562
07/22/02	16:42:39	78.178	07/22/02	17:48:39	76.017	07/22/02	18:54:39	73.742	07/22/02	20:00:39	75.021
07/22/02	16:43:39	78.434	07/22/02	17:49:39	76.785	07/22/02	18:55:39	73.400	07/22/02	20:01:39	75.875
07/22/02	16:44:39	78.377	07/22/02	17:50:39	76.500	07/22/02	18:56:39	74.595	07/22/02	20:02:39	74.595
07/22/02	16:45:39	77.894	07/22/02	17:51:39	77.467	07/22/02	18:57:39	73.315	07/22/02	20:03:39	73.742
07/22/02	16:46:39	76.074	07/22/02	17:52:39	75.931	07/22/02	18:58:39	72.178	07/22/02	20:04:39	76.131
07/22/02	16:47:39	77.780	07/22/02	17:53:39	75.818	07/22/02	18:59:39	72.974	07/22/02	20:05:39	74.481
07/22/02	16:48:39	76.074	07/22/02	17:54:39	75.818	07/22/02	19:00:39	72.490	07/22/02	20:06:39	76.557
07/22/02	16:49:39	76.984	07/22/02	17:55:39	75.761	07/22/02	19:01:39	72.064	07/22/02	20:07:39	73.941
07/22/02	16:50:39	77.837	07/22/02	17:56:39	75.391	07/22/02	19:02:39	72.234	07/22/02	20:08:39	73.941
07/22/02	16:51:39	78.633	07/22/02	17:57:39	74.055	07/22/02	19:03:39	73.571	07/22/02	20:09:39	76.301
07/22/02	16:52:39	76.074	07/22/02	17:58:39	75.391	07/22/02	19:04:39	72.547	07/22/02	20:10:39	72.661
07/22/02	16:53:39	75.221	07/22/02	17:59:39	74.652	07/22/02	19:05:39	73.088	07/22/02	20:11:39	75.334
07/22/02	16:54:39	77.410	07/22/02	18:00:39	75.818	07/22/02	19:06:39	72.405	07/22/02	20:12:39	74.111
07/22/02	16:55:39	76.301	07/22/02	18:01:39	74.965	07/22/02	19:07:39	74.111	07/22/02	20:13:39	74.481
07/22/02	16:56:39	74.794	07/22/02	18:02:39	74.652	07/22/02	19:08:39	72.291	07/22/02	20:14:39	75.021
07/22/02	16:57:39	77.837	07/22/02	18:03:39	73.315	07/22/02	19:09:39	72.889	07/22/02	20:15:39	74.794
07/22/02	16:58:39	75.590	07/22/02	18:04:39	76.500	07/22/02	19:10:39	78.178	07/22/02	20:16:39	74.481
07/22/02	16:59:39	76.131	07/22/02	18:05:39	75.647	07/22/02	19:11:39	72.234	07/22/02	20:17:39	75.391
07/22/02	17:00:39	75.988	07/22/02	18:06:39	74.965	07/22/02	19:12:39	75.875	07/22/02	20:18:39	75.647
07/22/02	17:01:39	77.041	07/22/02	18:07:39	76.557	07/22/02	19:13:39	75.021	07/22/02	20:19:39	74.794
07/22/02	17:02:39	75.704	07/22/02	18:08:39	75.988	07/22/02	19:14:39	75.078	07/22/02	20:20:39	74.908
07/22/02	17:03:39	75.931	07/22/02	18:09:39	75.562	07/22/02	19:15:39	76.614	07/22/02	20:21:39	75.164
07/22/02	17:04:39	76.500	07/22/02	18:10:39	75.704	07/22/02	19:16:39	75.875	07/22/02	20:22:39	76.017
07/22/02	17:05:39	75.448	07/22/02	18:11:39	73.514	07/22/02	19:17:39	76.358	07/22/02	20:23:39	75.078
07/22/02	17:06:39	76.842	07/22/02	18:12:39	74.851	07/22/02	19:18:39	75.078	07/22/02	20:24:39	75.221
07/22/02	17:07:39	76.614	07/22/02	18:13:39	74.851	07/22/02	19:19:39	75.221	07/22/02	20:25:39	74.367
07/22/02	17:08:39	76.870	07/22/02	18:14:39	75.164	07/22/02	19:20:39	74.737	07/22/02	20:26:39	75.107
07/22/02	17:09:39	76.927	07/22/02	18:15:39	75.590	07/22/02	19:21:39	75.931	07/22/02	20:27:39	76.074
07/22/02	17:10:39	76.500	07/22/02	18:16:39	76.614	07/22/02	19:22:39	75.761	07/22/02	20:28:39	74.965
07/22/02	17:11:39	77.524	07/22/02	18:17:39	75.761	07/22/02	19:23:39	73.628	07/22/02	20:29:39	76.017
07/22/02	17:12:39	77.638	07/22/02	18:18:39	75.875	07/22/02	19:24:39	74.481	07/22/02	20:30:39	74.538
07/22/02	17:13:39	76.358	07/22/02	18:19:39	75.505	07/22/02	19:25:39	76.017	07/22/02	20:31:39	74.225
07/22/02	17:14:39	73.571	07/22/02	18:20:39	75.391	07/22/02	19:26:39	75.221	07/22/02	20:32:39	75.391
07/22/02	17:15:39	76.443	07/22/02	18:21:39	75.562	07/22/02	19:27:39	74.367	07/22/02	20:33:39	76.244
07/22/02	17:16:39	77.638	07/22/02	18:22:39	78.377	07/22/02	19:28:39	74.737	07/22/02	20:34:39	75.164
07/22/02	17:17:39	77.581	07/22/02	18:23:39	76.017	07/22/02	19:29:39	75.021	07/22/02	20:35:39	75.107
07/22/02	17:18:39	77.894	07/22/02	18:24:39	75.391	07/22/02	19:30:39	75.107	07/22/02	20:36:39	74.595
07/22/02	17:19:39	77.524	07/22/02	18:25:39	73.998	07/22/02	19:31:39	75.590	07/22/02	20:37:39	74.481
07/22/02	17:20:39	76.131	07/22/02	18:26:39	77.154	07/22/02	19:32:39	74.367	07/22/02	20:38:39	76.074
07/22/02	17:21:39	74.965	07/22/02	18:27:39	77.211	07/22/02	19:33:39	75.505	07/22/02	20:39:39	75.562
07/22/02	17:22:39	75.931	07/22/02	18:28:39	75.590	07/22/02	19:34:39	75.221	07/22/02	20:40:39	74.481
07/22/02	17:23:39	76.984	07/22/02	18:29:39	75.505	07/22/02	19:35:39	74.680	07/22/02	20:41:39	75.078
07/22/02	17:24:39	78.548	07/22/02	18:30:39	76.244	07/22/02	19:36:39	74.481	07/22/02	20:42:39	75.107
07/22/02	17:25:39	77.467	07/22/02	18:31:39	75.590	07/22/02	19:37:39	75.448	07/22/02	20:43:39	76.500
07/22/02	17:26:39	76.785	07/22/02	18:32:39	74.310	07/22/02	19:38:39	75.562	07/22/02	20:44:39	75.334
07/22/02	17:27:39	77.154	07/22/02	18:33:39	77.154	07/22/02	19:39:39	75.931	07/22/02	20:45:39	75.448
07/22/02	17:28:39	76.074	07/22/02	18:34:39	56.849	07/22/02	19:40:39	75.391	07/22/02	20:46:39	75.277
07/22/02	17:29:39	76.074	07/22/02	18:35:39	64.016	07/22/02	19:41:39	74.168	07/22/02	20:47:39	74.254
07/22/02	17:30:39	77.353	07/22/02	18:36:39	62.423	07/22/02	19:42:39	75.021	07/22/02	20:48:39	73.941
07/22/02	17:31:39	77.211	07/22/02	18:37:39	61.712	07/22/02	19:43:39	74.168	07/22/02	20:49:39	76.187
07/22/02	17:32:39	77.097	07/22/02	18:38:39	60.489	07/22/02	19:44:39	75.704	07/22/02	20:50:39	75.078
07/22/02	17:33:39	75.704	07/22/02	18:39:39	62.025	07/22/02	19:45:39	76.671	07/22/02	20:51:39	75.931
07/22/02	17:34:39	75.761	07/22/02	18:40:39	74.965	07/22/02	19:46:39	76.187	07/22/02	20:52:39	75.875
07/22/02	17:35:39	76.500	07/22/02	18:41:39	77.524	07/22/02	19:47:39	74.680	07/22/02	20:53:39	77.638
07/22/02	17:36:39	75.647	07/22/02	18:42:39	74.538	07/22/02	19:48:39	75.931	07/22/02	20:54:39	77.211
07/22/02	17:37:39	78.207	07/22/02	18:43:39	75.590	07/22/02	19:49:39	75.704	07/22/02	20:55:39	76.443
07/22/02	17:38:39	74.538	07/22/02	18:44:39	75.931	07/22/02	19:50:39	75.590	07/22/02	20:56:39	76.671
07/22/02	17:39:39	76.187	07/22/02	18:45:39	76.017	07/22/02	19:51:39	75.761	07/22/02	20:57:39	77.041
07/22/02	17:40:39	76.785	07/22/02	18:46:39	71.979	07/22/02	19:52:39	76.131	07/22/02	20:58:39	75.761
07/22/02	17:41:39	76.927	07/22/02	18:47:39	73.315	07/22/02	19:53:39	76.301	07/22/02	20:59:39	76.244
07/22/02	17:42:39	75.647	07/22/02	18:48:39	73.514	07/22/02	19:54:39	75.875	07/22/02	21:00:39	75.391
07/22/02	17:43:39	74.481	07/22/02	18:49:39	74.794	07/22/02	19:55:39	75.221	07/22/02	21:01:39	75.164
07/22/02	17:44:39	76.557	07/22/02	18:50:39	73.571	07/22/02	19:56:39	74.737	07/22/02	21:02:39	74.310
07/22/02	17:45:39	77.638	07/22/02	18:51:39	73.031	07/22/02	19:57:39	75.931	07/22/02	21:03:39	73.457
07/22/02	17:46:39	76.842	07/22/02	18:52:39	73.685	07/22/02	19:58:39	74.424	07/22/02	21:04:39	76.301

DIXON AND BELVIN - NO. 7550 cont.

Date	Time	Pres (PSI)
07/22/02	21:05:39	74.851
07/22/02	21:06:39	74.310
07/22/02	21:07:39	73.941
07/22/02	21:08:39	75.704
07/22/02	21:09:39	75.875
07/22/02	21:10:39	74.055
07/22/02	21:11:39	73.628
07/22/02	21:12:39	75.334
07/22/02	21:13:39	74.481
07/22/02	21:14:39	74.794
07/22/02	21:15:39	75.391
07/22/02	21:16:39	74.965
07/22/02	21:17:39	75.988
07/22/02	21:18:39	75.818
07/22/02	21:19:39	75.505
07/22/02	21:20:39	74.652
07/22/02	21:21:39	75.107
07/22/02	21:22:39	77.780
07/22/02	21:23:39	76.728
07/22/02	21:24:39	76.187
07/22/02	21:25:39	76.557
07/22/02	21:26:39	75.988
07/22/02	21:27:39	75.334
07/22/02	21:28:39	76.244
07/22/02	21:29:39	75.931
07/22/02	21:30:39	75.334
07/22/02	21:31:39	74.680
07/22/02	21:32:39	76.443
07/22/02	21:33:39	75.761
07/22/02	21:34:39	75.078
07/22/02	21:35:39	76.984
07/22/02	21:36:39	76.131
07/22/02	21:37:39	75.647
07/22/02	21:38:39	75.931
07/22/02	21:39:39	75.448
07/22/02	21:40:39	77.211
07/22/02	21:41:39	76.785
07/22/02	21:42:39	76.301
07/22/02	21:43:39	76.187
07/22/02	21:44:39	76.301
07/22/02	21:45:39	76.785
07/22/02	21:46:39	75.931
07/22/02	21:47:39	76.728
07/22/02	21:48:39	78.377
07/22/02	21:49:39	78.121
07/22/02	21:50:39	77.837
07/22/02	21:51:39	78.434
07/22/02	21:52:39	78.974
07/22/02	21:53:39	78.491
07/22/02	21:54:39	77.837
07/22/02	21:55:39	77.410
07/22/02	21:56:39	77.894
07/22/02	21:57:39	77.780
07/22/02	21:58:39	77.894
07/22/02	21:59:39	76.984
07/22/02	22:00:39	75.704
07/22/02	22:01:39	77.268
07/22/02	22:02:39	76.500
07/22/02	22:03:39	77.041
07/22/02	22:04:39	74.424
07/22/02	22:05:39	59.750
07/22/02	22:06:39	62.423
07/22/02	22:07:39	74.254
07/22/02	22:08:39	77.211
07/22/02	22:09:39	73.998
07/22/02	22:10:39	74.965

Date	Time	Pres (PSI)
07/22/02	22:11:39	74.055
07/22/02	22:12:39	74.908
07/22/02	22:13:39	75.078
07/22/02	22:14:39	75.277
07/22/02	22:15:39	75.221
07/22/02	22:16:39	75.590
07/22/02	22:17:39	74.481
07/22/02	22:18:39	79.060
07/22/02	22:19:39	74.680
07/22/02	22:20:39	75.505
07/22/02	22:21:39	76.187
07/22/02	22:22:39	76.870
07/22/02	22:23:39	75.334
07/22/02	22:24:39	76.785
07/22/02	22:25:39	76.671
07/22/02	22:26:39	76.614
07/22/02	22:27:39	77.353
07/22/02	22:28:39	77.951
07/22/02	22:29:39	77.695
07/22/02	22:30:39	78.178
07/22/02	22:31:39	76.728
07/22/02	22:32:39	77.268
07/22/02	22:33:39	78.804
07/22/02	22:34:39	78.121
07/22/02	22:35:39	78.918
07/22/02	22:36:39	78.121
07/22/02	22:37:39	78.690
07/22/02	22:38:39	77.638
07/22/02	22:39:39	79.401
07/22/02	22:40:39	79.117
07/22/02	22:41:39	79.600
07/22/02	22:42:39	78.178
07/22/02	22:43:39	78.861
07/22/02	22:44:39	78.207
07/22/02	22:45:39	79.401
07/22/02	22:46:39	79.401
07/22/02	22:47:39	79.458
07/22/02	22:48:39	79.714
07/22/02	22:49:39	78.861
07/22/02	22:50:39	78.121
07/22/02	22:51:39	80.027
07/22/02	22:52:39	75.988
07/22/02	22:53:39	64.698
07/22/02	22:54:39	68.992
07/22/02	22:55:39	67.229
07/22/02	22:56:39	65.182
07/22/02	22:57:39	65.893
07/22/02	22:58:39	75.391
07/22/02	22:59:39	78.008
07/22/02	23:00:39	76.244
07/22/02	23:01:39	75.704
07/22/02	23:02:39	76.557
07/22/02	23:03:39	76.557
07/22/02	23:04:39	77.410
07/22/02	23:05:39	76.131
07/22/02	23:06:39	76.301
07/22/02	23:07:39	76.244
07/22/02	23:08:39	76.244
07/22/02	23:09:39	76.785
07/22/02	23:10:39	77.297
07/22/02	23:11:39	76.671
07/22/02	23:12:39	76.927
07/22/02	23:13:39	75.704
07/22/02	23:14:39	76.074
07/22/02	23:15:39	77.268
07/22/02	23:16:39	76.443

Date	Time	Pres (PSI)
07/22/02	23:17:39	77.297
07/22/02	23:18:39	76.785
07/22/02	23:19:39	76.614
07/22/02	23:20:39	76.728
07/22/02	23:21:39	76.358
07/22/02	23:22:39	76.187
07/22/02	23:23:39	76.443
07/22/02	23:24:39	76.870
07/22/02	23:25:39	76.358
07/22/02	23:26:39	76.842
07/22/02	23:27:39	76.671
07/22/02	23:28:39	78.121
07/22/02	23:29:39	76.358
07/22/02	23:30:39	76.728
07/22/02	23:31:39	76.017
07/22/02	23:32:39	77.410
07/22/02	23:33:39	76.500
07/22/02	23:34:39	76.984
07/22/02	23:35:39	87.023
07/22/02	23:36:39	77.097
07/22/02	23:37:39	79.970
07/22/02	23:38:39	79.117
07/22/02	23:39:39	78.747
07/22/02	23:40:39	79.117
07/22/02	23:41:39	79.486
07/22/02	23:42:39	78.918
07/22/02	23:43:39	78.491
07/22/02	23:44:39	80.197
07/22/02	23:45:39	79.458
07/22/02	23:46:39	80.510
07/22/02	23:47:39	80.084
07/22/02	23:48:39	79.771
07/22/02	23:49:39	79.884
07/22/02	23:50:39	80.453
07/22/02	23:51:39	80.453
07/22/02	23:52:39	79.174
07/22/02	23:53:39	79.401
07/22/02	23:54:39	79.771
07/22/02	23:55:39	79.600
07/22/02	23:56:39	80.254
07/22/02	23:57:39	80.027
07/22/02	23:58:39	80.254
07/22/02	23:59:39	80.624
07/23/02	00:00:39	79.117
07/23/02	00:01:39	80.368
07/23/02	00:02:39	79.913
07/23/02	00:03:39	80.624
07/23/02	00:04:39	80.567
07/23/02	00:05:39	79.714
07/23/02	00:06:39	80.510
07/23/02	00:07:39	79.458
07/23/02	00:08:39	80.311
07/23/02	00:09:39	80.311
07/23/02	00:10:39	83.183
07/23/02	00:11:39	81.420
07/23/02	00:12:39	81.164
07/23/02	00:13:39	82.103
07/23/02	00:14:39	81.050
07/23/02	00:15:39	81.961
07/23/02	00:16:39	82.074
07/23/02	00:17:39	81.733
07/23/02	00:18:39	82.103
07/23/02	00:19:39	81.676
07/23/02	00:20:39	82.017
07/23/02	00:21:39	82.017
07/23/02	00:22:39	82.017

Date	Time	Pres (PSI)
07/23/02	00:23:39	82.273
07/23/02	00:24:39	82.871
07/23/02	00:25:39	81.961
07/23/02	00:26:39	81.904
07/23/02	00:27:39	82.074
07/23/02	00:28:39	81.363
07/23/02	00:29:39	81.420
07/23/02	00:30:39	82.643
07/23/02	00:31:39	81.847
07/23/02	00:32:39	81.420
07/23/02	00:33:39	82.160
07/23/02	00:34:39	81.363
07/23/02	00:35:39	81.961
07/23/02	00:36:39	82.757
07/23/02	00:37:39	81.676
07/23/02	00:38:39	82.643
07/23/02	00:39:39	82.216
07/23/02	00:40:39	82.273
07/23/02	00:41:39	82.273
07/23/02	00:42:39	81.648
07/23/02	00:43:39	81.250
07/23/02	00:44:39	82.814
07/23/02	00:45:39	81.847
07/23/02	00:46:39	82.387
07/23/02	00:47:39	81.961
07/23/02	00:48:39	81.961
07/23/02	00:49:39	81.420
07/23/02	00:50:39	82.273
07/23/02	00:51:39	82.330
07/23/02	00:52:39	81.733
07/23/02	00:53:39	82.700
07/23/02	00:54:39	82.017
07/23/02	00:55:39	82.216
07/23/02	00:56:39	81.477
07/23/02	00:57:39	82.501
07/23/02	00:58:39	81.961
07/23/02	00:59:39	82.103
07/23/02	01:00:39	82.017
07/23/02	01:01:39	81.733
07/23/02	01:02:39	82.387
07/23/02	01:03:39	81.790
07/23/02	01:04:39	81.306
07/23/02	01:05:39	81.790
07/23/02	01:06:39	81.363
07/23/02	01:07:39	82.700
07/23/02	01:08:39	81.733
07/23/02	01:09:39	81.904
07/23/02	01:10:39	65.352
07/23/02	01:11:39	78.804
07/23/02	01:12:39	77.638
07/23/02	01:13:39	85.430
07/23/02	01:14:39	81.961
07/23/02	01:15:39	81.250
07/23/02	01:16:39	82.387
07/23/02	01:17:39	82.017
07/23/02	01:18:39	81.477
07/23/02	01:19:39	81.676
07/23/02	01:20:39	81.904
07/23/02	01:21:39	82.017
07/23/02	01:22:39	82.103
07/23/02	01:23:39	81.961
07/23/02	01:24:39	81.477
07/23/02	01:25:39	81.534
07/23/02	01:26:39	81.250
07/23/02	01:27:39	82.501
07/23/02	01:28:39	82.216

DIXON AND BELVIN - NO. 7550 cont.

Date	Time	Pres (PSI)
07/23/02	01:29:39	81.676
07/23/02	01:30:39	81.050
07/23/02	01:31:39	82.160
07/23/02	01:32:39	81.904
07/23/02	01:33:39	82.501
07/23/02	01:34:39	81.733
07/23/02	01:35:39	82.103
07/23/02	01:36:39	82.103
07/23/02	01:37:39	81.733
07/23/02	01:38:39	82.074
07/23/02	01:39:39	81.790
07/23/02	01:40:39	82.330
07/23/02	01:41:39	82.103
07/23/02	01:42:39	82.444
07/23/02	01:43:39	82.529
07/23/02	01:44:39	82.387
07/23/02	01:45:39	82.814
07/23/02	01:46:39	82.643
07/23/02	01:47:39	82.216
07/23/02	01:48:39	82.984
07/23/02	01:49:39	82.700
07/23/02	01:50:39	82.501
07/23/02	01:51:39	82.017
07/23/02	01:52:39	83.837
07/23/02	01:53:39	83.240
07/23/02	01:54:39	83.013
07/23/02	01:55:39	83.354
07/23/02	01:56:39	82.700
07/23/02	01:57:39	83.126
07/23/02	01:58:39	82.927
07/23/02	01:59:39	82.216
07/23/02	02:00:39	82.586
07/23/02	02:01:39	82.273
07/23/02	02:02:39	82.814
07/23/02	02:03:39	82.700
07/23/02	02:04:39	82.160
07/23/02	02:05:39	82.586
07/23/02	02:06:39	81.676
07/23/02	02:07:39	82.927
07/23/02	02:08:39	81.961
07/23/02	02:09:39	81.847
07/23/02	02:10:39	82.529
07/23/02	02:11:39	82.160
07/23/02	02:12:39	82.273
07/23/02	02:13:39	81.790
07/23/02	02:14:39	82.103
07/23/02	02:15:39	82.103
07/23/02	02:16:39	82.160
07/23/02	02:17:39	82.814
07/23/02	02:18:39	82.529
07/23/02	02:19:39	81.961
07/23/02	02:20:39	82.700
07/23/02	02:21:39	82.927
07/23/02	02:22:39	82.160
07/23/02	02:23:39	82.984
07/23/02	02:24:39	82.700
07/23/02	02:25:39	82.871
07/23/02	02:26:39	81.733
07/23/02	02:27:39	82.700
07/23/02	02:28:39	82.330
07/23/02	02:29:39	82.017
07/23/02	02:30:39	82.103
07/23/02	02:31:39	81.676
07/23/02	02:32:39	82.700
07/23/02	02:33:39	81.790
07/23/02	02:34:39	81.904
07/23/02	02:35:39	82.330
07/23/02	02:36:39	83.126
07/23/02	02:37:39	82.216
07/23/02	02:38:39	82.387
07/23/02	02:39:39	81.420
07/23/02	02:40:39	82.529
07/23/02	02:41:39	82.444
07/23/02	02:42:39	81.961
07/23/02	02:43:39	82.017
07/23/02	02:44:39	82.444
07/23/02	02:45:39	81.904
07/23/02	02:46:39	80.937
07/23/02	02:47:39	82.643
07/23/02	02:48:39	82.586
07/23/02	02:49:39	82.074
07/23/02	02:50:39	82.700
07/23/02	02:51:39	81.847
07/23/02	02:52:39	81.961
07/23/02	02:53:39	82.273
07/23/02	02:54:39	81.648
07/23/02	02:55:39	82.216
07/23/02	02:56:39	82.160
07/23/02	02:57:39	81.648
07/23/02	02:58:39	82.387
07/23/02	02:59:39	81.676
07/23/02	03:00:39	82.444
07/23/02	03:01:39	81.050
07/23/02	03:02:39	82.160
07/23/02	03:03:39	82.160
07/23/02	03:04:39	82.330
07/23/02	03:05:39	81.733
07/23/02	03:06:39	80.823
07/23/02	03:07:39	82.529
07/23/02	03:08:39	82.387
07/23/02	03:09:39	82.387
07/23/02	03:10:39	81.904
07/23/02	03:11:39	82.387
07/23/02	03:12:39	82.103
07/23/02	03:13:39	83.070
07/23/02	03:14:39	82.160
07/23/02	03:15:39	81.676
07/23/02	03:16:39	82.444
07/23/02	03:17:39	82.216
07/23/02	03:18:39	82.529
07/23/02	03:19:39	82.017
07/23/02	03:20:39	82.330
07/23/02	03:21:39	82.017
07/23/02	03:22:39	82.529
07/23/02	03:23:39	82.160
07/23/02	03:24:39	81.847
07/23/02	03:25:39	82.586
07/23/02	03:26:39	81.847
07/23/02	03:27:39	82.643
07/23/02	03:28:39	82.871
07/23/02	03:29:39	82.444
07/23/02	03:30:39	82.586
07/23/02	03:31:39	82.330
07/23/02	03:32:39	82.529
07/23/02	03:33:39	83.126
07/23/02	03:34:39	82.017
07/23/02	03:35:39	82.984
07/23/02	03:36:39	82.529
07/23/02	03:37:39	83.126
07/23/02	03:38:39	82.586
07/23/02	03:39:39	82.529
07/23/02	03:40:39	82.074
07/23/02	03:41:39	82.814
07/23/02	03:42:39	81.961
07/23/02	03:43:39	82.700
07/23/02	03:44:39	82.643
07/23/02	03:45:39	81.733
07/23/02	03:46:39	82.700
07/23/02	03:47:39	82.273
07/23/02	03:48:39	82.160
07/23/02	03:49:39	82.273
07/23/02	03:50:39	82.017
07/23/02	03:51:39	82.160
07/23/02	03:52:39	82.444
07/23/02	03:53:39	82.387
07/23/02	03:54:39	82.216
07/23/02	03:55:39	82.387
07/23/02	03:56:39	81.847
07/23/02	03:57:39	82.700
07/23/02	03:58:39	82.103
07/23/02	03:59:39	82.586
07/23/02	04:00:39	81.790
07/23/02	04:01:39	82.273
07/23/02	04:02:39	81.961
07/23/02	04:03:39	81.904
07/23/02	04:04:39	82.017
07/23/02	04:05:39	82.074
07/23/02	04:06:39	81.904
07/23/02	04:07:39	81.961
07/23/02	04:08:39	81.904
07/23/02	04:09:39	82.074
07/23/02	04:10:39	82.074
07/23/02	04:11:39	81.961
07/23/02	04:12:39	81.676
07/23/02	04:13:39	81.534
07/23/02	04:14:39	81.961
07/23/02	04:15:39	81.790
07/23/02	04:16:39	81.961
07/23/02	04:17:39	82.103
07/23/02	04:18:39	82.586
07/23/02	04:19:39	81.250
07/23/02	04:20:39	82.387
07/23/02	04:21:39	82.160
07/23/02	04:22:39	82.160
07/23/02	04:23:39	82.529
07/23/02	04:24:39	82.160
07/23/02	04:25:39	81.847
07/23/02	04:26:39	81.477
07/23/02	04:27:39	82.501
07/23/02	04:28:39	81.676
07/23/02	04:29:39	82.330
07/23/02	04:30:39	81.904
07/23/02	04:31:39	82.074
07/23/02	04:32:39	81.847
07/23/02	04:33:39	82.529
07/23/02	04:34:39	82.330
07/23/02	04:35:39	82.103
07/23/02	04:36:39	81.847
07/23/02	04:37:39	82.017
07/23/02	04:38:39	81.904
07/23/02	04:39:39	81.904
07/23/02	04:40:39	82.103
07/23/02	04:41:39	82.586
07/23/02	04:42:39	82.160
07/23/02	04:43:39	82.216
07/23/02	04:44:39	81.676
07/23/02	04:45:39	82.643
07/23/02	04:46:39	81.107
07/23/02	04:47:39	82.586
07/23/02	04:48:39	82.273
07/23/02	04:49:39	80.937
07/23/02	04:50:39	82.330
07/23/02	04:51:39	81.733
07/23/02	04:52:39	81.164
07/23/02	04:53:39	82.444
07/23/02	04:54:39	81.904
07/23/02	04:55:39	81.591
07/23/02	04:56:39	81.904
07/23/02	04:57:39	72.604
07/23/02	04:58:39	79.600
07/23/02	04:59:39	79.828
07/23/02	05:00:39	78.377
07/23/02	05:01:39	79.287
07/23/02	05:02:39	78.320
07/23/02	05:03:39	78.121
07/23/02	05:04:39	78.064
07/23/02	05:05:39	78.377
07/23/02	05:06:39	76.984
07/23/02	05:07:39	77.581
07/23/02	05:08:39	76.842
07/23/02	05:09:39	76.671
07/23/02	05:10:39	76.358
07/23/02	05:11:39	77.353
07/23/02	05:12:39	77.041
07/23/02	05:13:39	77.297
07/23/02	05:14:39	76.728
07/23/02	05:15:39	76.984
07/23/02	05:16:39	77.268
07/23/02	05:17:39	77.154
07/23/02	05:18:39	77.638
07/23/02	05:19:39	77.268
07/23/02	05:20:39	76.927
07/23/02	05:21:39	77.041
07/23/02	05:22:39	76.870
07/23/02	05:23:39	76.927
07/23/02	05:24:39	76.301
07/23/02	05:25:39	76.358
07/23/02	05:26:39	74.310
07/23/02	05:27:39	75.448
07/23/02	05:28:39	75.590
07/23/02	05:29:39	75.107
07/23/02	05:30:39	74.851
07/23/02	05:31:39	75.448
07/23/02	05:32:39	74.481
07/23/02	05:33:39	75.164
07/23/02	05:34:39	75.164
07/23/02	05:35:39	75.505
07/23/02	05:36:39	74.310
07/23/02	05:37:39	72.604
07/23/02	05:38:39	73.628
07/23/02	05:39:39	74.254
07/23/02	05:40:39	73.144
07/23/02	05:41:39	73.827
07/23/02	05:42:39	72.832
07/23/02	05:43:39	73.457
07/23/02	05:44:39	71.495
07/23/02	05:45:39	72.178
07/23/02	05:46:39	71.211
07/23/02	05:47:39	69.135
07/23/02	05:48:39	81.477
07/23/02	05:49:39	80.027
07/23/02	05:50:39	79.543
07/23/02	05:51:39	82.216
07/23/02	05:52:39	80.880

DIXON AND BELVIN - NO. 7550 cont.

Date	Time	Pres (PSI)
07/23/02	05:53:39	80.197
07/23/02	05:54:39	80.624
07/23/02	05:55:39	79.657
07/23/02	05:56:39	80.368
07/23/02	05:57:39	79.884
07/23/02	05:58:39	80.140
07/23/02	05:59:39	79.344
07/23/02	06:00:39	79.486
07/23/02	06:01:39	78.918
07/23/02	06:02:39	79.714
07/23/02	06:03:39	81.420
07/23/02	06:04:39	78.974
07/23/02	06:05:39	78.491
07/23/02	06:06:39	79.060
07/23/02	06:07:39	80.197
07/23/02	06:08:39	78.434
07/23/02	06:09:39	79.600
07/23/02	06:10:39	78.974
07/23/02	06:11:39	80.510
07/23/02	06:12:39	80.084
07/23/02	06:13:39	79.117
07/23/02	06:14:39	79.344
07/23/02	06:15:39	79.060
07/23/02	06:16:39	78.605
07/23/02	06:17:39	79.060
07/23/02	06:18:39	77.723
07/23/02	06:19:39	78.633
07/23/02	06:20:39	77.723
07/23/02	06:21:39	79.771
07/23/02	06:22:39	78.633
07/23/02	06:23:39	58.840
07/23/02	06:24:39	70.301
07/23/02	06:25:39	69.192
07/23/02	06:26:39	80.027
07/23/02	06:27:39	78.207
07/23/02	06:28:39	77.837
07/23/02	06:29:39	78.605
07/23/02	06:30:39	78.008
07/23/02	06:31:39	77.211
07/23/02	06:32:39	77.353
07/23/02	06:33:39	78.008
07/23/02	06:34:39	77.297
07/23/02	06:35:39	77.154
07/23/02	06:36:39	78.064
07/23/02	06:37:39	77.894
07/23/02	06:38:39	78.377
07/23/02	06:39:39	77.041
07/23/02	06:40:39	75.647
07/23/02	06:41:39	78.491
07/23/02	06:42:39	77.097
07/23/02	06:43:39	78.178
07/23/02	06:44:39	77.353
07/23/02	06:45:39	76.785
07/23/02	06:46:39	77.467
07/23/02	06:47:39	77.723
07/23/02	06:48:39	76.017
07/23/02	06:49:39	76.842
07/23/02	06:50:39	76.500
07/23/02	06:51:39	76.074
07/23/02	06:52:39	77.297
07/23/02	06:53:39	77.268
07/23/02	06:54:39	76.131
07/23/02	06:55:39	77.780
07/23/02	06:56:39	76.500
07/23/02	06:57:39	76.301
07/23/02	06:58:39	75.988
07/23/02	06:59:39	76.614
07/23/02	07:00:39	75.107
07/23/02	07:01:39	75.448
07/23/02	07:02:39	75.562
07/23/02	07:03:39	75.021
07/23/02	07:04:39	75.761
07/23/02	07:05:39	76.842
07/23/02	07:06:39	75.875
07/23/02	07:07:39	76.557
07/23/02	07:08:39	74.481
07/23/02	07:09:39	75.761
07/23/02	07:10:39	74.908
07/23/02	07:11:39	72.718
07/23/02	07:12:39	73.685
07/23/02	07:13:39	73.315
07/23/02	07:14:39	73.201
07/23/02	07:15:39	73.201
07/23/02	07:16:39	72.035
07/23/02	07:17:39	72.291
07/23/02	07:18:39	72.832
07/23/02	07:19:39	75.078
07/23/02	07:20:39	75.164
07/23/02	07:21:39	75.448
07/23/02	07:22:39	74.965
07/23/02	07:23:39	75.590
07/23/02	07:24:39	74.310
07/23/02	07:25:39	74.652
07/23/02	07:26:39	74.481
07/23/02	07:27:39	74.794
07/23/02	07:28:39	76.244
07/23/02	07:29:39	75.277
07/23/02	07:30:39	74.055
07/23/02	07:31:39	74.310
07/23/02	07:32:39	75.021
07/23/02	07:33:39	76.187
07/23/02	07:34:39	76.017
07/23/02	07:35:39	76.927
07/23/02	07:36:39	75.761
07/23/02	07:37:39	74.851
07/23/02	07:38:39	79.401
07/23/02	07:39:39	76.842
07/23/02	07:40:39	77.154
07/23/02	07:41:39	76.443
07/23/02	07:42:39	76.500
07/23/02	07:43:39	76.785
07/23/02	07:44:39	75.704
07/23/02	07:45:39	75.164
07/23/02	07:46:39	78.121
07/23/02	07:47:39	77.581
07/23/02	07:48:39	76.671
07/23/02	07:49:39	76.984
07/23/02	07:50:39	77.780
07/23/02	07:51:39	77.467
07/23/02	07:52:39	78.548
07/23/02	07:53:39	75.021
07/23/02	07:54:39	74.794
07/23/02	07:55:39	76.358
07/23/02	07:56:39	74.680
07/23/02	07:57:39	75.818
07/23/02	07:58:39	75.021
07/23/02	07:59:39	78.377
07/23/02	08:00:39	77.837
07/23/02	08:01:39	79.230
07/23/02	08:02:39	78.491
07/23/02	08:03:39	78.747
07/23/02	08:04:39	77.837
07/23/02	08:05:39	74.254
07/23/02	08:06:39	75.704
07/23/02	08:07:39	74.538
07/23/02	08:08:39	74.794
07/23/02	08:09:39	79.287
07/23/02	08:10:39	79.117
07/23/02	08:11:39	79.657
07/23/02	08:12:39	78.861
07/23/02	08:13:39	78.207
07/23/02	08:14:39	78.121
07/23/02	08:15:39	77.410
07/23/02	08:16:39	77.467
07/23/02	08:17:39	78.434
07/23/02	08:18:39	79.174
07/23/02	08:19:39	80.453
07/23/02	08:20:39	78.207
07/23/02	08:21:39	77.097
07/23/02	08:22:39	76.728
07/23/02	08:23:39	77.524
07/23/02	08:24:39	78.690
07/23/02	08:25:39	77.211
07/23/02	08:26:39	77.695
07/23/02	08:27:39	76.728
07/23/02	08:28:39	77.723
07/23/02	08:29:39	76.728
07/23/02	08:30:39	76.358
07/23/02	08:31:39	77.041
07/23/02	08:32:39	78.974
07/23/02	08:33:39	77.837
07/23/02	08:34:39	77.211
07/23/02	08:35:39	76.244
07/23/02	08:36:39	76.301
07/23/02	08:37:39	78.633
07/23/02	08:38:39	77.353
07/23/02	08:39:39	75.590
07/23/02	08:40:39	76.842
07/23/02	08:41:39	78.548
07/23/02	08:42:39	76.785
07/23/02	08:43:39	73.457
07/23/02	08:44:39	74.168
07/23/02	08:45:39	73.998
07/23/02	08:46:39	73.571
07/23/02	08:47:39	73.742
07/23/02	08:48:39	76.017
07/23/02	08:49:39	75.164
07/23/02	08:50:39	75.505
07/23/02	08:51:39	76.301
07/23/02	08:52:39	75.021
07/23/02	08:53:39	76.728
07/23/02	08:54:39	75.818
07/23/02	08:55:39	76.358
07/23/02	08:56:39	73.258
07/23/02	08:57:39	68.509
07/23/02	08:58:39	68.395
07/23/02	08:59:39	69.846
07/23/02	09:00:39	67.684
07/23/02	09:01:39	68.082
07/23/02	09:02:39	69.732
07/23/02	09:03:39	66.575
07/23/02	09:04:39	67.172
07/23/02	09:05:39	68.225
07/23/02	09:06:39	67.315
07/23/02	09:07:39	68.765
07/23/02	09:08:39	67.656
07/23/02	09:09:39	67.485
07/23/02	09:10:39	67.485
07/23/02	09:11:39	67.428
07/23/02	09:12:39	67.315
07/23/02	09:13:39	67.258
07/23/02	09:14:39	67.371
07/23/02	09:15:39	67.485
07/23/02	09:16:39	65.893
07/23/02	09:17:39	67.485
07/23/02	09:18:39	67.059
07/23/02	09:19:39	66.092
07/23/02	09:20:39	69.021
07/23/02	09:21:39	68.225
07/23/02	09:22:39	68.651
07/23/02	09:23:39	73.514
07/23/02	09:24:39	76.301
07/23/02	09:25:39	73.031
07/23/02	09:26:39	76.017
07/23/02	09:27:39	76.842
07/23/02	09:28:39	73.571
07/23/02	09:29:39	74.310
07/23/02	09:30:39	74.680
07/23/02	09:31:39	75.164
07/23/02	09:32:39	74.481
07/23/02	09:33:39	73.941
07/23/02	09:34:39	74.225
07/23/02	09:35:39	77.581
07/23/02	09:36:39	75.761
07/23/02	09:37:39	74.168
07/23/02	09:38:39	76.728
07/23/02	09:39:39	75.647
07/23/02	09:40:39	74.965
07/23/02	09:41:39	76.415
07/23/02	09:42:39	75.505
07/23/02	09:43:39	75.221
07/23/02	09:44:39	75.164
07/23/02	09:45:39	73.941
07/23/02	09:46:39	76.301
07/23/02	09:47:39	72.945
07/23/02	09:48:39	76.131
07/23/02	09:49:39	76.728
07/23/02	09:50:39	77.695
07/23/02	09:51:39	76.017
07/23/02	09:52:39	76.358
07/23/02	09:53:39	72.889
07/23/02	09:54:39	68.594
07/23/02	09:55:39	70.301
07/23/02	09:56:39	69.874
07/23/02	09:57:39	69.561
07/23/02	09:58:39	70.955
07/23/02	09:59:39	67.912
07/23/02	10:00:39	71.381
07/23/02	10:01:39	69.675
07/23/02	10:02:39	70.784
07/23/02	10:03:39	68.281
07/23/02	10:04:39	68.082
07/23/02	10:05:39	69.675
07/23/02	10:06:39	68.651
07/23/02	10:07:39	67.855
07/23/02	10:08:39	70.215
07/23/02	10:09:39	68.765
07/23/02	10:10:39	68.452
07/23/02	10:11:39	69.021
07/23/02	10:12:39	67.912
07/23/02	10:13:39	68.708
07/23/02	10:14:39	68.936
07/23/02	10:15:39	67.912
07/23/02	10:16:39	68.879

DIXON AND BELVIN - NO. 7550 cont.

Date	Time	Pres (PSI)	Date	Time	Pres (PSI)	Date	Time	Pres (PSI)	Date	Time	Pres (PSI)
07/23/02	10:17:39	68.936	07/23/02	11:23:39	72.405	07/23/02	12:29:39	74.538	07/23/02	13:35:39	72.178
07/23/02	10:18:39	69.874	07/23/02	11:24:39	71.922	07/23/02	12:30:39	74.055	07/23/02	13:36:39	71.438
07/23/02	10:19:39	77.524	07/23/02	11:25:39	73.628	07/23/02	12:31:39	72.889	07/23/02	13:37:39	72.121
07/23/02	10:20:39	75.988	07/23/02	11:26:39	73.998	07/23/02	12:32:39	73.884	07/23/02	13:38:39	69.931
07/23/02	10:21:39	77.467	07/23/02	11:27:39	73.685	07/23/02	12:33:39	75.875	07/23/02	13:39:39	70.158
07/23/02	10:22:39	77.041	07/23/02	11:28:39	71.808	07/23/02	12:34:39	75.164	07/23/02	13:40:39	70.528
07/23/02	10:23:39	75.391	07/23/02	11:29:39	72.405	07/23/02	12:35:39	75.334	07/23/02	13:41:39	71.979
07/23/02	10:24:39	75.875	07/23/02	11:30:39	73.685	07/23/02	12:36:39	73.457	07/23/02	13:42:39	77.894
07/23/02	10:25:39	75.078	07/23/02	11:31:39	74.168	07/23/02	12:37:39	75.221	07/23/02	13:43:39	74.965
07/23/02	10:26:39	77.410	07/23/02	11:32:39	73.941	07/23/02	12:38:39	73.941	07/23/02	13:44:39	74.851
07/23/02	10:27:39	75.818	07/23/02	11:33:39	74.851	07/23/02	12:39:39	74.055	07/23/02	13:45:39	75.818
07/23/02	10:28:39	73.457	07/23/02	11:34:39	74.225	07/23/02	12:40:39	73.827	07/23/02	13:46:39	73.685
07/23/02	10:29:39	74.737	07/23/02	11:35:39	73.685	07/23/02	12:41:39	75.562	07/23/02	13:47:39	70.784
07/23/02	10:30:39	75.818	07/23/02	11:36:39	75.107	07/23/02	12:42:39	76.500	07/23/02	13:48:39	73.144
07/23/02	10:31:39	73.315	07/23/02	11:37:39	73.827	07/23/02	12:43:39	75.875	07/23/02	13:49:39	72.348
07/23/02	10:32:39	73.941	07/23/02	11:38:39	73.742	07/23/02	12:44:39	75.931	07/23/02	13:50:39	72.121
07/23/02	10:33:39	77.297	07/23/02	11:39:39	74.595	07/23/02	12:45:39	72.064	07/23/02	13:51:39	72.718
07/23/02	10:34:39	74.965	07/23/02	11:40:39	75.277	07/23/02	12:46:39	76.443	07/23/02	13:52:39	73.742
07/23/02	10:35:39	76.301	07/23/02	11:41:39	73.315	07/23/02	12:47:39	75.704	07/23/02	13:53:39	72.889
07/23/02	10:36:39	76.927	07/23/02	11:42:39	73.884	07/23/02	12:48:39	75.391	07/23/02	13:54:39	72.035
07/23/02	10:37:39	75.505	07/23/02	11:43:39	74.794	07/23/02	12:49:39	76.074	07/23/02	13:55:39	73.457
07/23/02	10:38:39	74.680	07/23/02	11:44:39	74.481	07/23/02	12:50:39	76.131	07/23/02	13:56:39	72.121
07/23/02	10:39:39	74.851	07/23/02	11:45:39	74.794	07/23/02	12:51:39	75.277	07/23/02	13:57:39	74.595
07/23/02	10:40:39	77.951	07/23/02	11:46:39	72.945	07/23/02	12:52:39	74.851	07/23/02	13:58:39	71.751
07/23/02	10:41:39	76.842	07/23/02	11:47:39	75.334	07/23/02	12:53:39	74.481	07/23/02	13:59:39	69.988
07/23/02	10:42:39	77.695	07/23/02	11:48:39	74.737	07/23/02	12:54:39	74.254	07/23/02	14:00:39	73.201
07/23/02	10:43:39	75.164	07/23/02	11:49:39	75.875	07/23/02	12:55:39	74.367	07/23/02	14:01:39	70.955
07/23/02	10:44:39	72.547	07/23/02	11:50:39	75.021	07/23/02	12:56:39	72.775	07/23/02	14:02:39	74.424
07/23/02	10:45:39	75.391	07/23/02	11:51:39	72.405	07/23/02	12:57:39	73.088	07/23/02	14:03:39	72.974
07/23/02	10:46:39	73.998	07/23/02	11:52:39	74.652	07/23/02	12:58:39	73.884	07/23/02	14:04:39	72.291
07/23/02	10:47:39	72.661	07/23/02	11:53:39	74.225	07/23/02	12:59:39	73.372	07/23/02	14:05:39	73.685
07/23/02	10:48:39	72.945	07/23/02	11:54:39	74.851	07/23/02	13:00:39	75.107	07/23/02	14:06:39	71.268
07/23/02	10:49:39	72.974	07/23/02	11:55:39	73.884	07/23/02	13:01:39	74.367	07/23/02	14:07:39	74.055
07/23/02	10:50:39	73.827	07/23/02	11:56:39	73.941	07/23/02	13:02:39	74.794	07/23/02	14:08:39	73.088
07/23/02	10:51:39	75.875	07/23/02	11:57:39	75.391	07/23/02	13:03:39	73.315	07/23/02	14:09:39	73.685
07/23/02	10:52:39	75.505	07/23/02	11:58:39	73.201	07/23/02	13:04:39	74.595	07/23/02	14:10:39	73.884
07/23/02	10:53:39	71.637	07/23/02	11:59:39	73.941	07/23/02	13:05:39	73.571	07/23/02	14:11:39	73.400
07/23/02	10:54:39	72.661	07/23/02	12:00:39	74.481	07/23/02	13:06:39	72.775	07/23/02	14:12:39	75.221
07/23/02	10:55:39	74.595	07/23/02	12:01:39	73.685	07/23/02	13:07:39	75.988	07/23/02	14:13:39	73.827
07/23/02	10:56:39	73.628	07/23/02	12:02:39	73.315	07/23/02	13:08:39	47.237	07/23/02	14:14:39	73.742
07/23/02	10:57:39	71.324	07/23/02	12:03:39	73.144	07/23/02	13:09:39	49.427	07/23/02	14:15:39	73.144
07/23/02	10:58:39	72.889	07/23/02	12:04:39	72.775	07/23/02	13:10:39	50.564	07/23/02	14:16:39	72.121
07/23/02	10:59:39	70.102	07/23/02	12:05:39	73.372	07/23/02	13:11:39	48.744	07/23/02	14:17:39	72.974
07/23/02	11:00:39	72.035	07/23/02	12:06:39	72.462	07/23/02	13:12:39	47.720	07/23/02	14:18:39	73.372
07/23/02	11:01:39	72.234	07/23/02	12:07:39	75.078	07/23/02	13:13:39	46.241	07/23/02	14:19:39	75.277
07/23/02	11:02:39	73.799	07/23/02	12:08:39	74.424	07/23/02	13:14:39	45.701	07/23/02	14:20:39	74.424
07/23/02	11:03:39	54.716	07/23/02	12:09:39	74.652	07/23/02	13:15:39	43.881	07/23/02	14:21:39	73.144
07/23/02	11:04:39	53.436	07/23/02	12:10:39	75.761	07/23/02	13:16:39	42.914	07/23/02	14:22:39	73.514
07/23/02	11:05:39	77.524	07/23/02	12:11:39	74.225	07/23/02	13:17:39	41.805	07/23/02	14:23:39	75.078
07/23/02	11:06:39	71.922	07/23/02	12:12:39	73.998	07/23/02	13:18:39	44.535	07/23/02	14:24:39	72.974
07/23/02	11:07:39	73.088	07/23/02	12:13:39	75.107	07/23/02	13:19:39	49.597	07/23/02	14:25:39	72.775
07/23/02	11:08:39	73.827	07/23/02	12:14:39	73.258	07/23/02	13:20:39	68.936	07/23/02	14:26:39	73.144
07/23/02	11:09:39	72.462	07/23/02	12:15:39	74.310	07/23/02	13:21:39	72.035	07/23/02	14:27:39	74.168
07/23/02	11:10:39	73.884	07/23/02	12:16:39	73.457	07/23/02	13:22:39	73.742	07/23/02	14:28:39	74.851
07/23/02	11:11:39	73.372	07/23/02	12:17:39	72.889	07/23/02	13:23:39	73.315	07/23/02	14:29:39	74.225
07/23/02	11:12:39	72.945	07/23/02	12:18:39	75.164	07/23/02	13:24:39	73.941	07/23/02	14:30:39	74.367
07/23/02	11:13:39	72.832	07/23/02	12:19:39	73.685	07/23/02	13:25:39	73.400	07/23/02	14:31:39	73.685
07/23/02	11:14:39	72.462	07/23/02	12:20:39	72.405	07/23/02	13:26:39	71.381	07/23/02	14:32:39	73.742
07/23/02	11:15:39	73.400	07/23/02	12:21:39	75.277	07/23/02	13:27:39	73.457	07/23/02	14:33:39	74.424
07/23/02	11:16:39	73.457	07/23/02	12:22:39	73.827	07/23/02	13:28:39	73.031	07/23/02	14:34:39	73.514
07/23/02	11:17:39	72.405	07/23/02	12:23:39	73.998	07/23/02	13:29:39	71.495	07/23/02	14:35:39	72.945
07/23/02	11:18:39	70.301	07/23/02	12:24:39	71.495	07/23/02	13:30:39	72.462	07/23/02	14:36:39	72.178
07/23/02	11:19:39	72.178	07/23/02	12:25:39	75.704	07/23/02	13:31:39	73.201	07/23/02	14:37:39	73.941
07/23/02	11:20:39	71.979	07/23/02	12:26:39	73.372	07/23/02	13:32:39	73.685	07/23/02	14:38:39	75.021
07/23/02	11:21:39	71.125	07/23/02	12:27:39	75.562	07/23/02	13:33:39	72.889	07/23/02	14:39:39	75.761
07/23/02	11:22:39	73.400	07/23/02	12:28:39	73.400	07/23/02	13:34:39	71.268	07/23/02	14:40:39	73.571

DIXON AND BELVIN - NO. 7550 cont.

Date	Time	Pres (PSI)
07/23/02	14:41:39	74.424
07/23/02	14:42:39	74.652
07/23/02	14:43:39	53.607
07/23/02	14:44:39	55.854
07/23/02	14:45:39	55.370
07/23/02	14:46:39	71.012
07/23/02	14:47:39	73.514
07/23/02	14:48:39	72.234
07/23/02	14:49:39	72.718
07/23/02	14:50:39	74.225
07/23/02	14:51:39	73.372
07/23/02	14:52:39	71.694
07/23/02	14:53:39	72.462
07/23/02	14:54:39	72.291
07/23/02	14:55:39	70.955
07/23/02	14:56:39	73.799
07/23/02	14:57:39	74.481
07/23/02	14:58:39	72.945
07/23/02	14:59:39	73.457
07/23/02	15:00:39	73.742
07/23/02	15:01:39	74.254
07/23/02	15:02:39	74.055
07/23/02	15:03:39	72.035
07/23/02	15:04:39	73.514
07/23/02	15:05:39	73.258
07/23/02	15:06:39	73.088
07/23/02	15:07:39	73.685
07/23/02	15:08:39	73.884
07/23/02	15:09:39	72.945
07/23/02	15:10:39	73.628
07/23/02	15:11:39	74.595
07/23/02	15:12:39	73.400
07/23/02	15:13:39	72.035
07/23/02	15:14:39	73.457
07/23/02	15:15:39	73.031
07/23/02	15:16:39	74.538
07/23/02	15:17:39	76.187
07/23/02	15:18:39	81.790
07/23/02	15:19:39	74.908
07/23/02	15:20:39	75.334
07/23/02	15:21:39	76.614
07/23/02	15:22:39	78.690
07/23/02	15:23:39	77.837
07/23/02	15:24:39	78.008
07/23/02	15:25:39	78.434
07/23/02	15:26:39	77.780
07/23/02	15:27:39	77.268
07/23/02	15:28:39	78.747
07/23/02	15:29:39	78.320
07/23/02	15:30:39	77.837
07/23/02	15:31:39	78.605
07/23/02	15:32:39	76.074
07/23/02	15:33:39	77.581
07/23/02	15:34:39	76.614
07/23/02	15:35:39	74.111
07/23/02	15:36:39	77.695
07/23/02	15:37:39	78.121
07/23/02	15:38:39	77.410
07/23/02	15:39:39	75.562
07/23/02	15:40:39	77.581
07/23/02	15:41:39	77.154
07/23/02	15:42:39	77.353
07/23/02	15:43:39	79.117
07/23/02	15:44:39	78.974
07/23/02	15:45:39	76.785
07/23/02	15:46:39	76.301
07/23/02	15:47:39	78.491
07/23/02	15:48:39	78.064
07/23/02	15:49:39	78.974
07/23/02	15:50:39	78.064
07/23/02	15:51:39	77.780
07/23/02	15:52:39	77.268
07/23/02	15:53:39	78.207
07/23/02	15:54:39	77.097
07/23/02	15:55:39	77.410
07/23/02	15:56:39	76.728
07/23/02	15:57:39	77.524
07/23/02	15:58:39	77.581
07/23/02	15:59:39	75.647
07/23/02	16:00:39	76.358
07/23/02	16:01:39	75.761
07/23/02	16:02:39	76.358
07/23/02	16:03:39	75.505
07/23/02	16:04:39	75.590
07/23/02	16:05:39	76.842
07/23/02	16:06:39	75.647
07/23/02	16:07:39	75.647
07/23/02	16:08:39	76.984
07/23/02	16:09:39	75.704
07/23/02	16:10:39	75.931
07/23/02	16:11:39	75.505
07/23/02	16:12:39	76.301
07/23/02	16:13:39	77.780
07/23/02	16:14:39	76.870
07/23/02	16:15:39	75.021
07/23/02	16:16:39	76.017
07/23/02	16:17:39	76.131
07/23/02	16:18:39	77.268
07/23/02	16:19:39	76.671
07/23/02	16:20:39	76.927
07/23/02	16:21:39	75.931
07/23/02	16:22:39	52.043
07/23/02	16:23:39	78.918
07/23/02	16:24:39	76.557
07/23/02	16:25:39	76.614
07/23/02	16:26:39	76.358
07/23/02	16:27:39	76.842
07/23/02	16:28:39	78.207
07/23/02	16:29:39	76.870
07/23/02	16:30:39	77.297
07/23/02	16:31:39	75.448
07/23/02	16:32:39	76.785
07/23/02	16:33:39	76.415
07/23/02	16:34:39	78.377
07/23/02	16:35:39	76.927
07/23/02	16:36:39	78.377
07/23/02	16:37:39	76.842
07/23/02	16:38:39	77.723
07/23/02	16:39:39	76.927
07/23/02	16:40:39	53.180
07/23/02	16:41:39	60.546
07/23/02	16:42:39	61.086
07/23/02	16:43:39	60.546
07/23/02	16:44:39	58.783
07/23/02	16:45:39	59.465
07/23/02	16:46:39	74.424
07/23/02	16:47:39	79.031
07/23/02	16:48:39	73.742
07/23/02	16:49:39	74.367
07/23/02	16:50:39	74.055
07/23/02	16:51:39	76.244
07/23/02	16:52:39	74.481
07/23/02	16:53:39	74.225
07/23/02	16:54:39	72.490
07/23/02	16:55:39	73.827
07/23/02	16:56:39	74.652
07/23/02	16:57:39	73.799
07/23/02	16:58:39	73.884
07/23/02	16:59:39	73.884
07/23/02	17:00:39	73.372
07/23/02	17:01:39	74.424
07/23/02	17:02:39	74.652
07/23/02	17:03:39	74.680
07/23/02	17:04:39	74.254
07/23/02	17:05:39	71.324
07/23/02	17:06:39	73.941
07/23/02	17:07:39	72.889
07/23/02	17:08:39	80.880
07/23/02	17:09:39	77.097
07/23/02	17:10:39	76.870
07/23/02	17:11:39	76.415
07/23/02	17:12:39	75.761
07/23/02	17:13:39	75.818
07/23/02	17:14:39	74.310
07/23/02	17:15:39	75.761
07/23/02	17:16:39	75.875
07/23/02	17:17:39	75.818
07/23/02	17:18:39	75.875
07/23/02	17:19:39	75.818
07/23/02	17:20:39	76.358
07/23/02	17:21:39	72.661
07/23/02	17:22:39	77.524
07/23/02	17:23:39	76.842
07/23/02	17:24:39	77.211
07/23/02	17:25:39	75.562
07/23/02	17:26:39	75.391
07/23/02	17:27:39	74.965
07/23/02	17:28:39	73.742
07/23/02	17:29:39	76.131
07/23/02	17:30:39	75.818
07/23/02	17:31:39	74.794
07/23/02	17:32:39	74.055
07/23/02	17:33:39	75.277
07/23/02	17:34:39	74.680
07/23/02	17:35:39	73.998
07/23/02	17:36:39	77.297
07/23/02	17:37:39	75.590
07/23/02	17:38:39	74.851
07/23/02	17:39:39	76.244
07/23/02	17:40:39	73.514
07/23/02	17:41:39	75.391
07/23/02	17:42:39	75.021
07/23/02	17:43:39	74.481
07/23/02	17:44:39	76.785
07/23/02	17:45:39	76.074
07/23/02	17:46:39	75.164
07/23/02	17:47:39	76.927
07/23/02	17:48:39	76.671
07/23/02	17:49:39	75.590
07/23/02	17:50:39	75.988
07/23/02	17:51:39	76.301
07/23/02	17:52:39	75.988
07/23/02	17:53:39	73.571
07/23/02	17:54:39	76.017
07/23/02	17:55:39	75.704
07/23/02	17:56:39	75.107
07/23/02	17:57:39	75.647
07/23/02	17:58:39	75.391
07/23/02	17:59:39	75.590
07/23/02	18:00:39	75.221
07/23/02	18:01:39	75.221
07/23/02	18:02:39	75.818
07/23/02	18:03:39	76.984
07/23/02	18:04:39	75.647
07/23/02	18:05:39	74.851
07/23/02	18:06:39	75.761
07/23/02	18:07:39	75.704
07/23/02	18:08:39	76.443
07/23/02	18:09:39	74.538
07/23/02	18:10:39	75.988
07/23/02	18:11:39	75.704
07/23/02	18:12:39	75.761
07/23/02	18:13:39	73.884
07/23/02	18:14:39	75.875
07/23/02	18:15:39	76.671
07/23/02	18:16:39	73.514
07/23/02	18:17:39	77.097
07/23/02	18:18:39	75.988
07/23/02	18:19:39	74.424
07/23/02	18:20:39	74.965
07/23/02	18:21:39	74.794
07/23/02	18:22:39	73.884
07/23/02	18:23:39	73.884
07/23/02	18:24:39	74.424
07/23/02	18:25:39	75.505
07/23/02	18:26:39	76.301
07/23/02	18:27:39	74.737
07/23/02	18:28:39	76.301
07/23/02	18:29:39	75.590
07/23/02	18:30:39	74.367
07/23/02	18:31:39	75.931
07/23/02	18:32:39	75.448
07/23/02	18:33:39	74.737
07/23/02	18:34:39	73.201
07/23/02	18:35:39	76.358
07/23/02	18:36:39	75.334
07/23/02	18:37:39	76.927
07/23/02	18:38:39	75.078
07/23/02	18:39:39	76.244
07/23/02	18:40:39	76.557
07/23/02	18:41:39	75.590
07/23/02	18:42:39	76.728
07/23/02	18:43:39	75.590
07/23/02	18:44:39	76.842
07/23/02	18:45:39	75.931
07/23/02	18:46:39	74.851
07/23/02	18:47:39	76.671
07/23/02	18:48:39	75.931
07/23/02	18:49:39	76.244
07/23/02	18:50:39	74.652
07/23/02	18:51:39	76.500
07/23/02	18:52:39	76.131
07/23/02	18:53:39	76.244
07/23/02	18:54:39	74.908
07/23/02	18:55:39	74.652
07/23/02	18:56:39	74.965
07/23/02	18:57:39	75.590
07/23/02	18:58:39	74.310
07/23/02	18:59:39	74.254
07/23/02	19:00:39	75.021
07/23/02	19:01:39	75.391
07/23/02	19:02:39	75.647
07/23/02	19:03:39	75.704
07/23/02	19:04:39	76.870

DIXON AND BELVIN - NO. 7550 cont.

Date	Time	Pres (PSI)
07/23/02	19:05:39	76.301
07/23/02	19:06:39	75.761
07/23/02	19:07:39	75.164
07/23/02	19:08:39	75.875
07/23/02	19:09:39	76.984
07/23/02	19:10:39	76.984
07/23/02	19:11:39	75.221
07/23/02	19:12:39	75.818
07/23/02	19:13:39	75.021
07/23/02	19:14:39	74.538
07/23/02	19:15:39	74.481
07/23/02	19:16:39	75.448
07/23/02	19:17:39	76.728
07/23/02	19:18:39	75.505
07/23/02	19:19:39	75.988
07/23/02	19:20:39	76.557
07/23/02	19:21:39	75.164
07/23/02	19:22:39	75.704
07/23/02	19:23:39	74.595
07/23/02	19:24:39	77.297
07/23/02	19:25:39	75.164
07/23/02	19:26:39	75.164
07/23/02	19:27:39	76.415
07/23/02	19:28:39	76.131
07/23/02	19:29:39	74.111
07/23/02	19:30:39	76.187
07/23/02	19:31:39	75.334
07/23/02	19:32:39	74.851
07/23/02	19:33:39	74.538
07/23/02	19:34:39	75.334
07/23/02	19:35:39	75.164
07/23/02	19:36:39	76.017
07/23/02	19:37:39	76.017
07/23/02	19:38:39	75.334
07/23/02	19:39:39	75.505
07/23/02	19:40:39	75.107
07/23/02	19:41:39	75.647
07/23/02	19:42:39	75.021
07/23/02	19:43:39	75.505
07/23/02	19:44:39	76.614
07/23/02	19:45:39	75.647
07/23/02	19:46:39	74.424
07/23/02	19:47:39	75.277
07/23/02	19:48:39	75.391
07/23/02	19:49:39	73.884
07/23/02	19:50:39	75.562
07/23/02	19:51:39	75.164
07/23/02	19:52:39	75.562
07/23/02	19:53:39	75.334
07/23/02	19:54:39	75.448
07/23/02	19:55:39	75.505
07/23/02	19:56:39	75.875
07/23/02	19:57:39	74.367
07/23/02	19:58:39	75.391
07/23/02	19:59:39	75.164
07/23/02	20:00:39	76.074
07/23/02	20:01:39	75.875
07/23/02	20:02:39	76.671
07/23/02	20:03:39	76.557
07/23/02	20:04:39	74.652
07/23/02	20:05:39	75.221
07/23/02	20:06:39	73.884
07/23/02	20:07:39	75.021
07/23/02	20:08:39	75.021
07/23/02	20:09:39	75.704
07/23/02	20:10:39	74.652
07/23/02	20:11:39	73.742
07/23/02	20:12:39	75.562
07/23/02	20:13:39	73.258
07/23/02	20:14:39	75.107
07/23/02	20:15:39	73.742
07/23/02	20:16:39	74.481
07/23/02	20:17:39	74.794
07/23/02	20:18:39	75.590
07/23/02	20:19:39	76.301
07/23/02	20:20:39	75.078
07/23/02	20:21:39	74.851
07/23/02	20:22:39	72.974
07/23/02	20:23:39	74.965
07/23/02	20:24:39	74.367
07/23/02	20:25:39	74.367
07/23/02	20:26:39	75.078
07/23/02	20:27:39	74.965
07/23/02	20:28:39	76.074
07/23/02	20:29:39	75.761
07/23/02	20:30:39	74.538
07/23/02	20:31:39	75.021
07/23/02	20:32:39	74.310
07/23/02	20:33:39	74.652
07/23/02	20:34:39	74.965
07/23/02	20:35:39	74.965
07/23/02	20:36:39	75.391
07/23/02	20:37:39	75.590
07/23/02	20:38:39	76.785
07/23/02	20:39:39	76.074
07/23/02	20:40:39	75.818
07/23/02	20:41:39	76.131
07/23/02	20:42:39	75.875
07/23/02	20:43:39	76.415
07/23/02	20:44:39	76.017
07/23/02	20:45:39	76.671
07/23/02	20:46:39	75.931
07/23/02	20:47:39	74.168
07/23/02	20:48:39	75.818
07/23/02	20:49:39	75.021
07/23/02	20:50:39	75.021
07/23/02	20:51:39	75.875
07/23/02	20:52:39	76.131
07/23/02	20:53:39	76.074
07/23/02	20:54:39	75.277
07/23/02	20:55:39	76.074
07/23/02	20:56:39	75.590
07/23/02	20:57:39	75.164
07/23/02	20:58:39	73.941
07/23/02	20:59:39	74.908
07/23/02	21:00:39	73.031
07/23/02	21:01:39	73.685
07/23/02	21:02:39	74.652
07/23/02	21:03:39	74.225
07/23/02	21:04:39	74.481
07/23/02	21:05:39	74.538
07/23/02	21:06:39	74.310
07/23/02	21:07:39	74.254
07/23/02	21:08:39	75.021
07/23/02	21:09:39	73.144
07/23/02	21:10:39	74.851
07/23/02	21:11:39	74.481
07/23/02	21:12:39	75.164
07/23/02	21:13:39	73.884
07/23/02	21:14:39	74.168
07/23/02	21:15:39	74.595
07/23/02	21:16:39	74.055
07/23/02	21:17:39	74.424
07/23/02	21:18:39	76.301
07/23/02	21:19:39	75.107
07/23/02	21:20:39	74.851
07/23/02	21:21:39	75.334
07/23/02	21:22:39	74.424
07/23/02	21:23:39	74.538
07/23/02	21:24:39	75.021
07/23/02	21:25:39	74.737
07/23/02	21:26:39	74.965
07/23/02	21:27:39	75.277
07/23/02	21:28:39	74.424
07/23/02	21:29:39	75.078
07/23/02	21:30:39	75.277
07/23/02	21:31:39	75.562
07/23/02	21:32:39	74.595
07/23/02	21:33:39	75.505
07/23/02	21:34:39	75.334
07/23/02	21:35:39	75.647
07/23/02	21:36:39	75.107
07/23/02	21:37:39	75.647
07/23/02	21:38:39	75.107
07/23/02	21:39:39	75.647
07/23/02	21:40:39	74.908
07/23/02	21:41:39	76.301
07/23/02	21:42:39	75.107
07/23/02	21:43:39	75.391
07/23/02	21:44:39	76.557
07/23/02	21:45:39	69.874
07/23/02	21:46:39	53.721
07/23/02	21:47:39	55.996
07/23/02	21:48:39	55.512
07/23/02	21:49:39	55.740
07/23/02	21:50:39	55.512
07/23/02	21:51:39	54.460
07/23/02	21:52:39	55.086
07/23/02	21:53:39	53.977
07/23/02	21:54:39	54.403
07/23/02	21:55:39	53.749
07/23/02	21:56:39	66.632
07/23/02	21:57:39	73.144
07/23/02	21:58:39	73.514
07/23/02	21:59:39	72.661
07/23/02	22:00:39	71.922
07/23/02	22:01:39	72.121
07/23/02	22:02:39	71.922
07/23/02	22:03:39	72.064
07/23/02	22:04:39	72.348
07/23/02	22:05:39	71.979
07/23/02	22:06:39	72.291
07/23/02	22:07:39	73.457
07/23/02	22:08:39	73.685
07/23/02	22:09:39	74.680
07/23/02	22:10:39	72.291
07/23/02	22:11:39	72.547
07/23/02	22:12:39	72.604
07/23/02	22:13:39	72.035
07/23/02	22:14:39	72.974
07/23/02	22:15:39	73.315
07/23/02	22:16:39	73.514
07/23/02	22:17:39	72.718
07/23/02	22:18:39	83.667
07/23/02	22:19:39	74.794
07/23/02	22:20:39	76.870
07/23/02	22:21:39	76.614
07/23/02	22:22:39	76.017
07/23/02	22:23:39	77.097
07/23/02	22:24:39	76.301
07/23/02	22:25:39	76.557
07/23/02	22:26:39	76.074
07/23/02	22:27:39	76.443
07/23/02	22:28:39	76.187
07/23/02	22:29:39	75.818
07/23/02	22:30:39	76.557
07/23/02	22:31:39	76.870
07/23/02	22:32:39	76.614
07/23/02	22:33:39	76.500
07/23/02	22:34:39	75.988
07/23/02	22:35:39	77.041
07/23/02	22:36:39	77.041
07/23/02	22:37:39	75.704
07/23/02	22:38:39	77.268
07/23/02	22:39:39	76.017
07/23/02	22:40:39	76.358
07/23/02	22:41:39	78.320
07/23/02	22:42:39	77.097
07/23/02	22:43:39	77.780
07/23/02	22:44:39	78.605
07/23/02	22:45:39	76.187
07/23/02	22:46:39	77.297
07/23/02	22:47:39	77.268
07/23/02	22:48:39	78.008
07/23/02	22:49:39	78.263
07/23/02	22:50:39	77.780
07/23/02	22:51:39	78.207
07/23/02	22:52:39	78.263
07/23/02	22:53:39	78.804
07/23/02	22:54:39	77.951
07/23/02	22:55:39	78.633
07/23/02	22:56:39	77.410
07/23/02	22:57:39	77.638
07/23/02	22:58:39	77.951
07/23/02	22:59:39	78.377
07/23/02	23:00:39	77.297
07/23/02	23:01:39	76.728
07/23/02	23:02:39	76.842
07/23/02	23:03:39	78.008
07/23/02	23:04:39	78.690
07/23/02	23:05:39	77.951
07/23/02	23:06:39	77.211
07/23/02	23:07:39	78.320
07/23/02	23:08:39	78.263
07/23/02	23:09:39	77.353
07/23/02	23:10:39	78.377
07/23/02	23:11:39	77.097
07/23/02	23:12:39	77.951
07/23/02	23:13:39	77.097
07/23/02	23:14:39	78.974
07/23/02	23:15:39	77.951
07/23/02	23:16:39	78.320
07/23/02	23:17:39	78.320
07/23/02	23:18:39	77.695
07/23/02	23:19:39	77.211
07/23/02	23:20:39	77.638
07/23/02	23:21:39	78.633
07/23/02	23:22:39	78.605
07/23/02	23:23:39	78.064
07/23/02	23:24:39	78.377
07/23/02	23:25:39	79.117
07/23/02	23:26:39	79.117
07/23/02	23:27:39	79.174
07/23/02	23:28:39	79.174

DIXON AND BELVIN - NO. 7550 cont.

Date	Time	Pres (PSI)
07/24/02	08:17:39	75.448
07/24/02	08:18:39	76.187
07/24/02	08:19:39	76.927
07/24/02	08:20:39	76.244
07/24/02	08:21:39	59.949
07/24/02	08:22:39	64.869
07/24/02	08:23:39	63.333
07/24/02	08:24:39	60.546
07/24/02	08:25:39	61.655
07/24/02	08:26:39	59.835
07/24/02	08:27:39	74.737
07/24/02	08:28:39	78.434
07/24/02	08:29:39	73.827
07/24/02	08:30:39	75.647
07/24/02	08:31:39	75.391
07/24/02	08:32:39	75.334
07/24/02	08:33:39	75.988
07/24/02	08:34:39	74.965
07/24/02	08:35:39	74.908
07/24/02	08:36:39	74.652
07/24/02	08:37:39	73.628
07/24/02	08:38:39	74.310
07/24/02	08:39:39	74.225
07/24/02	08:40:39	76.301
07/24/02	08:41:39	75.107
07/24/02	08:42:39	75.107
07/24/02	08:43:39	75.988
07/24/02	08:44:39	71.979
07/24/02	08:45:39	72.121
07/24/02	08:46:39	72.405
07/24/02	08:47:39	71.922
07/24/02	08:48:39	72.405
07/24/02	08:49:39	71.552
07/24/02	08:50:39	72.490
07/24/02	08:51:39	69.362
07/24/02	08:52:39	71.381
07/24/02	08:53:39	70.699
07/24/02	08:54:39	71.609
07/24/02	08:55:39	72.490
07/24/02	08:56:39	73.628
07/24/02	08:57:39	75.391
07/24/02	08:58:39	73.514
07/24/02	08:59:39	73.884
07/24/02	09:00:39	81.847
07/24/02	09:01:39	77.041
07/24/02	09:02:39	74.310
07/24/02	09:03:39	77.097
07/24/02	09:04:39	75.391
07/24/02	09:05:39	75.761
07/24/02	09:06:39	77.154
07/24/02	09:07:39	77.097
07/24/02	09:08:39	76.927
07/24/02	09:09:39	77.211
07/24/02	09:10:39	76.500
07/24/02	09:11:39	75.448
07/24/02	09:12:39	75.391
07/24/02	09:13:39	76.500
07/24/02	09:14:39	74.737
07/24/02	09:15:39	75.875
07/24/02	09:16:39	76.614
07/24/02	09:17:39	73.628
07/24/02	09:18:39	64.613
07/24/02	09:19:39	66.319
07/24/02	09:20:39	68.338
07/24/02	09:21:39	66.461
07/24/02	09:22:39	67.229
07/24/02	09:23:39	66.689
07/24/02	09:24:39	66.803
07/24/02	09:25:39	65.978
07/24/02	09:26:39	64.073
07/24/02	09:27:39	64.129
07/24/02	09:28:39	64.556
07/24/02	09:29:39	64.556
07/24/02	09:30:39	64.641
07/24/02	09:31:39	66.205
07/24/02	09:32:39	67.485
07/24/02	09:33:39	66.746
07/24/02	09:34:39	66.518
07/24/02	09:35:39	67.002
07/24/02	09:36:39	67.485
07/24/02	09:37:39	67.229
07/24/02	09:38:39	64.698
07/24/02	09:39:39	67.315
07/24/02	09:40:39	67.798
07/24/02	09:41:39	81.676
07/24/02	09:42:39	74.111
07/24/02	09:43:39	75.107
07/24/02	09:44:39	75.334
07/24/02	09:45:39	74.111
07/24/02	09:46:39	75.562
07/24/02	09:47:39	76.927
07/24/02	09:48:39	76.017
07/24/02	09:49:39	75.761
07/24/02	09:50:39	76.187
07/24/02	09:51:39	75.931
07/24/02	09:52:39	76.131
07/24/02	09:53:39	74.652
07/24/02	09:54:39	76.842
07/24/02	09:55:39	75.875
07/24/02	09:56:39	75.505
07/24/02	09:57:39	75.704
07/24/02	09:58:39	76.358
07/24/02	09:59:39	75.505
07/24/02	10:00:39	74.652
07/24/02	10:01:39	73.258
07/24/02	10:02:39	75.988
07/24/02	10:03:39	65.978
07/24/02	10:04:39	55.200
07/24/02	10:05:39	55.683
07/24/02	10:06:39	54.233
07/24/02	10:07:39	55.313
07/24/02	10:08:39	56.906
07/24/02	10:09:39	57.077
07/24/02	10:10:39	57.446
07/24/02	10:11:39	58.356
07/24/02	10:12:39	56.849
07/24/02	10:13:39	56.792
07/24/02	10:14:39	54.147
07/24/02	10:15:39	55.257
07/24/02	10:16:39	54.147
07/24/02	10:17:39	54.147
07/24/02	10:18:39	53.493
07/24/02	10:19:39	53.436
07/24/02	10:20:39	54.034
07/24/02	10:21:39	64.442
07/24/02	10:22:39	77.837
07/24/02	10:23:39	76.131
07/24/02	10:24:39	74.652
07/24/02	10:25:39	74.310
07/24/02	10:26:39	75.704
07/24/02	10:27:39	75.107
07/24/02	10:28:39	74.680
07/24/02	10:29:39	75.704
07/24/02	10:30:39	75.107
07/24/02	10:31:39	73.941
07/24/02	10:32:39	74.908
07/24/02	10:33:39	74.851
07/24/02	10:34:39	73.628
07/24/02	10:35:39	73.742
07/24/02	10:36:39	74.254
07/24/02	10:37:39	74.424
07/24/02	10:38:39	72.547
07/24/02	10:39:39	74.168
07/24/02	10:40:39	73.799
07/24/02	10:41:39	74.908
07/24/02	10:42:39	72.490
07/24/02	10:43:39	74.737
07/24/02	10:44:39	74.794
07/24/02	10:45:39	75.078
07/24/02	10:46:39	74.481
07/24/02	10:47:39	74.737
07/24/02	10:48:39	74.908
07/24/02	10:49:39	72.604
07/24/02	10:50:39	74.367
07/24/02	10:51:39	69.931
07/24/02	10:52:39	73.144
07/24/02	10:53:39	71.125
07/24/02	10:54:39	73.088
07/24/02	10:55:39	70.585
07/24/02	10:56:39	75.590
07/24/02	10:57:39	75.107
07/24/02	10:58:39	61.286
07/24/02	10:59:39	38.535
07/24/02	11:00:39	41.862
07/24/02	11:01:39	34.809
07/24/02	11:02:39	34.013
07/24/02	11:03:39	33.245
07/24/02	11:04:39	34.752
07/24/02	11:05:39	34.638
07/24/02	11:06:39	34.695
07/24/02	11:07:39	34.212
07/24/02	11:08:39	33.899
07/24/02	11:09:39	33.728
07/24/02	11:10:39	33.416
07/24/02	11:11:39	32.932
07/24/02	11:12:39	32.676
07/24/02	11:13:39	32.761
07/24/02	11:14:39	32.506
07/24/02	11:15:39	32.306
07/24/02	11:16:39	32.306
07/24/02	11:17:39	32.449
07/24/02	11:18:39	33.103
07/24/02	11:19:39	33.728
07/24/02	11:20:39	36.686
07/24/02	11:21:39	39.729
07/24/02	11:22:39	43.085
07/24/02	11:23:39	46.185
07/24/02	11:24:39	49.427
07/24/02	11:25:39	60.546
07/24/02	11:26:39	67.315
07/24/02	11:27:39	74.652
07/24/02	11:28:39	73.088
07/24/02	11:29:39	73.201
07/24/02	11:30:39	71.865
07/24/02	11:31:39	-1.422
07/24/02	11:32:39	-1.422
07/24/02	11:33:39	-1.365
07/24/02	11:34:39	-1.422
07/24/02	11:35:39	-1.422
07/24/02	11:36:39	-1.422
07/24/02	11:37:39	-1.422
07/24/02	11:38:39	-1.365
07/24/02	11:39:39	-1.422
07/24/02	11:40:39	-1.422
07/24/02	11:41:39	-1.422
07/24/02	11:42:39	-1.479
07/24/02	11:43:39	-1.422
07/24/02	11:44:39	-1.422
07/24/02	11:45:39	-1.422
07/24/02	11:46:39	-1.422
07/24/02	11:47:39	-1.422
07/24/02	11:48:39	-1.365
07/24/02	11:49:39	-1.365
07/24/02	11:50:39	-1.422
07/24/02	11:51:39	-1.365
07/24/02	11:52:39	-1.365
07/24/02	11:53:39	-1.365
07/24/02	11:54:39	-1.422
07/24/02	11:55:39	-1.365
07/24/02	11:56:39	-1.422
07/24/02	11:57:39	-1.422
07/24/02	11:58:39	-1.422
07/24/02	11:59:39	-1.365
07/24/02	12:00:39	-1.365
07/24/02	12:01:39	-1.365
07/24/02	12:02:39	-1.365
07/24/02	12:03:39	-1.422
07/24/02	12:04:39	-1.365
07/24/02	12:05:39	-1.365
07/24/02	12:06:39	-1.365
07/24/02	12:07:39	-1.365
07/24/02	12:08:39	-1.422
07/24/02	12:09:39	-1.365
07/24/02	12:10:39	-1.365
07/24/02	12:11:39	-1.365
07/24/02	12:12:39	-1.365
07/24/02	12:13:39	-1.422
07/24/02	12:14:39	-1.365
07/24/02	12:15:39	-1.422
07/24/02	12:16:39	-1.365
07/24/02	12:17:39	-1.365
07/24/02	12:18:39	-1.365
07/24/02	12:19:39	-1.422
07/24/02	12:20:39	-1.365
07/24/02	12:21:39	-1.365
07/24/02	12:22:39	-1.365
07/24/02	12:23:39	-1.365
07/24/02	12:24:39	-1.422
07/24/02	12:25:39	-1.365
07/24/02	12:26:39	-1.365
07/24/02	12:27:39	-1.422
07/24/02	12:28:39	-1.365
07/24/02	12:29:39	-1.365
07/24/02	12:30:39	-1.308
07/24/02	12:31:39	-1.365
07/24/02	12:32:39	-1.365
07/24/02	12:33:39	-1.365
07/24/02	12:34:39	-1.365
07/24/02	12:35:39	-1.365
07/24/02	12:36:39	-1.422
07/24/02	12:37:39	-1.365
07/24/02	12:38:39	-1.365
07/24/02	12:39:39	-1.422
07/24/02	12:40:39	-1.365

DIXON AND BELVIN - NO. 7550 cont.

Date	Time	Pres (PSI)
07/24/02	12:41:39	-1.365
07/24/02	12:42:39	-1.308
07/24/02	12:43:39	-1.365
07/24/02	12:44:39	-1.308
07/24/02	12:45:39	-1.365
07/24/02	12:46:39	-1.308
07/24/02	12:47:39	-1.308
07/24/02	12:48:39	-1.308
07/24/02	12:49:39	-1.365
07/24/02	12:50:39	-1.308
07/24/02	12:51:39	-1.365
07/24/02	12:52:39	-1.308
07/24/02	12:53:39	-1.308
07/24/02	12:54:39	-1.365
07/24/02	12:55:39	-1.365
07/24/02	12:56:39	-1.308
07/24/02	12:57:39	-1.308
07/24/02	12:58:39	-1.308
07/24/02	12:59:39	-1.365
07/24/02	13:00:39	-1.365
07/24/02	13:01:39	-1.308
07/24/02	13:02:39	-1.365
07/24/02	13:03:39	-1.365
07/24/02	13:04:39	-1.308
07/24/02	13:05:39	-1.365
07/24/02	13:06:39	-1.365
07/24/02	13:07:39	-1.365
07/24/02	13:08:39	-1.308
07/24/02	13:09:39	-1.365
07/24/02	13:10:39	-1.365
07/24/02	13:11:39	-1.365
07/24/02	13:12:39	-1.365
07/24/02	13:13:39	-1.308
07/24/02	13:14:39	-1.365
07/24/02	13:15:39	-1.365
07/24/02	13:16:39	-1.308
07/24/02	13:17:39	-1.308
07/24/02	13:18:39	-1.365
07/24/02	13:19:39	-1.365
07/24/02	13:20:39	-1.365
07/24/02	13:21:39	-1.365
07/24/02	13:22:39	-1.365
07/24/02	13:23:39	-1.365
07/24/02	13:24:39	-1.365
07/24/02	13:25:39	-1.365
07/24/02	13:26:39	-1.365
07/24/02	13:27:39	-1.365
07/24/02	13:28:39	-1.308
07/24/02	13:29:39	-1.308
07/24/02	13:30:39	-1.308
07/24/02	13:31:39	-1.308
07/24/02	13:32:39	-1.308
07/24/02	13:33:39	-1.308
07/24/02	13:34:39	-1.365
07/24/02	13:35:39	-1.308
07/24/02	13:36:39	-1.365
07/24/02	13:37:39	-1.308
07/24/02	13:38:39	-1.308
07/24/02	13:39:39	-1.308
07/24/02	13:40:39	-1.308
07/24/02	13:41:39	-1.308
07/24/02	13:42:39	-1.308
07/24/02	13:43:39	-1.365
07/24/02	13:44:39	-1.308
07/24/02	13:45:39	-1.308
07/24/02	13:46:39	-1.308
07/24/02	13:47:39	-1.308
07/24/02	13:48:39	-1.308
07/24/02	13:49:39	-1.308
07/24/02	13:50:39	-1.308
07/24/02	13:51:39	-1.308
07/24/02	13:52:39	-1.308
07/24/02	13:53:39	-1.308
07/24/02	13:54:39	-1.308
07/24/02	13:55:39	-1.308
07/24/02	13:56:39	-1.308
07/24/02	13:57:39	-1.308
07/24/02	13:58:39	-1.308
07/24/02	13:59:39	-1.308
07/24/02	14:00:39	-1.280
07/24/02	14:01:39	-1.308
07/24/02	14:02:39	-1.365
07/24/02	14:03:39	-1.365
07/24/02	14:04:39	-1.308
07/24/02	14:05:39	-1.308
07/24/02	14:06:39	-1.308
07/24/02	14:07:39	-1.365
07/24/02	14:08:39	-1.308
07/24/02	14:09:39	-1.308
07/24/02	14:10:39	-1.308
07/24/02	14:11:39	-1.280
07/24/02	14:12:39	-1.308
07/24/02	14:13:39	-1.308
07/24/02	14:14:39	-1.308
07/24/02	14:15:39	-1.308
07/24/02	14:16:39	-1.308
07/24/02	14:17:39	-1.308
07/24/02	14:18:39	-1.280
07/24/02	14:19:39	-1.308
07/24/02	14:20:39	-1.280
07/24/02	14:21:39	-1.308
07/24/02	14:22:39	-1.308
07/24/02	14:23:39	-1.308
07/24/02	14:24:39	-1.308
07/24/02	14:25:39	-1.280
07/24/02	14:26:39	-1.308
07/24/02	14:27:39	-1.280
07/24/02	14:28:39	-1.308
07/24/02	14:29:39	-1.308
07/24/02	14:30:39	-1.308
07/24/02	14:31:39	-1.308
07/24/02	14:32:39	-1.308
07/24/02	14:33:39	-1.365
07/24/02	14:34:39	-1.365
07/24/02	14:35:39	-1.365
07/24/02	14:36:39	-1.365
07/24/02	14:37:39	-1.365
07/24/02	14:38:39	-1.422
07/24/02	14:39:39	-1.365
07/24/02	14:40:39	-1.365
07/24/02	14:41:39	-1.365
07/24/02	14:42:39	-1.365
07/24/02	14:43:39	-1.365
07/24/02	14:44:39	-1.422
07/24/02	14:45:39	-1.365
07/24/02	14:46:39	-1.365
07/24/02	14:47:39	-1.422
07/24/02	14:48:39	-1.422
07/24/02	14:49:39	-1.422
07/24/02	14:50:39	-1.422
07/24/02	14:51:39	-1.422
07/24/02	14:52:39	-1.422
07/24/02	14:53:39	-1.365
07/24/02	14:54:39	-1.365
07/24/02	14:55:39	-1.422
07/24/02	14:56:39	-1.365
07/24/02	14:57:39	-1.365
07/24/02	14:58:39	-1.365
07/24/02	14:59:39	-1.365
07/24/02	15:00:39	-1.308
07/24/02	15:01:39	-1.365
07/24/02	15:02:39	-1.365
07/24/02	15:03:39	-1.365
07/24/02	15:04:39	-1.308
07/24/02	15:05:39	-1.308
07/24/02	15:06:39	-1.308
07/24/02	15:07:39	-1.280
07/24/02	15:08:39	-1.308
07/24/02	15:09:39	-1.308
07/24/02	15:10:39	-1.308
07/24/02	15:11:39	-1.308
07/24/02	15:12:39	-1.308
07/24/02	15:13:39	-1.308
07/24/02	15:14:39	-1.308
07/24/02	15:15:39	-1.308
07/24/02	15:16:39	-1.308
07/24/02	15:17:39	-1.280
07/24/02	15:18:39	-1.280
07/24/02	15:19:39	-1.280
07/24/02	15:20:39	-1.308
07/24/02	15:21:39	-1.308
07/24/02	15:22:39	-1.280
07/24/02	15:23:39	-1.308
07/24/02	15:24:39	-1.308
07/24/02	15:25:39	-1.308
07/24/02	15:26:39	-1.308
07/24/02	15:27:39	-1.280
07/24/02	15:28:39	-1.308
07/24/02	15:29:39	-1.280
07/24/02	15:30:39	-1.308
07/24/02	15:31:39	-1.308
07/24/02	15:32:39	-1.308
07/24/02	15:33:39	-1.308
07/24/02	15:34:39	-1.280
07/24/02	15:35:39	-1.280
07/24/02	15:36:39	-1.365
07/24/02	15:37:39	-1.365
07/24/02	15:38:39	-1.365
07/24/02	15:39:39	-1.308
07/24/02	15:40:39	-1.308
07/24/02	15:41:39	-1.365
07/24/02	15:42:39	-1.365
07/24/02	15:43:39	-1.365
07/24/02	15:44:39	-1.365
07/24/02	15:45:39	-1.365
07/24/02	15:46:39	-1.365
07/24/02	15:47:39	-1.365
07/24/02	15:48:39	-1.308
07/24/02	15:49:39	-1.365
07/24/02	15:50:39	-1.308
07/24/02	15:51:39	-1.365
07/24/02	15:52:39	-1.308
07/24/02	15:53:39	-1.365
07/24/02	15:54:39	-1.365
07/24/02	15:55:39	-1.308
07/24/02	15:56:39	-1.365
07/24/02	15:57:39	-1.308
07/24/02	15:58:39	-1.365
07/24/02	15:59:39	-1.308
07/24/02	16:00:39	-1.308
07/24/02	16:01:39	-1.365
07/24/02	16:02:39	-1.365
07/24/02	16:03:39	-1.365
07/24/02	16:04:39	-1.365
07/24/02	16:05:39	-1.365
07/24/02	16:06:39	-1.308
07/24/02	16:07:39	-1.365
07/24/02	16:08:39	-1.365
07/24/02	16:09:39	-1.365
07/24/02	16:10:39	-1.308
07/24/02	16:11:39	-1.308
07/24/02	16:12:39	-1.308
07/24/02	16:13:39	-1.308
07/24/02	16:14:39	-1.308
07/24/02	16:15:39	-1.308
07/24/02	16:16:39	-1.308
07/24/02	16:17:39	-1.308
07/24/02	16:18:39	-1.280
07/24/02	16:19:39	-1.308
07/24/02	16:20:39	-1.308
07/24/02	16:21:39	-1.308
07/24/02	16:22:39	-1.308
07/24/02	16:23:39	-1.308
07/24/02	16:24:39	-1.365
07/24/02	16:25:39	-1.308
07/24/02	16:26:39	-0.427
07/24/02	16:27:39	-0.512

GIRARD AND EARLE - NO. 7552

Date	Time	Pres (PSI)
07/22/02	07:53:03	0.085
07/22/02	07:54:03	0.085
07/22/02	07:55:03	0.085
07/22/02	07:56:03	0.085
07/22/02	07:57:03	0.085
07/22/02	07:58:03	0.085
07/22/02	07:59:03	0.028
07/22/02	08:00:03	0.028
07/22/02	08:01:03	0.085
07/22/02	08:02:03	0.085
07/22/02	08:03:03	0.085
07/22/02	08:04:03	0.085
07/22/02	08:05:03	0.085
07/22/02	08:06:03	0.028
07/22/02	08:07:03	0.085
07/22/02	08:08:03	0.085
07/22/02	08:09:03	0.085
07/22/02	08:10:03	0.085
07/22/02	08:11:03	0.085
07/22/02	08:12:03	0.085
07/22/02	08:13:03	0.085
07/22/02	08:14:03	0.085
07/22/02	08:15:03	0.085
07/22/02	08:16:03	0.085
07/22/02	08:17:03	0.028
07/22/02	08:18:03	0.085
07/22/02	08:19:03	0.028
07/22/02	08:20:03	0.028
07/22/02	08:21:03	0.085
07/22/02	08:22:03	0.028
07/22/02	08:23:03	0.085
07/22/02	08:24:03	0.085
07/22/02	08:25:03	0.085
07/22/02	08:26:03	0.142
07/22/02	08:27:03	0.085
07/22/02	08:28:03	0.085
07/22/02	08:29:03	0.085
07/22/02	08:30:03	0.085
07/22/02	08:31:03	0.085
07/22/02	08:32:03	0.028
07/22/02	08:33:03	0.085
07/22/02	08:34:03	0.085
07/22/02	08:35:03	0.085
07/22/02	08:36:03	0.085
07/22/02	08:37:03	0.085
07/22/02	08:38:03	0.142
07/22/02	08:39:03	0.085
07/22/02	08:40:03	0.085
07/22/02	08:41:03	0.085
07/22/02	08:42:03	0.085
07/22/02	08:43:03	0.085
07/22/02	08:44:03	0.085
07/22/02	08:45:03	0.028
07/22/02	08:46:03	0.028
07/22/02	08:47:03	0.028
07/22/02	08:48:03	0.028
07/22/02	08:49:03	0.028
07/22/02	08:50:03	0.028
07/22/02	08:51:03	0.028
07/22/02	08:52:03	0.028
07/22/02	08:53:03	0.028
07/22/02	08:54:03	0.028
07/22/02	08:55:03	0.028
07/22/02	08:56:03	0.000
07/22/02	08:57:03	0.000
07/22/02	08:58:03	0.000
07/22/02	08:59:03	0.000
07/22/02	09:00:03	0.000
07/22/02	09:01:03	0.000
07/22/02	09:02:03	0.028
07/22/02	09:03:03	0.000
07/22/02	09:04:03	0.000
07/22/02	09:05:03	0.000
07/22/02	09:06:03	0.000
07/22/02	09:07:03	0.000
07/22/02	09:08:03	0.000
07/22/02	09:09:03	0.000
07/22/02	09:10:03	0.000
07/22/02	09:11:03	0.028
07/22/02	09:12:03	0.000
07/22/02	09:13:03	0.000
07/22/02	09:14:03	0.085
07/22/02	09:15:03	0.028
07/22/02	09:16:03	0.028
07/22/02	09:17:03	0.000
07/22/02	09:18:03	0.028
07/22/02	09:19:03	0.028
07/22/02	09:20:03	0.028
07/22/02	09:21:03	0.028
07/22/02	09:22:03	0.028
07/22/02	09:23:03	0.000
07/22/02	09:24:03	0.000
07/22/02	09:25:03	0.000
07/22/02	09:26:03	0.000
07/22/02	09:27:03	-0.028
07/22/02	09:28:03	0.000
07/22/02	09:29:03	0.000
07/22/02	09:30:03	0.000
07/22/02	09:31:03	0.000
07/22/02	09:32:03	0.028
07/22/02	09:33:03	0.028
07/22/02	09:34:03	0.000
07/22/02	09:35:03	0.028
07/22/02	09:36:03	0.028
07/22/02	09:37:03	0.000
07/22/02	09:38:03	0.028
07/22/02	09:39:03	0.028
07/22/02	09:40:03	0.000
07/22/02	09:41:03	0.000
07/22/02	09:42:03	0.028
07/22/02	09:43:03	0.000
07/22/02	09:44:03	0.000
07/22/02	09:45:03	0.028
07/22/02	09:46:03	0.028
07/22/02	09:47:03	0.028
07/22/02	09:48:03	0.028
07/22/02	09:49:03	0.028
07/22/02	09:50:03	0.028
07/22/02	09:51:03	0.000
07/22/02	09:52:03	0.028
07/22/02	09:53:03	0.028
07/22/02	09:54:03	86.141
07/22/02	09:55:03	85.857
07/22/02	09:56:03	86.966
07/22/02	09:57:03	86.710
07/22/02	09:58:03	86.539
07/22/02	09:59:03	86.568
07/22/02	10:00:03	86.141
07/22/02	10:01:03	86.681
07/22/02	10:02:03	86.198
07/22/02	10:03:03	86.283
07/22/02	10:04:03	85.714
07/22/02	10:05:03	85.686
07/22/02	10:06:03	86.198
07/22/02	10:07:03	85.999
07/22/02	10:08:03	86.624
07/22/02	10:09:03	85.572
07/22/02	10:10:03	86.568
07/22/02	10:11:03	86.340
07/22/02	10:12:03	85.857
07/22/02	10:13:03	85.828
07/22/02	10:14:03	85.544
07/22/02	10:15:03	85.913
07/22/02	10:16:03	86.113
07/22/02	10:17:03	86.340
07/22/02	10:18:03	86.340
07/22/02	10:19:03	85.857
07/22/02	10:20:03	85.999
07/22/02	10:21:03	85.828
07/22/02	10:22:03	85.771
07/22/02	10:23:03	86.340
07/22/02	10:24:03	85.629
07/22/02	10:25:03	85.857
07/22/02	10:26:03	86.397
07/22/02	10:27:03	86.198
07/22/02	10:28:03	86.141
07/22/02	10:29:03	86.568
07/22/02	10:30:03	86.340
07/22/02	10:31:03	86.909
07/22/02	10:32:03	85.686
07/22/02	10:33:03	86.255
07/22/02	10:34:03	86.198
07/22/02	10:35:03	86.425
07/22/02	10:36:03	86.255
07/22/02	10:37:03	85.572
07/22/02	10:38:03	85.544
07/22/02	10:39:03	85.771
07/22/02	10:40:03	83.866
07/22/02	10:41:03	84.918
07/22/02	10:42:03	85.345
07/22/02	10:43:03	85.430
07/22/02	10:44:03	85.146
07/22/02	10:45:03	86.056
07/22/02	10:46:03	86.283
07/22/02	10:47:03	84.918
07/22/02	10:48:03	85.999
07/22/02	10:49:03	85.999
07/22/02	10:50:03	86.539
07/22/02	10:51:03	82.160
07/22/02	10:52:03	71.779
07/22/02	10:53:03	81.107
07/22/02	10:54:03	84.236
07/22/02	10:55:03	80.482
07/22/02	10:56:03	81.164
07/22/02	10:57:03	81.306
07/22/02	10:58:03	79.771
07/22/02	10:59:03	82.160
07/22/02	11:00:03	81.107
07/22/02	11:01:03	79.202
07/22/02	11:02:03	81.306
07/22/02	11:03:03	81.335
07/22/02	11:04:03	79.486
07/22/02	11:05:03	80.595
07/22/02	11:06:03	82.074
07/22/02	11:07:03	80.738
07/22/02	11:08:03	80.766
07/22/02	11:09:03	80.112
07/22/02	11:10:03	81.022
07/22/02	11:11:03	81.050
07/22/02	11:12:03	80.197
07/22/02	11:13:03	80.965
07/22/02	11:14:03	80.482
07/22/02	11:15:03	82.103
07/22/02	11:16:03	79.742
07/22/02	11:17:03	80.396
07/22/02	11:18:03	79.884
07/22/02	11:19:03	80.396
07/22/02	11:20:03	80.908
07/22/02	11:21:03	80.595
07/22/02	11:22:03	80.595
07/22/02	11:23:03	80.396
07/22/02	11:24:03	81.107
07/22/02	11:25:03	80.112
07/22/02	11:26:03	79.458
07/22/02	11:27:03	81.505
07/22/02	11:28:03	80.823
07/22/02	11:29:03	80.908
07/22/02	11:30:03	80.908
07/22/02	11:31:03	80.340
07/22/02	11:32:03	80.112
07/22/02	11:33:03	80.169
07/22/02	11:34:03	79.202
07/22/02	11:35:03	79.828
07/22/02	11:36:03	80.482
07/22/02	11:37:03	80.681
07/22/02	11:38:03	80.766
07/22/02	11:39:03	79.742
07/22/02	11:40:03	81.676
07/22/02	11:41:03	80.624
07/22/02	11:42:03	80.112
07/22/02	11:43:03	80.624
07/22/02	11:44:03	79.543
07/22/02	11:45:03	80.624
07/22/02	11:46:03	79.685
07/22/02	11:47:03	80.453
07/22/02	11:48:03	80.055
07/22/02	11:49:03	79.828
07/22/02	11:50:03	80.539
07/22/02	11:51:03	80.453
07/22/02	11:52:03	79.970
07/22/02	11:53:03	79.486
07/22/02	11:54:03	79.117
07/22/02	11:55:03	79.742
07/22/02	11:56:03	79.828
07/22/02	11:57:03	78.491
07/22/02	11:58:03	80.738
07/22/02	11:59:03	78.832
07/22/02	12:00:03	79.828
07/22/02	12:01:03	79.458
07/22/02	12:02:03	79.600
07/22/02	12:03:03	78.974
07/22/02	12:04:03	79.884
07/22/02	12:05:03	79.685
07/22/02	12:06:03	79.031
07/22/02	12:07:03	80.311
07/22/02	12:08:03	80.766
07/22/02	12:09:03	81.392
07/22/02	12:10:03	79.174
07/22/02	12:11:03	79.884
07/22/02	12:12:03	79.742
07/22/02	12:13:03	79.174
07/22/02	12:14:03	80.766
07/22/02	12:15:03	79.344
07/22/02	12:16:03	80.055

GIRARD AND EARLE - NO. 7552 cont.

Date	Time	Pres (PSI)
07/22/02	12:17:03	80.624
07/22/02	12:18:03	79.316
07/22/02	12:19:03	80.112
07/22/02	12:20:03	80.396
07/22/02	12:21:03	79.742
07/22/02	12:22:03	78.747
07/22/02	12:23:03	80.254
07/22/02	12:24:03	80.766
07/22/02	12:25:03	78.832
07/22/02	12:26:03	80.055
07/22/02	12:27:03	80.766
07/22/02	12:28:03	79.771
07/22/02	12:29:03	79.771
07/22/02	12:30:03	79.970
07/22/02	12:31:03	77.865
07/22/02	12:32:03	79.259
07/22/02	12:33:03	79.486
07/22/02	12:34:03	79.486
07/22/02	12:35:03	78.974
07/22/02	12:36:03	79.060
07/22/02	12:37:03	78.690
07/22/02	12:38:03	79.486
07/22/02	12:39:03	79.685
07/22/02	12:40:03	80.112
07/22/02	12:41:03	80.482
07/22/02	12:42:03	80.027
07/22/02	12:43:03	78.889
07/22/02	12:44:03	79.771
07/22/02	12:45:03	80.169
07/22/02	12:46:03	79.458
07/22/02	12:47:03	78.747
07/22/02	12:48:03	79.543
07/22/02	12:49:03	78.889
07/22/02	12:50:03	79.884
07/22/02	12:51:03	78.832
07/22/02	12:52:03	79.060
07/22/02	12:53:03	79.031
07/22/02	12:54:03	79.629
07/22/02	12:55:03	80.055
07/22/02	12:56:03	80.738
07/22/02	12:57:03	79.401
07/22/02	12:58:03	79.742
07/22/02	12:59:03	77.695
07/22/02	13:00:03	78.918
07/22/02	13:01:03	78.605
07/22/02	13:02:03	79.600
07/22/02	13:03:03	79.486
07/22/02	13:04:03	79.316
07/22/02	13:05:03	78.832
07/22/02	13:06:03	79.543
07/22/02	13:07:03	77.979
07/22/02	13:08:03	79.174
07/22/02	13:09:03	79.600
07/22/02	13:10:03	79.259
07/22/02	13:11:03	79.600
07/22/02	13:12:03	79.771
07/22/02	13:13:03	79.344
07/22/02	13:14:03	78.349
07/22/02	13:15:03	79.344
07/22/02	13:16:03	79.259
07/22/02	13:17:03	78.889
07/22/02	13:18:03	79.970
07/22/02	13:19:03	79.174
07/22/02	13:20:03	80.311
07/22/02	13:21:03	78.889
07/22/02	13:22:03	79.458
07/22/02	13:23:03	79.316
07/22/02	13:24:03	79.060
07/22/02	13:25:03	87.734
07/22/02	13:26:03	79.458
07/22/02	13:27:03	80.453
07/22/02	13:28:03	81.392
07/22/02	13:29:03	80.595
07/22/02	13:30:03	80.482
07/22/02	13:31:03	80.738
07/22/02	13:32:03	81.392
07/22/02	13:33:03	80.880
07/22/02	13:34:03	80.681
07/22/02	13:35:03	81.335
07/22/02	13:36:03	80.482
07/22/02	13:37:03	80.738
07/22/02	13:38:03	80.738
07/22/02	13:39:03	79.629
07/22/02	13:40:03	80.197
07/22/02	13:41:03	80.311
07/22/02	13:42:03	80.681
07/22/02	13:43:03	81.193
07/22/02	13:44:03	80.396
07/22/02	13:45:03	80.823
07/22/02	13:46:03	80.624
07/22/02	13:47:03	80.965
07/22/02	13:48:03	80.681
07/22/02	13:49:03	81.335
07/22/02	13:50:03	79.600
07/22/02	13:51:03	80.197
07/22/02	13:52:03	79.884
07/22/02	13:53:03	81.107
07/22/02	13:54:03	80.823
07/22/02	13:55:03	80.880
07/22/02	13:56:03	80.453
07/22/02	13:57:03	81.306
07/22/02	13:58:03	80.823
07/22/02	13:59:03	79.884
07/22/02	14:00:03	81.250
07/22/02	14:01:03	80.624
07/22/02	14:02:03	79.486
07/22/02	14:03:03	80.169
07/22/02	14:04:03	82.017
07/22/02	14:05:03	80.453
07/22/02	14:06:03	81.335
07/22/02	14:07:03	79.742
07/22/02	14:08:03	80.595
07/22/02	14:09:03	80.340
07/22/02	14:10:03	80.595
07/22/02	14:11:03	79.600
07/22/02	14:12:03	79.600
07/22/02	14:13:03	80.595
07/22/02	14:14:03	79.344
07/22/02	14:15:03	80.027
07/22/02	14:16:03	81.449
07/22/02	14:17:03	81.306
07/22/02	14:18:03	80.027
07/22/02	14:19:03	80.681
07/22/02	14:20:03	80.823
07/22/02	14:21:03	81.306
07/22/02	14:22:03	80.965
07/22/02	14:23:03	80.738
07/22/02	14:24:03	81.392
07/22/02	14:25:03	80.169
07/22/02	14:26:03	80.766
07/22/02	14:27:03	79.828
07/22/02	14:28:03	80.055
07/22/02	14:29:03	80.311
07/22/02	14:30:03	80.595
07/22/02	14:31:03	80.112
07/22/02	14:32:03	80.595
07/22/02	14:33:03	80.254
07/22/02	14:34:03	80.396
07/22/02	14:35:03	80.738
07/22/02	14:36:03	81.392
07/22/02	14:37:03	80.624
07/22/02	14:38:03	81.193
07/22/02	14:39:03	80.055
07/22/02	14:40:03	79.828
07/22/02	14:41:03	81.164
07/22/02	14:42:03	79.685
07/22/02	14:43:03	81.107
07/22/02	14:44:03	82.017
07/22/02	14:45:03	80.254
07/22/02	14:46:03	81.164
07/22/02	14:47:03	80.169
07/22/02	14:48:03	80.482
07/22/02	14:49:03	79.884
07/22/02	14:50:03	80.624
07/22/02	14:51:03	81.392
07/22/02	14:52:03	80.681
07/22/02	14:53:03	81.107
07/22/02	14:54:03	81.164
07/22/02	14:55:03	81.193
07/22/02	14:56:03	80.396
07/22/02	14:57:03	80.766
07/22/02	14:58:03	81.050
07/22/02	14:59:03	81.050
07/22/02	15:00:03	80.681
07/22/02	15:01:03	81.392
07/22/02	15:02:03	80.254
07/22/02	15:03:03	81.505
07/22/02	15:04:03	80.340
07/22/02	15:05:03	80.197
07/22/02	15:06:03	80.254
07/22/02	15:07:03	80.197
07/22/02	15:08:03	80.539
07/22/02	15:09:03	80.595
07/22/02	15:10:03	80.908
07/22/02	15:11:03	80.823
07/22/02	15:12:03	80.965
07/22/02	15:13:03	80.027
07/22/02	15:14:03	80.681
07/22/02	15:15:03	80.880
07/22/02	15:16:03	80.681
07/22/02	15:17:03	79.685
07/22/02	15:18:03	80.027
07/22/02	15:19:03	79.913
07/22/02	15:20:03	81.790
07/22/02	15:21:03	80.453
07/22/02	15:22:03	81.306
07/22/02	15:23:03	81.022
07/22/02	15:24:03	80.197
07/22/02	15:25:03	79.685
07/22/02	15:26:03	82.160
07/22/02	15:27:03	80.539
07/22/02	15:28:03	81.875
07/22/02	15:29:03	80.880
07/22/02	15:30:03	80.169
07/22/02	15:31:03	80.766
07/22/02	15:32:03	80.738
07/22/02	15:33:03	81.306
07/22/02	15:34:03	80.311
07/22/02	15:35:03	80.823
07/22/02	15:36:03	80.681
07/22/02	15:37:03	80.254
07/22/02	15:38:03	79.543
07/22/02	15:39:03	80.681
07/22/02	15:40:03	80.311
07/22/02	15:41:03	81.335
07/22/02	15:42:03	81.022
07/22/02	15:43:03	80.908
07/22/02	15:44:03	80.453
07/22/02	15:45:03	81.193
07/22/02	15:46:03	80.624
07/22/02	15:47:03	80.027
07/22/02	15:48:03	81.392
07/22/02	15:49:03	81.335
07/22/02	15:50:03	79.600
07/22/02	15:51:03	80.595
07/22/02	15:52:03	80.766
07/22/02	15:53:03	81.818
07/22/02	15:54:03	80.738
07/22/02	15:55:03	80.880
07/22/02	15:56:03	79.401
07/22/02	15:57:03	80.823
07/22/02	15:58:03	80.823
07/22/02	15:59:03	80.055
07/22/02	16:00:03	81.335
07/22/02	16:01:03	79.771
07/22/02	16:02:03	81.022
07/22/02	16:03:03	81.932
07/22/02	16:04:03	80.254
07/22/02	16:05:03	80.340
07/22/02	16:06:03	80.482
07/22/02	16:07:03	81.505
07/22/02	16:08:03	80.055
07/22/02	16:09:03	81.932
07/22/02	16:10:03	80.766
07/22/02	16:11:03	80.738
07/22/02	16:12:03	80.766
07/22/02	16:13:03	80.027
07/22/02	16:14:03	80.112
07/22/02	16:15:03	81.193
07/22/02	16:16:03	80.624
07/22/02	16:17:03	80.681
07/22/02	16:18:03	80.908
07/22/02	16:19:03	80.965
07/22/02	16:20:03	79.259
07/22/02	16:21:03	79.828
07/22/02	16:22:03	80.112
07/22/02	16:23:03	80.311
07/22/02	16:24:03	80.766
07/22/02	16:25:03	81.818
07/22/02	16:26:03	79.970
07/22/02	16:27:03	81.164
07/22/02	16:28:03	80.311
07/22/02	16:29:03	81.107
07/22/02	16:30:03	80.169
07/22/02	16:31:03	80.197
07/22/02	16:32:03	81.591
07/22/02	16:33:03	79.629
07/22/02	16:34:03	81.335
07/22/02	16:35:03	79.600
07/22/02	16:36:03	82.245
07/22/02	16:37:03	79.259
07/22/02	16:38:03	81.932
07/22/02	16:39:03	80.112
07/22/02	16:40:03	80.965

GIRARD AND EARLE - NO. 7552 cont.

Date	Time	Pres (PSI)
07/22/02	16:41:03	80.738
07/22/02	16:42:03	79.884
07/22/02	16:43:03	80.112
07/22/02	16:44:03	80.595
07/22/02	16:45:03	80.169
07/22/02	16:46:03	80.908
07/22/02	16:47:03	78.832
07/22/02	16:48:03	81.449
07/22/02	16:49:03	78.775
07/22/02	16:50:03	80.396
07/22/02	16:51:03	81.107
07/22/02	16:52:03	80.169
07/22/02	16:53:03	81.050
07/22/02	16:54:03	81.107
07/22/02	16:55:03	80.624
07/22/02	16:56:03	81.193
07/22/02	16:57:03	80.624
07/22/02	16:58:03	80.965
07/22/02	16:59:03	81.250
07/22/02	17:00:03	80.482
07/22/02	17:01:03	90.663
07/22/02	17:02:03	81.392
07/22/02	17:03:03	81.022
07/22/02	17:04:03	80.908
07/22/02	17:05:03	82.359
07/22/02	17:06:03	82.387
07/22/02	17:07:03	81.733
07/22/02	17:08:03	82.103
07/22/02	17:09:03	82.444
07/22/02	17:10:03	81.961
07/22/02	17:11:03	83.155
07/22/02	17:12:03	81.335
07/22/02	17:13:03	81.676
07/22/02	17:14:03	82.245
07/22/02	17:15:03	81.306
07/22/02	17:16:03	82.387
07/22/02	17:17:03	82.160
07/22/02	17:18:03	82.643
07/22/02	17:19:03	83.297
07/22/02	17:20:03	81.591
07/22/02	17:21:03	82.529
07/22/02	17:22:03	81.534
07/22/02	17:23:03	82.785
07/22/02	17:24:03	82.501
07/22/02	17:25:03	82.643
07/22/02	17:26:03	81.050
07/22/02	17:27:03	80.624
07/22/02	17:28:03	82.074
07/22/02	17:29:03	81.961
07/22/02	17:30:03	82.160
07/22/02	17:31:03	81.648
07/22/02	17:32:03	82.359
07/22/02	17:33:03	81.875
07/22/02	17:34:03	82.302
07/22/02	17:35:03	82.103
07/22/02	17:36:03	82.387
07/22/02	17:37:03	81.733
07/22/02	17:38:03	82.103
07/22/02	17:39:03	81.306
07/22/02	17:40:03	81.534
07/22/02	17:41:03	83.240
07/22/02	17:42:03	82.074
07/22/02	17:43:03	81.932
07/22/02	17:44:03	81.193
07/22/02	17:45:03	82.302
07/22/02	17:46:03	81.676
07/22/02	17:47:03	81.790
07/22/02	17:48:03	80.340
07/22/02	17:49:03	82.216
07/22/02	17:50:03	81.818
07/22/02	17:51:03	82.074
07/22/02	17:52:03	81.534
07/22/02	17:53:03	83.496
07/22/02	17:54:03	80.482
07/22/02	17:55:03	82.017
07/22/02	17:56:03	82.501
07/22/02	17:57:03	82.444
07/22/02	17:58:03	82.359
07/22/02	17:59:03	81.733
07/22/02	18:00:03	82.017
07/22/02	18:01:03	82.103
07/22/02	18:02:03	82.302
07/22/02	18:03:03	82.444
07/22/02	18:04:03	82.501
07/22/02	18:05:03	81.733
07/22/02	18:06:03	82.671
07/22/02	18:07:03	81.591
07/22/02	18:08:03	82.017
07/22/02	18:09:03	80.681
07/22/02	18:10:03	81.534
07/22/02	18:11:03	82.814
07/22/02	18:12:03	81.306
07/22/02	18:13:03	82.671
07/22/02	18:14:03	82.216
07/22/02	18:15:03	82.359
07/22/02	18:16:03	81.676
07/22/02	18:17:03	81.193
07/22/02	18:18:03	82.814
07/22/02	18:19:03	81.505
07/22/02	18:20:03	82.074
07/22/02	18:21:03	81.961
07/22/02	18:22:03	81.790
07/22/02	18:23:03	81.818
07/22/02	18:24:03	82.586
07/22/02	18:25:03	81.505
07/22/02	18:26:03	81.676
07/22/02	18:27:03	81.790
07/22/02	18:28:03	81.449
07/22/02	18:29:03	82.671
07/22/02	18:30:03	83.098
07/22/02	18:31:03	81.250
07/22/02	18:32:03	82.160
07/22/02	18:33:03	81.306
07/22/02	18:34:03	82.359
07/22/02	18:35:03	81.818
07/22/02	18:36:03	81.733
07/22/02	18:37:03	82.586
07/22/02	18:38:03	81.534
07/22/02	18:39:03	81.932
07/22/02	18:40:03	81.107
07/22/02	18:41:03	82.728
07/22/02	18:42:03	82.444
07/22/02	18:43:03	81.733
07/22/02	18:44:03	81.505
07/22/02	18:45:03	82.245
07/22/02	18:46:03	82.387
07/22/02	18:47:03	81.193
07/22/02	18:48:03	82.359
07/22/02	18:49:03	81.250
07/22/02	18:50:03	81.193
07/22/02	18:51:03	81.534
07/22/02	18:52:03	82.387
07/22/02	18:53:03	82.216
07/22/02	18:54:03	80.880
07/22/02	18:55:03	82.444
07/22/02	18:56:03	82.814
07/22/02	18:57:03	81.534
07/22/02	18:58:03	81.164
07/22/02	18:59:03	81.733
07/22/02	19:00:03	82.871
07/22/02	19:01:03	82.529
07/22/02	19:02:03	81.335
07/22/02	19:03:03	82.444
07/22/02	19:04:03	82.359
07/22/02	19:05:03	82.501
07/22/02	19:06:03	82.501
07/22/02	19:07:03	81.818
07/22/02	19:08:03	82.387
07/22/02	19:09:03	81.790
07/22/02	19:10:03	81.932
07/22/02	19:11:03	82.728
07/22/02	19:12:03	82.216
07/22/02	19:13:03	81.875
07/22/02	19:14:03	82.444
07/22/02	19:15:03	81.335
07/22/02	19:16:03	81.392
07/22/02	19:17:03	80.766
07/22/02	19:18:03	82.671
07/22/02	19:19:03	81.733
07/22/02	19:20:03	81.534
07/22/02	19:21:03	82.444
07/22/02	19:22:03	82.359
07/22/02	19:23:03	81.534
07/22/02	19:24:03	82.074
07/22/02	19:25:03	81.648
07/22/02	19:26:03	82.501
07/22/02	19:27:03	82.444
07/22/02	19:28:03	81.392
07/22/02	19:29:03	82.444
07/22/02	19:30:03	82.387
07/22/02	19:31:03	82.728
07/22/02	19:32:03	83.098
07/22/02	19:33:03	82.302
07/22/02	19:34:03	83.240
07/22/02	19:35:03	81.648
07/22/02	19:36:03	82.814
07/22/02	19:37:03	81.250
07/22/02	19:38:03	82.671
07/22/02	19:39:03	82.074
07/22/02	19:40:03	81.961
07/22/02	19:41:03	81.392
07/22/02	19:42:03	81.733
07/22/02	19:43:03	83.013
07/22/02	19:44:03	82.529
07/22/02	19:45:03	82.871
07/22/02	19:46:03	82.017
07/22/02	19:47:03	82.728
07/22/02	19:48:03	80.908
07/22/02	19:49:03	82.359
07/22/02	19:50:03	82.160
07/22/02	19:51:03	82.017
07/22/02	19:52:03	82.245
07/22/02	19:53:03	82.671
07/22/02	19:54:03	83.098
07/22/02	19:55:03	82.302
07/22/02	19:56:03	82.671
07/22/02	19:57:03	82.785
07/22/02	19:58:03	82.359
07/22/02	19:59:03	82.671
07/22/02	20:00:03	81.648
07/22/02	20:01:03	81.591
07/22/02	20:02:03	83.013
07/22/02	20:03:03	82.671
07/22/02	20:04:03	82.785
07/22/02	20:05:03	83.013
07/22/02	20:06:03	83.155
07/22/02	20:07:03	81.875
07/22/02	20:08:03	82.245
07/22/02	20:09:03	82.785
07/22/02	20:10:03	82.302
07/22/02	20:11:03	82.671
07/22/02	20:12:03	82.359
07/22/02	20:13:03	82.103
07/22/02	20:14:03	81.648
07/22/02	20:15:03	82.359
07/22/02	20:16:03	82.956
07/22/02	20:17:03	82.160
07/22/02	20:18:03	81.648
07/22/02	20:19:03	82.160
07/22/02	20:20:03	82.529
07/22/02	20:21:03	80.595
07/22/02	20:22:03	82.444
07/22/02	20:23:03	82.728
07/22/02	20:24:03	82.586
07/22/02	20:25:03	82.444
07/22/02	20:26:03	82.160
07/22/02	20:27:03	82.359
07/22/02	20:28:03	82.586
07/22/02	20:29:03	82.956
07/22/02	20:30:03	82.245
07/22/02	20:31:03	82.927
07/22/02	20:32:03	81.648
07/22/02	20:33:03	82.017
07/22/02	20:34:03	82.586
07/22/02	20:35:03	82.302
07/22/02	20:36:03	82.643
07/22/02	20:37:03	80.965
07/22/02	20:38:03	81.790
07/22/02	20:39:03	82.444
07/22/02	20:40:03	82.671
07/22/02	20:41:03	82.927
07/22/02	20:42:03	83.070
07/22/02	20:43:03	82.871
07/22/02	20:44:03	82.785
07/22/02	20:45:03	81.875
07/22/02	20:46:03	83.582
07/22/02	20:47:03	81.505
07/22/02	20:48:03	82.074
07/22/02	20:49:03	82.444
07/22/02	20:50:03	82.359
07/22/02	20:51:03	83.354
07/22/02	20:52:03	82.785
07/22/02	20:53:03	82.728
07/22/02	20:54:03	83.525
07/22/02	20:55:03	82.245
07/22/02	20:56:03	83.525
07/22/02	20:57:03	82.785
07/22/02	20:58:03	82.586
07/22/02	20:59:03	82.785
07/22/02	21:00:03	82.359
07/22/02	21:01:03	82.927
07/22/02	21:02:03	82.103
07/22/02	21:03:03	81.392
07/22/02	21:04:03	82.728

GIRARD AND EARLE - NO. 7552 cont.

Date	Time	Pres (PSI)
07/22/02	21:05:03	83.013
07/22/02	21:06:03	82.387
07/22/02	21:07:03	81.733
07/22/02	21:08:03	82.103
07/22/02	21:09:03	82.785
07/22/02	21:10:03	82.956
07/22/02	21:11:03	83.354
07/22/02	21:12:03	82.785
07/22/02	21:13:03	83.638
07/22/02	21:14:03	81.790
07/22/02	21:15:03	81.193
07/22/02	21:16:03	82.671
07/22/02	21:17:03	83.496
07/22/02	21:18:03	82.927
07/22/02	21:19:03	82.444
07/22/02	21:20:03	83.809
07/22/02	21:21:03	83.098
07/22/02	21:22:03	81.961
07/22/02	21:23:03	82.302
07/22/02	21:24:03	81.961
07/22/02	21:25:03	82.671
07/22/02	21:26:03	82.501
07/22/02	21:27:03	82.814
07/22/02	21:28:03	82.103
07/22/02	21:29:03	83.240
07/22/02	21:30:03	82.586
07/22/02	21:31:03	82.586
07/22/02	21:32:03	83.212
07/22/02	21:33:03	82.728
07/22/02	21:34:03	81.932
07/22/02	21:35:03	82.387
07/22/02	21:36:03	84.008
07/22/02	21:37:03	83.667
07/22/02	21:38:03	83.098
07/22/02	21:39:03	82.785
07/22/02	21:40:03	83.013
07/22/02	21:41:03	83.098
07/22/02	21:42:03	83.439
07/22/02	21:43:03	83.667
07/22/02	21:44:03	82.017
07/22/02	21:45:03	83.354
07/22/02	21:46:03	83.297
07/22/02	21:47:03	82.444
07/22/02	21:48:03	82.160
07/22/02	21:49:03	82.927
07/22/02	21:50:03	83.212
07/22/02	21:51:03	83.297
07/22/02	21:52:03	82.728
07/22/02	21:53:03	82.871
07/22/02	21:54:03	83.923
07/22/02	21:55:03	84.150
07/22/02	21:56:03	83.951
07/22/02	21:57:03	83.382
07/22/02	21:58:03	82.501
07/22/02	21:59:03	83.070
07/22/02	22:00:03	82.501
07/22/02	22:01:03	83.297
07/22/02	22:02:03	82.927
07/22/02	22:03:03	82.359
07/22/02	22:04:03	82.103
07/22/02	22:05:03	83.439
07/22/02	22:06:03	83.240
07/22/02	22:07:03	82.927
07/22/02	22:08:03	83.212
07/22/02	22:09:03	83.439
07/22/02	22:10:03	82.245
07/22/02	22:11:03	82.529
07/22/02	22:12:03	83.638
07/22/02	22:13:03	82.529
07/22/02	22:14:03	83.070
07/22/02	22:15:03	82.785
07/22/02	22:16:03	82.643
07/22/02	22:17:03	83.070
07/22/02	22:18:03	83.070
07/22/02	22:19:03	83.013
07/22/02	22:20:03	83.809
07/22/02	22:21:03	83.240
07/22/02	22:22:03	82.956
07/22/02	22:23:03	82.501
07/22/02	22:24:03	83.070
07/22/02	22:25:03	82.956
07/22/02	22:26:03	83.013
07/22/02	22:27:03	83.781
07/22/02	22:28:03	82.814
07/22/02	22:29:03	82.871
07/22/02	22:30:03	82.671
07/22/02	22:31:03	82.871
07/22/02	22:32:03	82.956
07/22/02	22:33:03	83.667
07/22/02	22:34:03	83.781
07/22/02	22:35:03	83.382
07/22/02	22:36:03	82.814
07/22/02	22:37:03	83.724
07/22/02	22:38:03	83.212
07/22/02	22:39:03	82.814
07/22/02	22:40:03	84.548
07/22/02	22:41:03	83.297
07/22/02	22:42:03	83.781
07/22/02	22:43:03	84.292
07/22/02	22:44:03	75.107
07/22/02	22:45:03	85.572
07/22/02	22:46:03	77.780
07/22/02	22:47:03	81.790
07/22/02	22:48:03	81.591
07/22/02	22:49:03	81.050
07/22/02	22:50:03	82.017
07/22/02	22:51:03	80.311
07/22/02	22:52:03	81.164
07/22/02	22:53:03	81.505
07/22/02	22:54:03	81.449
07/22/02	22:55:03	80.681
07/22/02	22:56:03	81.676
07/22/02	22:57:03	80.908
07/22/02	22:58:03	81.022
07/22/02	22:59:03	81.648
07/22/02	23:00:03	81.050
07/22/02	23:01:03	81.107
07/22/02	23:02:03	80.055
07/22/02	23:03:03	80.027
07/22/02	23:04:03	81.449
07/22/02	23:05:03	80.681
07/22/02	23:06:03	80.595
07/22/02	23:07:03	81.591
07/22/02	23:08:03	81.449
07/22/02	23:09:03	81.022
07/22/02	23:10:03	81.050
07/22/02	23:11:03	82.302
07/22/02	23:12:03	81.534
07/22/02	23:13:03	79.202
07/22/02	23:14:03	81.676
07/22/02	23:15:03	81.193
07/22/02	23:16:03	81.022
07/22/02	23:17:03	81.534
07/22/02	23:18:03	80.539
07/22/02	23:19:03	81.306
07/22/02	23:20:03	80.880
07/22/02	23:21:03	80.823
07/22/02	23:22:03	81.022
07/22/02	23:23:03	81.107
07/22/02	23:24:03	80.681
07/22/02	23:25:03	82.160
07/22/02	23:26:03	79.771
07/22/02	23:27:03	81.335
07/22/02	23:28:03	80.624
07/22/02	23:29:03	80.396
07/22/02	23:30:03	80.738
07/22/02	23:31:03	80.539
07/22/02	23:32:03	81.050
07/22/02	23:33:03	81.534
07/22/02	23:34:03	80.539
07/22/02	23:35:03	82.387
07/22/02	23:36:03	81.050
07/22/02	23:37:03	81.932
07/22/02	23:38:03	80.681
07/22/02	23:39:03	82.387
07/22/02	23:40:03	80.908
07/22/02	23:41:03	81.961
07/22/02	23:42:03	80.197
07/22/02	23:43:03	80.738
07/22/02	23:44:03	81.306
07/22/02	23:45:03	81.932
07/22/02	23:46:03	79.913
07/22/02	23:47:03	80.880
07/22/02	23:48:03	81.591
07/22/02	23:49:03	79.884
07/22/02	23:50:03	81.534
07/22/02	23:51:03	79.884
07/22/02	23:52:03	81.107
07/22/02	23:53:03	81.534
07/22/02	23:54:03	80.169
07/22/02	23:55:03	82.160
07/22/02	23:56:03	80.453
07/22/02	23:57:03	81.193
07/22/02	23:58:03	82.017
07/22/02	23:59:03	80.340
07/23/02	00:00:03	80.681
07/23/02	00:01:03	80.880
07/23/02	00:02:03	81.193
07/23/02	00:03:03	81.875
07/23/02	00:04:03	80.823
07/23/02	00:05:03	80.539
07/23/02	00:06:03	81.648
07/23/02	00:07:03	81.193
07/23/02	00:08:03	81.107
07/23/02	00:09:03	81.449
07/23/02	00:10:03	80.823
07/23/02	00:11:03	81.164
07/23/02	00:12:03	81.022
07/23/02	00:13:03	81.107
07/23/02	00:14:03	81.050
07/23/02	00:15:03	81.534
07/23/02	00:16:03	80.340
07/23/02	00:17:03	80.823
07/23/02	00:18:03	80.965
07/23/02	00:19:03	81.193
07/23/02	00:20:03	80.254
07/23/02	00:21:03	81.392
07/23/02	00:22:03	80.681
07/23/02	00:23:03	79.259
07/23/02	00:24:03	80.539
07/23/02	00:25:03	80.482
07/23/02	00:26:03	80.823
07/23/02	00:27:03	81.591
07/23/02	00:28:03	81.392
07/23/02	00:29:03	80.340
07/23/02	00:30:03	80.624
07/23/02	00:31:03	80.340
07/23/02	00:32:03	79.486
07/23/02	00:33:03	81.050
07/23/02	00:34:03	80.197
07/23/02	00:35:03	80.766
07/23/02	00:36:03	79.884
07/23/02	00:37:03	80.624
07/23/02	00:38:03	81.306
07/23/02	00:39:03	80.311
07/23/02	00:40:03	80.908
07/23/02	00:41:03	80.169
07/23/02	00:42:03	80.823
07/23/02	00:43:03	80.453
07/23/02	00:44:03	80.681
07/23/02	00:45:03	81.335
07/23/02	00:46:03	79.600
07/23/02	00:47:03	80.738
07/23/02	00:48:03	81.335
07/23/02	00:49:03	80.396
07/23/02	00:50:03	80.539
07/23/02	00:51:03	81.050
07/23/02	00:52:03	80.396
07/23/02	00:53:03	81.392
07/23/02	00:54:03	80.880
07/23/02	00:55:03	81.107
07/23/02	00:56:03	80.908
07/23/02	00:57:03	81.591
07/23/02	00:58:03	80.254
07/23/02	00:59:03	80.453
07/23/02	01:00:03	80.254
07/23/02	01:01:03	81.505
07/23/02	01:02:03	79.742
07/23/02	01:03:03	81.335
07/23/02	01:04:03	81.022
07/23/02	01:05:03	80.624
07/23/02	01:06:03	81.107
07/23/02	01:07:03	80.880
07/23/02	01:08:03	80.766
07/23/02	01:09:03	80.453
07/23/02	01:10:03	80.453
07/23/02	01:11:03	80.482
07/23/02	01:12:03	80.766
07/23/02	01:13:03	81.022
07/23/02	01:14:03	79.828
07/23/02	01:15:03	81.392
07/23/02	01:16:03	80.254
07/23/02	01:17:03	79.970
07/23/02	01:18:03	81.392
07/23/02	01:19:03	80.396
07/23/02	01:20:03	79.685
07/23/02	01:21:03	81.050
07/23/02	01:22:03	80.539
07/23/02	01:23:03	80.766
07/23/02	01:24:03	81.392
07/23/02	01:25:03	80.681
07/23/02	01:26:03	81.022
07/23/02	01:27:03	80.340
07/23/02	01:28:03	81.591

GIRARD AND EARLE - NO. 7552 cont.

Date	Time	Pres (PSI)	Date	Time	Pres (PSI)	Date	Time	Pres (PSI)	Date	Time	Pres (PSI)
07/23/02	01:29:03	80.112	07/23/02	02:35:03	85.117	07/23/02	03:41:03	85.572	07/23/02	04:47:03	82.302
07/23/02	01:30:03	80.396	07/23/02	02:36:03	84.918	07/23/02	03:42:03	85.288	07/23/02	04:48:03	81.875
07/23/02	01:31:03	80.681	07/23/02	02:37:03	85.060	07/23/02	03:43:03	85.714	07/23/02	04:49:03	81.648
07/23/02	01:32:03	80.197	07/23/02	02:38:03	84.406	07/23/02	03:44:03	85.913	07/23/02	04:50:03	82.074
07/23/02	01:33:03	81.050	07/23/02	02:39:03	84.236	07/23/02	03:45:03	86.056	07/23/02	04:51:03	82.074
07/23/02	01:34:03	80.766	07/23/02	02:40:03	85.259	07/23/02	03:46:03	85.572	07/23/02	04:52:03	81.392
07/23/02	01:35:03	80.681	07/23/02	02:41:03	85.003	07/23/02	03:47:03	85.714	07/23/02	04:53:03	81.961
07/23/02	01:36:03	80.254	07/23/02	02:42:03	85.629	07/23/02	03:48:03	85.714	07/23/02	04:54:03	81.676
07/23/02	01:37:03	80.738	07/23/02	02:43:03	85.060	07/23/02	03:49:03	85.999	07/23/02	04:55:03	82.074
07/23/02	01:38:03	80.311	07/23/02	02:44:03	84.861	07/23/02	03:50:03	85.913	07/23/02	04:56:03	82.529
07/23/02	01:39:03	80.539	07/23/02	02:45:03	84.691	07/23/02	03:51:03	85.857	07/23/02	04:57:03	81.335
07/23/02	01:40:03	80.453	07/23/02	02:46:03	85.060	07/23/02	03:52:03	85.572	07/23/02	04:58:03	82.444
07/23/02	01:41:03	81.022	07/23/02	02:47:03	85.402	07/23/02	03:53:03	85.203	07/23/02	04:59:03	82.103
07/23/02	01:42:03	80.738	07/23/02	02:48:03	85.288	07/23/02	03:54:03	85.402	07/23/02	05:00:03	81.818
07/23/02	01:43:03	81.164	07/23/02	02:49:03	85.003	07/23/02	03:55:03	85.686	07/23/02	05:01:03	82.074
07/23/02	01:44:03	80.595	07/23/02	02:50:03	85.345	07/23/02	03:56:03	85.686	07/23/02	05:02:03	81.164
07/23/02	01:45:03	80.908	07/23/02	02:51:03	84.975	07/23/02	03:57:03	85.003	07/23/02	05:03:03	82.359
07/23/02	01:46:03	80.681	07/23/02	02:52:03	85.487	07/23/02	03:58:03	85.402	07/23/02	05:04:03	80.766
07/23/02	01:47:03	80.624	07/23/02	02:53:03	84.918	07/23/02	03:59:03	85.544	07/23/02	05:05:03	81.591
07/23/02	01:48:03	80.681	07/23/02	02:54:03	84.833	07/23/02	04:00:03	85.003	07/23/02	05:06:03	81.676
07/23/02	01:49:03	80.055	07/23/02	02:55:03	84.719	07/23/02	04:01:03	85.629	07/23/02	05:07:03	81.505
07/23/02	01:50:03	79.685	07/23/02	02:56:03	84.776	07/23/02	04:02:03	85.572	07/23/02	05:08:03	81.392
07/23/02	01:51:03	80.880	07/23/02	02:57:03	84.435	07/23/02	04:03:03	85.544	07/23/02	05:09:03	81.676
07/23/02	01:52:03	80.055	07/23/02	02:58:03	84.918	07/23/02	04:04:03	85.544	07/23/02	05:10:03	81.932
07/23/02	01:53:03	80.482	07/23/02	02:59:03	84.634	07/23/02	04:05:03	85.828	07/23/02	05:11:03	82.359
07/23/02	01:54:03	80.738	07/23/02	03:00:03	84.918	07/23/02	04:06:03	85.487	07/23/02	05:12:03	81.875
07/23/02	01:55:03	79.913	07/23/02	03:01:03	84.719	07/23/02	04:07:03	85.686	07/23/02	05:13:03	81.932
07/23/02	01:56:03	80.197	07/23/02	03:02:03	85.146	07/23/02	04:08:03	85.288	07/23/02	05:14:03	81.193
07/23/02	01:57:03	80.539	07/23/02	03:03:03	85.060	07/23/02	04:09:03	85.913	07/23/02	05:15:03	81.392
07/23/02	01:58:03	80.738	07/23/02	03:04:03	84.406	07/23/02	04:10:03	85.487	07/23/02	05:16:03	82.501
07/23/02	01:59:03	80.055	07/23/02	03:05:03	84.719	07/23/02	04:11:03	85.345	07/23/02	05:17:03	81.961
07/23/02	02:00:03	80.197	07/23/02	03:06:03	84.577	07/23/02	04:12:03	85.544	07/23/02	05:18:03	81.818
07/23/02	02:01:03	79.344	07/23/02	03:07:03	84.776	07/23/02	04:13:03	85.572	07/23/02	05:19:03	82.501
07/23/02	02:02:03	80.880	07/23/02	03:08:03	84.577	07/23/02	04:14:03	85.402	07/23/02	05:20:03	81.648
07/23/02	02:03:03	81.534	07/23/02	03:09:03	84.691	07/23/02	04:15:03	85.544	07/23/02	05:21:03	81.505
07/23/02	02:04:03	79.742	07/23/02	03:10:03	85.203	07/23/02	04:16:03	85.203	07/23/02	05:22:03	82.245
07/23/02	02:05:03	80.539	07/23/02	03:11:03	84.634	07/23/02	04:17:03	85.771	07/23/02	05:23:03	81.449
07/23/02	02:06:03	79.884	07/23/02	03:12:03	84.548	07/23/02	04:18:03	85.345	07/23/02	05:24:03	82.103
07/23/02	02:07:03	80.254	07/23/02	03:13:03	85.117	07/23/02	04:19:03	85.771	07/23/02	05:25:03	81.961
07/23/02	02:08:03	80.112	07/23/02	03:14:03	84.691	07/23/02	04:20:03	85.487	07/23/02	05:26:03	81.449
07/23/02	02:09:03	79.742	07/23/02	03:15:03	85.003	07/23/02	04:21:03	85.828	07/23/02	05:27:03	81.932
07/23/02	02:10:03	79.970	07/23/02	03:16:03	84.548	07/23/02	04:22:03	85.771	07/23/02	05:28:03	81.733
07/23/02	02:11:03	80.965	07/23/02	03:17:03	84.776	07/23/02	04:23:03	85.430	07/23/02	05:29:03	81.733
07/23/02	02:12:03	80.340	07/23/02	03:18:03	84.634	07/23/02	04:24:03	66.035	07/23/02	05:30:03	81.335
07/23/02	02:13:03	79.401	07/23/02	03:19:03	84.691	07/23/02	04:25:03	93.109	07/23/02	05:31:03	81.534
07/23/02	02:14:03	80.482	07/23/02	03:20:03	85.117	07/23/02	04:26:03	78.008	07/23/02	05:32:03	81.050
07/23/02	02:15:03	80.396	07/23/02	03:21:03	84.861	07/23/02	04:27:03	81.961	07/23/02	05:33:03	81.961
07/23/02	02:16:03	80.055	07/23/02	03:22:03	84.861	07/23/02	04:28:03	82.529	07/23/02	05:34:03	81.505
07/23/02	02:17:03	101.413	07/23/02	03:23:03	85.003	07/23/02	04:29:03	81.193	07/23/02	05:35:03	81.335
07/23/02	02:18:03	84.577	07/23/02	03:24:03	84.548	07/23/02	04:30:03	82.643	07/23/02	05:36:03	81.591
07/23/02	02:19:03	84.406	07/23/02	03:25:03	85.402	07/23/02	04:31:03	81.733	07/23/02	05:37:03	81.875
07/23/02	02:20:03	84.776	07/23/02	03:26:03	85.146	07/23/02	04:32:03	82.586	07/23/02	05:38:03	80.738
07/23/02	02:21:03	84.548	07/23/02	03:27:03	84.975	07/23/02	04:33:03	82.074	07/23/02	05:39:03	81.449
07/23/02	02:22:03	84.150	07/23/02	03:28:03	85.430	07/23/02	04:34:03	82.529	07/23/02	05:40:03	82.245
07/23/02	02:23:03	84.918	07/23/02	03:29:03	85.146	07/23/02	04:35:03	82.103	07/23/02	05:41:03	80.738
07/23/02	02:24:03	85.430	07/23/02	03:30:03	85.345	07/23/02	04:36:03	81.335	07/23/02	05:42:03	82.359
07/23/02	02:25:03	84.719	07/23/02	03:31:03	84.833	07/23/02	04:37:03	81.733	07/23/02	05:43:03	81.164
07/23/02	02:26:03	84.861	07/23/02	03:32:03	85.430	07/23/02	04:38:03	81.449	07/23/02	05:44:03	80.595
07/23/02	02:27:03	84.634	07/23/02	03:33:03	84.634	07/23/02	04:39:03	81.250	07/23/02	05:45:03	80.340
07/23/02	02:28:03	84.776	07/23/02	03:34:03	85.430	07/23/02	04:40:03	81.818	07/23/02	05:46:03	81.733
07/23/02	02:29:03	85.259	07/23/02	03:35:03	85.402	07/23/02	04:41:03	81.961	07/23/02	05:47:03	81.648
07/23/02	02:30:03	85.857	07/23/02	03:36:03	85.629	07/23/02	04:42:03	82.017	07/23/02	05:48:03	81.306
07/23/02	02:31:03	84.719	07/23/02	03:37:03	85.487	07/23/02	04:43:03	81.818	07/23/02	05:49:03	80.738
07/23/02	02:32:03	84.548	07/23/02	03:38:03	85.544	07/23/02	04:44:03	82.586	07/23/02	05:50:03	81.449
07/23/02	02:33:03	84.691	07/23/02	03:39:03	85.913	07/23/02	04:45:03	81.449	07/23/02	05:51:03	80.254
07/23/02	02:34:03	84.975	07/23/02	03:40:03	85.857	07/23/02	04:46:03	81.818	07/23/02	05:52:03	82.216

GIRARD AND EARLE - NO. 7552 cont.

Date	Time	Pres (PSI)
07/23/02	05:53:03	81.050
07/23/02	05:54:03	80.880
07/23/02	05:55:03	82.103
07/23/02	05:56:03	80.766
07/23/02	05:57:03	81.505
07/23/02	05:58:03	80.965
07/23/02	05:59:03	81.335
07/23/02	06:00:03	80.908
07/23/02	06:01:03	81.961
07/23/02	06:02:03	80.766
07/23/02	06:03:03	80.055
07/23/02	06:04:03	82.302
07/23/02	06:05:03	80.453
07/23/02	06:06:03	81.050
07/23/02	06:07:03	80.738
07/23/02	06:08:03	80.738
07/23/02	06:09:03	80.254
07/23/02	06:10:03	81.335
07/23/02	06:11:03	81.164
07/23/02	06:12:03	79.913
07/23/02	06:13:03	80.681
07/23/02	06:14:03	80.539
07/23/02	06:15:03	80.766
07/23/02	06:16:03	80.595
07/23/02	06:17:03	81.534
07/23/02	06:18:03	80.027
07/23/02	06:19:03	80.880
07/23/02	06:20:03	80.027
07/23/02	06:21:03	81.392
07/23/02	06:22:03	79.913
07/23/02	06:23:03	80.340
07/23/02	06:24:03	80.766
07/23/02	06:25:03	81.193
07/23/02	06:26:03	79.884
07/23/02	06:27:03	80.482
07/23/02	06:28:03	80.396
07/23/02	06:29:03	81.733
07/23/02	06:30:03	80.453
07/23/02	06:31:03	79.458
07/23/02	06:32:03	82.103
07/23/02	06:33:03	80.482
07/23/02	06:34:03	80.539
07/23/02	06:35:03	80.340
07/23/02	06:36:03	80.169
07/23/02	06:37:03	80.112
07/23/02	06:38:03	80.027
07/23/02	06:39:03	79.884
07/23/02	06:40:03	80.340
07/23/02	06:41:03	79.970
07/23/02	06:42:03	79.401
07/23/02	06:43:03	80.311
07/23/02	06:44:03	79.884
07/23/02	06:45:03	81.022
07/23/02	06:46:03	79.401
07/23/02	06:47:03	79.202
07/23/02	06:48:03	79.913
07/23/02	06:49:03	79.401
07/23/02	06:50:03	78.775
07/23/02	06:51:03	79.486
07/23/02	06:52:03	79.316
07/23/02	06:53:03	79.629
07/23/02	06:54:03	80.169
07/23/02	06:55:03	78.889
07/23/02	06:56:03	80.482
07/23/02	06:57:03	80.453
07/23/02	06:58:03	79.060
07/23/02	06:59:03	79.316
07/23/02	07:00:03	78.974
07/23/02	07:01:03	78.491
07/23/02	07:02:03	79.486
07/23/02	07:03:03	78.918
07/23/02	07:04:03	80.112
07/23/02	07:05:03	79.685
07/23/02	07:06:03	80.197
07/23/02	07:07:03	79.259
07/23/02	07:08:03	79.629
07/23/02	07:09:03	78.605
07/23/02	07:10:03	79.685
07/23/02	07:11:03	79.543
07/23/02	07:12:03	78.747
07/23/02	07:13:03	78.918
07/23/02	07:14:03	79.401
07/23/02	07:15:03	79.202
07/23/02	07:16:03	80.112
07/23/02	07:17:03	78.775
07/23/02	07:18:03	79.344
07/23/02	07:19:03	78.832
07/23/02	07:20:03	78.491
07/23/02	07:21:03	79.600
07/23/02	07:22:03	78.207
07/23/02	07:23:03	78.121
07/23/02	07:24:03	79.771
07/23/02	07:25:03	79.828
07/23/02	07:26:03	84.349
07/23/02	07:27:03	80.027
07/23/02	07:28:03	79.913
07/23/02	07:29:03	81.875
07/23/02	07:30:03	82.359
07/23/02	07:31:03	79.884
07/23/02	07:32:03	79.771
07/23/02	07:33:03	80.766
07/23/02	07:34:03	81.335
07/23/02	07:35:03	81.164
07/23/02	07:36:03	80.254
07/23/02	07:37:03	80.738
07/23/02	07:38:03	82.501
07/23/02	07:39:03	80.197
07/23/02	07:40:03	80.595
07/23/02	07:41:03	81.022
07/23/02	07:42:03	80.453
07/23/02	07:43:03	80.624
07/23/02	07:44:03	81.250
07/23/02	07:45:03	80.453
07/23/02	07:46:03	81.050
07/23/02	07:47:03	81.591
07/23/02	07:48:03	80.766
07/23/02	07:49:03	80.624
07/23/02	07:50:03	81.306
07/23/02	07:51:03	81.050
07/23/02	07:52:03	81.050
07/23/02	07:53:03	81.790
07/23/02	07:54:03	81.022
07/23/02	07:55:03	80.908
07/23/02	07:56:03	80.738
07/23/02	07:57:03	81.250
07/23/02	07:58:03	81.790
07/23/02	07:59:03	81.306
07/23/02	08:00:03	81.648
07/23/02	08:01:03	81.193
07/23/02	08:02:03	82.074
07/23/02	08:03:03	81.505
07/23/02	08:04:03	79.771
07/23/02	08:05:03	81.818
07/23/02	08:06:03	80.055
07/23/02	08:07:03	81.022
07/23/02	08:08:03	79.913
07/23/02	08:09:03	80.112
07/23/02	08:10:03	80.965
07/23/02	08:11:03	81.050
07/23/02	08:12:03	80.766
07/23/02	08:13:03	80.880
07/23/02	08:14:03	80.965
07/23/02	08:15:03	80.396
07/23/02	08:16:03	80.112
07/23/02	08:17:03	81.505
07/23/02	08:18:03	80.681
07/23/02	08:19:03	80.624
07/23/02	08:20:03	80.624
07/23/02	08:21:03	80.823
07/23/02	08:22:03	81.164
07/23/02	08:23:03	80.482
07/23/02	08:24:03	82.103
07/23/02	08:25:03	80.766
07/23/02	08:26:03	80.539
07/23/02	08:27:03	80.539
07/23/02	08:28:03	80.624
07/23/02	08:29:03	81.961
07/23/02	08:30:03	79.742
07/23/02	08:31:03	80.396
07/23/02	08:32:03	81.164
07/23/02	08:33:03	80.823
07/23/02	08:34:03	80.396
07/23/02	08:35:03	80.908
07/23/02	08:36:03	80.880
07/23/02	08:37:03	80.766
07/23/02	08:38:03	80.880
07/23/02	08:39:03	81.392
07/23/02	08:40:03	80.311
07/23/02	08:41:03	80.396
07/23/02	08:42:03	81.534
07/23/02	08:43:03	80.908
07/23/02	08:44:03	80.823
07/23/02	08:45:03	81.164
07/23/02	08:46:03	80.396
07/23/02	08:47:03	81.193
07/23/02	08:48:03	81.648
07/23/02	08:49:03	80.965
07/23/02	08:50:03	80.539
07/23/02	08:51:03	82.871
07/23/02	08:52:03	82.245
07/23/02	08:53:03	81.306
07/23/02	08:54:03	82.103
07/23/02	08:55:03	81.449
07/23/02	08:56:03	82.671
07/23/02	08:57:03	82.074
07/23/02	08:58:03	82.728
07/23/02	08:59:03	82.216
07/23/02	09:00:03	81.676
07/23/02	09:01:03	81.790
07/23/02	09:02:03	82.074
07/23/02	09:03:03	80.908
07/23/02	09:04:03	81.505
07/23/02	09:05:03	81.648
07/23/02	09:06:03	81.875
07/23/02	09:07:03	80.624
07/23/02	09:08:03	82.245
07/23/02	09:09:03	81.250
07/23/02	09:10:03	81.306
07/23/02	09:11:03	81.790
07/23/02	09:12:03	82.074
07/23/02	09:13:03	82.216
07/23/02	09:14:03	81.392
07/23/02	09:15:03	81.392
07/23/02	09:16:03	82.501
07/23/02	09:17:03	81.818
07/23/02	09:18:03	81.875
07/23/02	09:19:03	81.022
07/23/02	09:20:03	81.932
07/23/02	09:21:03	82.814
07/23/02	09:22:03	82.160
07/23/02	09:23:03	81.193
07/23/02	09:24:03	81.961
07/23/02	09:25:03	82.103
07/23/02	09:26:03	81.875
07/23/02	09:27:03	81.449
07/23/02	09:28:03	82.017
07/23/02	09:29:03	81.591
07/23/02	09:30:03	83.070
07/23/02	09:31:03	81.932
07/23/02	09:32:03	82.074
07/23/02	09:33:03	81.392
07/23/02	09:34:03	81.961
07/23/02	09:35:03	82.671
07/23/02	09:36:03	81.790
07/23/02	09:37:03	81.648
07/23/02	09:38:03	82.074
07/23/02	09:39:03	82.302
07/23/02	09:40:03	81.449
07/23/02	09:41:03	82.814
07/23/02	09:42:03	82.501
07/23/02	09:43:03	81.932
07/23/02	09:44:03	82.671
07/23/02	09:45:03	82.017
07/23/02	09:46:03	82.444
07/23/02	09:47:03	82.359
07/23/02	09:48:03	81.392
07/23/02	09:49:03	82.444
07/23/02	09:50:03	81.505
07/23/02	09:51:03	82.245
07/23/02	09:52:03	81.875
07/23/02	09:53:03	82.956
07/23/02	09:54:03	81.193
07/23/02	09:55:03	81.676
07/23/02	09:56:03	83.155
07/23/02	09:57:03	83.013
07/23/02	09:58:03	82.387
07/23/02	09:59:03	80.908
07/23/02	10:00:03	81.961
07/23/02	10:01:03	81.306
07/23/02	10:02:03	81.676
07/23/02	10:03:03	81.818
07/23/02	10:04:03	83.240
07/23/02	10:05:03	81.505
07/23/02	10:06:03	82.586
07/23/02	10:07:03	81.250
07/23/02	10:08:03	82.302
07/23/02	10:09:03	81.676
07/23/02	10:10:03	81.648
07/23/02	10:11:03	81.676
07/23/02	10:12:03	82.245
07/23/02	10:13:03	81.733
07/23/02	10:14:03	82.814
07/23/02	10:15:03	81.961
07/23/02	10:16:03	82.927

GIRARD AND EARLE - NO. 7552 cont.

Date	Time	Pres (PSI)
07/23/02	10:17:03	81.875
07/23/02	10:18:03	81.306
07/23/02	10:19:03	82.387
07/23/02	10:20:03	81.932
07/23/02	10:21:03	82.444
07/23/02	10:22:03	81.932
07/23/02	10:23:03	83.212
07/23/02	10:24:03	82.160
07/23/02	10:25:03	81.818
07/23/02	10:26:03	82.103
07/23/02	10:27:03	82.359
07/23/02	10:28:03	80.965
07/23/02	10:29:03	82.216
07/23/02	10:30:03	82.444
07/23/02	10:31:03	81.961
07/23/02	10:32:03	82.216
07/23/02	10:33:03	82.103
07/23/02	10:34:03	81.107
07/23/02	10:35:03	81.818
07/23/02	10:36:03	81.875
07/23/02	10:37:03	82.103
07/23/02	10:38:03	81.676
07/23/02	10:39:03	80.595
07/23/02	10:40:03	82.160
07/23/02	10:41:03	82.074
07/23/02	10:42:03	81.733
07/23/02	10:43:03	81.790
07/23/02	10:44:03	82.529
07/23/02	10:45:03	82.927
07/23/02	10:46:03	82.529
07/23/02	10:47:03	81.676
07/23/02	10:48:03	81.733
07/23/02	10:49:03	82.359
07/23/02	10:50:03	76.642
07/23/02	10:51:03	81.505
07/23/02	10:52:03	82.444
07/23/02	10:53:03	82.302
07/23/02	10:54:03	82.529
07/23/02	10:55:03	82.444
07/23/02	10:56:03	79.771
07/23/02	10:57:03	80.965
07/23/02	10:58:03	79.771
07/23/02	10:59:03	80.738
07/23/02	11:00:03	81.449
07/23/02	11:01:03	80.681
07/23/02	11:02:03	66.234
07/23/02	11:03:03	74.965
07/23/02	11:04:03	72.633
07/23/02	11:05:03	72.689
07/23/02	11:06:03	72.547
07/23/02	11:07:03	72.974
07/23/02	11:08:03	72.320
07/23/02	11:09:03	72.035
07/23/02	11:10:03	71.268
07/23/02	11:11:03	71.609
07/23/02	11:12:03	72.633
07/23/02	11:13:03	72.689
07/23/02	11:14:03	72.263
07/23/02	11:15:03	71.836
07/23/02	11:16:03	72.348
07/23/02	11:17:03	72.206
07/23/02	11:18:03	72.945
07/23/02	11:19:03	73.400
07/23/02	11:20:03	73.088
07/23/02	11:21:03	75.448
07/23/02	11:22:03	79.060
07/23/02	11:23:03	78.633
07/23/02	11:24:03	79.600
07/23/02	11:25:03	79.486
07/23/02	11:26:03	80.027
07/23/02	11:27:03	79.458
07/23/02	11:28:03	79.685
07/23/02	11:29:03	79.486
07/23/02	11:30:03	81.050
07/23/02	11:31:03	79.344
07/23/02	11:32:03	78.974
07/23/02	11:33:03	79.174
07/23/02	11:34:03	78.121
07/23/02	11:35:03	79.458
07/23/02	11:36:03	78.605
07/23/02	11:37:03	79.174
07/23/02	11:38:03	79.259
07/23/02	11:39:03	79.316
07/23/02	11:40:03	80.112
07/23/02	11:41:03	79.771
07/23/02	11:42:03	78.434
07/23/02	11:43:03	79.685
07/23/02	11:44:03	79.685
07/23/02	11:45:03	78.974
07/23/02	11:46:03	80.112
07/23/02	11:47:03	78.690
07/23/02	11:48:03	78.889
07/23/02	11:49:03	78.974
07/23/02	11:50:03	79.202
07/23/02	11:51:03	79.486
07/23/02	11:52:03	79.031
07/23/02	11:53:03	79.828
07/23/02	11:54:03	81.733
07/23/02	11:55:03	80.453
07/23/02	11:56:03	80.453
07/23/02	11:57:03	80.055
07/23/02	11:58:03	80.340
07/23/02	11:59:03	80.595
07/23/02	12:00:03	81.306
07/23/02	12:01:03	79.685
07/23/02	12:02:03	80.539
07/23/02	12:03:03	80.624
07/23/02	12:04:03	79.970
07/23/02	12:05:03	80.539
07/23/02	12:06:03	80.112
07/23/02	12:07:03	80.624
07/23/02	12:08:03	71.694
07/23/02	12:09:03	76.074
07/23/02	12:10:03	75.704
07/23/02	12:11:03	75.363
07/23/02	12:12:03	75.875
07/23/02	12:13:03	75.221
07/23/02	12:14:03	75.505
07/23/02	12:15:03	74.965
07/23/02	12:16:03	74.538
07/23/02	12:17:03	82.814
07/23/02	12:18:03	80.112
07/23/02	12:19:03	81.505
07/23/02	12:20:03	80.880
07/23/02	12:21:03	80.311
07/23/02	12:22:03	81.107
07/23/02	12:23:03	80.595
07/23/02	12:24:03	79.970
07/23/02	12:25:03	80.027
07/23/02	12:26:03	81.449
07/23/02	12:27:03	81.818
07/23/02	12:28:03	81.050
07/23/02	12:29:03	80.539
07/23/02	12:30:03	80.681
07/23/02	12:31:03	80.340
07/23/02	12:32:03	82.103
07/23/02	12:33:03	83.013
07/23/02	12:34:03	85.430
07/23/02	12:35:03	84.065
07/23/02	12:36:03	84.093
07/23/02	12:37:03	85.345
07/23/02	12:38:03	84.861
07/23/02	12:39:03	85.345
07/23/02	12:40:03	84.776
07/23/02	12:41:03	85.402
07/23/02	12:42:03	84.918
07/23/02	12:43:03	84.833
07/23/02	12:44:03	85.117
07/23/02	12:45:03	84.975
07/23/02	12:46:03	85.402
07/23/02	12:47:03	85.402
07/23/02	12:48:03	85.771
07/23/02	12:49:03	85.487
07/23/02	12:50:03	84.150
07/23/02	12:51:03	85.345
07/23/02	12:52:03	85.203
07/23/02	12:53:03	85.771
07/23/02	12:54:03	85.686
07/23/02	12:55:03	85.345
07/23/02	12:56:03	85.828
07/23/02	12:57:03	85.402
07/23/02	12:58:03	84.833
07/23/02	12:59:03	85.487
07/23/02	13:00:03	86.994
07/23/02	13:01:03	85.430
07/23/02	13:02:03	85.402
07/23/02	13:03:03	85.999
07/23/02	13:04:03	85.003
07/23/02	13:05:03	85.771
07/23/02	13:06:03	85.430
07/23/02	13:07:03	84.833
07/23/02	13:08:03	84.719
07/23/02	13:09:03	84.861
07/23/02	13:10:03	84.548
07/23/02	13:11:03	85.146
07/23/02	13:12:03	85.999
07/23/02	13:13:03	84.861
07/23/02	13:14:03	84.833
07/23/02	13:15:03	85.345
07/23/02	13:16:03	85.345
07/23/02	13:17:03	85.203
07/23/02	13:18:03	84.150
07/23/02	13:19:03	83.297
07/23/02	13:20:03	84.833
07/23/02	13:21:03	85.345
07/23/02	13:22:03	85.003
07/23/02	13:23:03	85.430
07/23/02	13:24:03	85.572
07/23/02	13:25:03	85.714
07/23/02	13:26:03	85.828
07/23/02	13:27:03	84.577
07/23/02	13:28:03	85.714
07/23/02	13:29:03	84.833
07/23/02	13:30:03	85.146
07/23/02	13:31:03	85.686
07/23/02	13:32:03	85.714
07/23/02	13:33:03	84.861
07/23/02	13:34:03	84.918
07/23/02	13:35:03	85.003
07/23/02	13:36:03	84.833
07/23/02	13:37:03	85.259
07/23/02	13:38:03	85.430
07/23/02	13:39:03	84.548
07/23/02	13:40:03	85.714
07/23/02	13:41:03	84.548
07/23/02	13:42:03	85.288
07/23/02	13:43:03	84.918
07/23/02	13:44:03	85.060
07/23/02	13:45:03	84.691
07/23/02	13:46:03	85.288
07/23/02	13:47:03	85.828
07/23/02	13:48:03	85.345
07/23/02	13:49:03	84.719
07/23/02	13:50:03	86.283
07/23/02	13:51:03	85.430
07/23/02	13:52:03	85.487
07/23/02	13:53:03	86.681
07/23/02	13:54:03	84.492
07/23/02	13:55:03	85.430
07/23/02	13:56:03	85.003
07/23/02	13:57:03	85.288
07/23/02	13:58:03	85.288
07/23/02	13:59:03	85.259
07/23/02	14:00:03	85.146
07/23/02	14:01:03	85.259
07/23/02	14:02:03	85.913
07/23/02	14:03:03	84.861
07/23/02	14:04:03	85.060
07/23/02	14:05:03	85.203
07/23/02	14:06:03	85.288
07/23/02	14:07:03	86.198
07/23/02	14:08:03	84.776
07/23/02	14:09:03	85.288
07/23/02	14:10:03	85.003
07/23/02	14:11:03	84.776
07/23/02	14:12:03	85.487
07/23/02	14:13:03	85.402
07/23/02	14:14:03	86.056
07/23/02	14:15:03	85.345
07/23/02	14:16:03	86.141
07/23/02	14:17:03	85.259
07/23/02	14:18:03	85.146
07/23/02	14:19:03	85.402
07/23/02	14:20:03	86.056
07/23/02	14:21:03	84.435
07/23/02	14:22:03	85.913
07/23/02	14:23:03	85.003
07/23/02	14:24:03	84.691
07/23/02	14:25:03	85.288
07/23/02	14:26:03	85.345
07/23/02	14:27:03	84.975
07/23/02	14:28:03	85.117
07/23/02	14:29:03	85.629
07/23/02	14:30:03	85.828
07/23/02	14:31:03	86.113
07/23/02	14:32:03	85.714
07/23/02	14:33:03	85.544
07/23/02	14:34:03	85.857
07/23/02	14:35:03	85.714
07/23/02	14:36:03	86.909
07/23/02	14:37:03	85.970
07/23/02	14:38:03	85.970
07/23/02	14:39:03	85.430
07/23/02	14:40:03	85.487

GIRARD AND EARLE - NO. 7552 cont.

Date	Time	Pres (PSI)
07/23/02	14:41:03	84.406
07/23/02	14:42:03	81.505
07/23/02	14:43:03	81.392
07/23/02	14:44:03	72.945
07/23/02	14:45:03	69.362
07/23/02	14:46:03	68.082
07/23/02	14:47:03	67.855
07/23/02	14:48:03	67.229
07/23/02	14:49:03	68.026
07/23/02	14:50:03	67.656
07/23/02	14:51:03	68.082
07/23/02	14:52:03	67.713
07/23/02	14:53:03	67.741
07/23/02	14:54:03	68.310
07/23/02	14:55:03	68.452
07/23/02	14:56:03	66.888
07/23/02	14:57:03	67.087
07/23/02	14:58:03	67.457
07/23/02	14:59:03	66.604
07/23/02	15:00:03	67.144
07/23/02	15:01:03	66.888
07/23/02	15:02:03	68.281
07/23/02	15:03:03	67.514
07/23/02	15:04:03	66.888
07/23/02	15:05:03	76.074
07/23/02	15:06:03	84.150
07/23/02	15:07:03	79.117
07/23/02	15:08:03	81.107
07/23/02	15:09:03	79.970
07/23/02	15:10:03	79.031
07/23/02	15:11:03	80.766
07/23/02	15:12:03	80.453
07/23/02	15:13:03	80.766
07/23/02	15:14:03	80.311
07/23/02	15:15:03	79.884
07/23/02	15:16:03	80.340
07/23/02	15:17:03	79.828
07/23/02	15:18:03	80.340
07/23/02	15:19:03	79.685
07/23/02	15:20:03	78.775
07/23/02	15:21:03	80.055
07/23/02	15:22:03	79.629
07/23/02	15:23:03	80.254
07/23/02	15:24:03	80.055
07/23/02	15:25:03	80.595
07/23/02	15:26:03	79.117
07/23/02	15:27:03	80.738
07/23/02	15:28:03	79.259
07/23/02	15:29:03	79.202
07/23/02	15:30:03	80.595
07/23/02	15:31:03	80.681
07/23/02	15:32:03	59.608
07/23/02	15:33:03	58.470
07/23/02	15:34:03	57.901
07/23/02	15:35:03	58.299
07/23/02	15:36:03	58.897
07/23/02	15:37:03	58.954
07/23/02	15:38:03	59.465
07/23/02	15:39:03	58.299
07/23/02	15:40:03	58.328
07/23/02	15:41:03	58.954
07/23/02	15:42:03	58.243
07/23/02	15:43:03	58.669
07/23/02	15:44:03	58.044
07/23/02	15:45:03	57.759
07/23/02	15:46:03	56.963
07/23/02	15:47:03	57.617
07/23/02	15:48:03	57.617
07/23/02	15:49:03	57.958
07/23/02	15:50:03	58.100
07/23/02	15:51:03	63.219
07/23/02	15:52:03	77.410
07/23/02	15:53:03	79.600
07/23/02	15:54:03	95.270
07/23/02	15:55:03	87.307
07/23/02	15:56:03	86.568
07/23/02	15:57:03	87.051
07/23/02	15:58:03	86.966
07/23/02	15:59:03	86.824
07/23/02	16:00:03	87.108
07/23/02	16:01:03	86.767
07/23/02	16:02:03	86.852
07/23/02	16:03:03	85.771
07/23/02	16:04:03	86.397
07/23/02	16:05:03	86.539
07/23/02	16:06:03	86.340
07/23/02	16:07:03	86.966
07/23/02	16:08:03	86.852
07/23/02	16:09:03	86.710
07/23/02	16:10:03	87.051
07/23/02	16:11:03	87.762
07/23/02	16:12:03	87.876
07/23/02	16:13:03	86.966
07/23/02	16:14:03	87.108
07/23/02	16:15:03	86.255
07/23/02	16:16:03	86.824
07/23/02	16:17:03	57.759
07/23/02	16:18:03	88.615
07/23/02	16:19:03	78.918
07/23/02	16:20:03	78.491
07/23/02	16:21:03	82.501
07/23/02	16:22:03	78.548
07/23/02	16:23:03	80.880
07/23/02	16:24:03	79.913
07/23/02	16:25:03	80.482
07/23/02	16:26:03	79.771
07/23/02	16:27:03	80.197
07/23/02	16:28:03	79.117
07/23/02	16:29:03	79.685
07/23/02	16:30:03	80.311
07/23/02	16:31:03	80.340
07/23/02	16:32:03	100.076
07/23/02	16:33:03	85.857
07/23/02	16:34:03	84.776
07/23/02	16:35:03	85.203
07/23/02	16:36:03	84.634
07/23/02	16:37:03	85.430
07/23/02	16:38:03	85.345
07/23/02	16:39:03	85.203
07/23/02	16:40:03	84.292
07/23/02	16:41:03	85.146
07/23/02	16:42:03	84.975
07/23/02	16:43:03	84.776
07/23/02	16:44:03	85.970
07/23/02	16:45:03	84.207
07/23/02	16:46:03	85.146
07/23/02	16:47:03	85.003
07/23/02	16:48:03	85.203
07/23/02	16:49:03	84.548
07/23/02	16:50:03	85.259
07/23/02	16:51:03	84.577
07/23/02	16:52:03	84.691
07/23/02	16:53:03	84.435
07/23/02	16:54:03	85.146
07/23/02	16:55:03	84.577
07/23/02	16:56:03	83.382
07/23/02	16:57:03	83.667
07/23/02	16:58:03	84.406
07/23/02	16:59:03	84.008
07/23/02	17:00:03	84.577
07/23/02	17:01:03	84.918
07/23/02	17:02:03	84.833
07/23/02	17:03:03	84.975
07/23/02	17:04:03	84.435
07/23/02	17:05:03	84.776
07/23/02	17:06:03	84.577
07/23/02	17:07:03	84.577
07/23/02	17:08:03	84.065
07/23/02	17:09:03	84.236
07/23/02	17:10:03	84.150
07/23/02	17:11:03	84.975
07/23/02	17:12:03	83.212
07/23/02	17:13:03	84.292
07/23/02	17:14:03	84.634
07/23/02	17:15:03	84.548
07/23/02	17:16:03	84.492
07/23/02	17:17:03	84.065
07/23/02	17:18:03	84.634
07/23/02	17:19:03	84.861
07/23/02	17:20:03	84.349
07/23/02	17:21:03	84.292
07/23/02	17:22:03	84.207
07/23/02	17:23:03	84.719
07/23/02	17:24:03	84.776
07/23/02	17:25:03	83.525
07/23/02	17:26:03	83.923
07/23/02	17:27:03	84.150
07/23/02	17:28:03	84.236
07/23/02	17:29:03	84.833
07/23/02	17:30:03	84.150
07/23/02	17:31:03	84.150
07/23/02	17:32:03	84.975
07/23/02	17:33:03	84.691
07/23/02	17:34:03	83.809
07/23/02	17:35:03	84.236
07/23/02	17:36:03	84.207
07/23/02	17:37:03	84.634
07/23/02	17:38:03	85.003
07/23/02	17:39:03	84.236
07/23/02	17:40:03	83.809
07/23/02	17:41:03	83.809
07/23/02	17:42:03	85.259
07/23/02	17:43:03	84.065
07/23/02	17:44:03	84.492
07/23/02	17:45:03	83.354
07/23/02	17:46:03	84.292
07/23/02	17:47:03	84.691
07/23/02	17:48:03	84.492
07/23/02	17:49:03	84.292
07/23/02	17:50:03	84.236
07/23/02	17:51:03	84.634
07/23/02	17:52:03	84.292
07/23/02	17:53:03	84.349
07/23/02	17:54:03	84.719
07/23/02	17:55:03	84.719
07/23/02	17:56:03	83.923
07/23/02	17:57:03	84.150
07/23/02	17:58:03	84.634
07/23/02	17:59:03	84.634
07/23/02	18:00:03	84.548
07/23/02	18:01:03	84.577
07/23/02	18:02:03	85.003
07/23/02	18:03:03	83.297
07/23/02	18:04:03	84.435
07/23/02	18:05:03	84.833
07/23/02	18:06:03	83.866
07/23/02	18:07:03	84.975
07/23/02	18:08:03	83.638
07/23/02	18:09:03	84.492
07/23/02	18:10:03	84.008
07/23/02	18:11:03	83.781
07/23/02	18:12:03	84.406
07/23/02	18:13:03	84.008
07/23/02	18:14:03	84.065
07/23/02	18:15:03	84.292
07/23/02	18:16:03	84.918
07/23/02	18:17:03	84.292
07/23/02	18:18:03	83.809
07/23/02	18:19:03	84.548
07/23/02	18:20:03	84.861
07/23/02	18:21:03	84.349
07/23/02	18:22:03	85.345
07/23/02	18:23:03	84.918
07/23/02	18:24:03	85.117
07/23/02	18:25:03	84.833
07/23/02	18:26:03	84.861
07/23/02	18:27:03	84.691
07/23/02	18:28:03	84.719
07/23/02	18:29:03	85.259
07/23/02	18:30:03	85.487
07/23/02	18:31:03	85.288
07/23/02	18:32:03	84.577
07/23/02	18:33:03	84.349
07/23/02	18:34:03	85.430
07/23/02	18:35:03	84.634
07/23/02	18:36:03	83.951
07/23/02	18:37:03	85.146
07/23/02	18:38:03	85.288
07/23/02	18:39:03	85.146
07/23/02	18:40:03	85.146
07/23/02	18:41:03	84.975
07/23/02	18:42:03	84.975
07/23/02	18:43:03	85.117
07/23/02	18:44:03	84.918
07/23/02	18:45:03	84.975
07/23/02	18:46:03	85.203
07/23/02	18:47:03	85.345
07/23/02	18:48:03	85.857
07/23/02	18:49:03	84.634
07/23/02	18:50:03	84.577
07/23/02	18:51:03	85.714
07/23/02	18:52:03	84.492
07/23/02	18:53:03	84.833
07/23/02	18:54:03	86.198
07/23/02	18:55:03	85.857
07/23/02	18:56:03	86.340
07/23/02	18:57:03	85.117
07/23/02	18:58:03	85.203
07/23/02	18:59:03	85.146
07/23/02	19:00:03	84.833
07/23/02	19:01:03	84.207
07/23/02	19:02:03	85.487
07/23/02	19:03:03	84.349
07/23/02	19:04:03	84.236

GIRARD AND EARLE - NO. 7552 cont.

Date	Time	Pres (PSI)
07/23/02	19:05:03	85.828
07/23/02	19:06:03	84.349
07/23/02	19:07:03	85.345
07/23/02	19:08:03	84.918
07/23/02	19:09:03	84.861
07/23/02	19:10:03	85.146
07/23/02	19:11:03	85.629
07/23/02	19:12:03	84.776
07/23/02	19:13:03	84.548
07/23/02	19:14:03	84.207
07/23/02	19:15:03	85.003
07/23/02	19:16:03	84.918
07/23/02	19:17:03	84.975
07/23/02	19:18:03	86.283
07/23/02	19:19:03	85.259
07/23/02	19:20:03	85.857
07/23/02	19:21:03	85.259
07/23/02	19:22:03	85.487
07/23/02	19:23:03	84.207
07/23/02	19:24:03	84.833
07/23/02	19:25:03	85.572
07/23/02	19:26:03	84.833
07/23/02	19:27:03	84.548
07/23/02	19:28:03	84.349
07/23/02	19:29:03	85.771
07/23/02	19:30:03	85.345
07/23/02	19:31:03	85.771
07/23/02	19:32:03	84.548
07/23/02	19:33:03	85.288
07/23/02	19:34:03	85.203
07/23/02	19:35:03	85.203
07/23/02	19:36:03	84.065
07/23/02	19:37:03	85.203
07/23/02	19:38:03	85.487
07/23/02	19:39:03	84.918
07/23/02	19:40:03	85.970
07/23/02	19:41:03	85.828
07/23/02	19:42:03	85.146
07/23/02	19:43:03	85.003
07/23/02	19:44:03	85.146
07/23/02	19:45:03	84.918
07/23/02	19:46:03	85.970
07/23/02	19:47:03	85.771
07/23/02	19:48:03	84.776
07/23/02	19:49:03	86.056
07/23/02	19:50:03	85.430
07/23/02	19:51:03	85.629
07/23/02	19:52:03	85.487
07/23/02	19:53:03	85.288
07/23/02	19:54:03	84.833
07/23/02	19:55:03	85.203
07/23/02	19:56:03	84.207
07/23/02	19:57:03	84.776
07/23/02	19:58:03	85.003
07/23/02	19:59:03	84.577
07/23/02	20:00:03	85.402
07/23/02	20:01:03	84.435
07/23/02	20:02:03	85.629
07/23/02	20:03:03	85.828
07/23/02	20:04:03	85.402
07/23/02	20:05:03	85.771
07/23/02	20:06:03	85.629
07/23/02	20:07:03	86.141
07/23/02	20:08:03	85.544
07/23/02	20:09:03	85.117
07/23/02	20:10:03	85.487
07/23/02	20:11:03	85.487
07/23/02	20:12:03	85.402
07/23/02	20:13:03	84.634
07/23/02	20:14:03	85.203
07/23/02	20:15:03	85.402
07/23/02	20:16:03	84.776
07/23/02	20:17:03	85.203
07/23/02	20:18:03	84.861
07/23/02	20:19:03	84.918
07/23/02	20:20:03	85.288
07/23/02	20:21:03	84.918
07/23/02	20:22:03	85.970
07/23/02	20:23:03	85.572
07/23/02	20:24:03	85.430
07/23/02	20:25:03	85.003
07/23/02	20:26:03	84.918
07/23/02	20:27:03	85.259
07/23/02	20:28:03	85.203
07/23/02	20:29:03	85.487
07/23/02	20:30:03	85.999
07/23/02	20:31:03	85.857
07/23/02	20:32:03	85.117
07/23/02	20:33:03	85.487
07/23/02	20:34:03	86.056
07/23/02	20:35:03	85.544
07/23/02	20:36:03	84.207
07/23/02	20:37:03	85.828
07/23/02	20:38:03	85.203
07/23/02	20:39:03	85.828
07/23/02	20:40:03	85.203
07/23/02	20:41:03	84.833
07/23/02	20:42:03	86.056
07/23/02	20:43:03	85.288
07/23/02	20:44:03	85.913
07/23/02	20:45:03	85.970
07/23/02	20:46:03	85.686
07/23/02	20:47:03	85.487
07/23/02	20:48:03	86.056
07/23/02	20:49:03	85.430
07/23/02	20:50:03	85.487
07/23/02	20:51:03	85.572
07/23/02	20:52:03	85.629
07/23/02	20:53:03	86.255
07/23/02	20:54:03	87.051
07/23/02	20:55:03	85.857
07/23/02	20:56:03	86.056
07/23/02	20:57:03	69.902
07/23/02	20:58:03	82.785
07/23/02	20:59:03	82.444
07/23/02	21:00:03	80.624
07/23/02	21:01:03	80.055
07/23/02	21:02:03	80.908
07/23/02	21:03:03	81.022
07/23/02	21:04:03	80.624
07/23/02	21:05:03	80.681
07/23/02	21:06:03	81.591
07/23/02	21:07:03	80.823
07/23/02	21:08:03	81.392
07/23/02	21:09:03	80.624
07/23/02	21:10:03	81.449
07/23/02	21:11:03	82.927
07/23/02	21:12:03	80.396
07/23/02	21:13:03	81.818
07/23/02	21:14:03	80.738
07/23/02	21:15:03	80.453
07/23/02	21:16:03	80.539
07/23/02	21:17:03	81.164
07/23/02	21:18:03	81.733
07/23/02	21:19:03	80.340
07/23/02	21:20:03	81.733
07/23/02	21:21:03	82.785
07/23/02	21:22:03	80.340
07/23/02	21:23:03	81.022
07/23/02	21:24:03	81.676
07/23/02	21:25:03	80.823
07/23/02	21:26:03	81.676
07/23/02	21:27:03	80.965
07/23/02	21:28:03	81.591
07/23/02	21:29:03	81.050
07/23/02	21:30:03	81.335
07/23/02	21:31:03	80.396
07/23/02	21:32:03	81.449
07/23/02	21:33:03	80.311
07/23/02	21:34:03	81.733
07/23/02	21:35:03	80.624
07/23/02	21:36:03	81.164
07/23/02	21:37:03	81.648
07/23/02	21:38:03	80.027
07/23/02	21:39:03	81.534
07/23/02	21:40:03	80.396
07/23/02	21:41:03	80.738
07/23/02	21:42:03	79.970
07/23/02	21:43:03	80.340
07/23/02	21:44:03	81.505
07/23/02	21:45:03	80.197
07/23/02	21:46:03	80.823
07/23/02	21:47:03	80.880
07/23/02	21:48:03	81.164
07/23/02	21:49:03	80.254
07/23/02	21:50:03	82.017
07/23/02	21:51:03	82.529
07/23/02	21:52:03	81.676
07/23/02	21:53:03	81.193
07/23/02	21:54:03	81.193
07/23/02	21:55:03	81.932
07/23/02	21:56:03	80.880
07/23/02	21:57:03	81.050
07/23/02	21:58:03	81.250
07/23/02	21:59:03	80.595
07/23/02	22:00:03	82.103
07/23/02	22:01:03	81.250
07/23/02	22:02:03	79.828
07/23/02	22:03:03	81.534
07/23/02	22:04:03	81.449
07/23/02	22:05:03	81.022
07/23/02	22:06:03	81.392
07/23/02	22:07:03	82.017
07/23/02	22:08:03	80.965
07/23/02	22:09:03	80.738
07/23/02	22:10:03	80.453
07/23/02	22:11:03	79.884
07/23/02	22:12:03	80.880
07/23/02	22:13:03	80.169
07/23/02	22:14:03	80.112
07/23/02	22:15:03	82.245
07/23/02	22:16:03	79.913
07/23/02	22:17:03	81.164
07/23/02	22:18:03	80.738
07/23/02	22:19:03	81.250
07/23/02	22:20:03	80.908
07/23/02	22:21:03	80.738
07/23/02	22:22:03	82.871
07/23/02	22:23:03	82.103
07/23/02	22:24:03	80.055
07/23/02	22:25:03	81.505
07/23/02	22:26:03	79.884
07/23/02	22:27:03	81.875
07/23/02	22:28:03	81.050
07/23/02	22:29:03	80.595
07/23/02	22:30:03	79.344
07/23/02	22:31:03	81.392
07/23/02	22:32:03	79.600
07/23/02	22:33:03	80.738
07/23/02	22:34:03	79.884
07/23/02	22:35:03	80.027
07/23/02	22:36:03	80.254
07/23/02	22:37:03	81.164
07/23/02	22:38:03	79.458
07/23/02	22:39:03	81.050
07/23/02	22:40:03	81.392
07/23/02	22:41:03	78.918
07/23/02	22:42:03	81.306
07/23/02	22:43:03	80.482
07/23/02	22:44:03	80.908
07/23/02	22:45:03	81.050
07/23/02	22:46:03	80.766
07/23/02	22:47:03	81.193
07/23/02	22:48:03	82.160
07/23/02	22:49:03	80.197
07/23/02	22:50:03	81.676
07/23/02	22:51:03	80.340
07/23/02	22:52:03	81.392
07/23/02	22:53:03	80.112
07/23/02	22:54:03	81.648
07/23/02	22:55:03	80.681
07/23/02	22:56:03	81.022
07/23/02	22:57:03	80.396
07/23/02	22:58:03	81.534
07/23/02	22:59:03	80.681
07/23/02	23:00:03	81.875
07/23/02	23:01:03	80.880
07/23/02	23:02:03	80.624
07/23/02	23:03:03	80.169
07/23/02	23:04:03	80.681
07/23/02	23:05:03	80.908
07/23/02	23:06:03	80.965
07/23/02	23:07:03	81.250
07/23/02	23:08:03	81.022
07/23/02	23:09:03	81.449
07/23/02	23:10:03	81.193
07/23/02	23:11:03	80.823
07/23/02	23:12:03	80.681
07/23/02	23:13:03	81.392
07/23/02	23:14:03	81.392
07/23/02	23:15:03	81.050
07/23/02	23:16:03	81.164
07/23/02	23:17:03	80.908
07/23/02	23:18:03	81.193
07/23/02	23:19:03	81.449
07/23/02	23:20:03	81.306
07/23/02	23:21:03	81.505
07/23/02	23:22:03	81.022
07/23/02	23:23:03	81.790
07/23/02	23:24:03	79.913
07/23/02	23:25:03	80.965
07/23/02	23:26:03	81.164
07/23/02	23:27:03	80.766
07/23/02	23:28:03	81.505

GIRARD AND EARLE - NO. 7552 cont.

Date	Time	Pres (PSI)
07/23/02	23:29:03	81.505
07/23/02	23:30:03	79.970
07/23/02	23:31:03	81.164
07/23/02	23:32:03	81.107
07/23/02	23:33:03	80.681
07/23/02	23:34:03	82.728
07/23/02	23:35:03	80.681
07/23/02	23:36:03	81.961
07/23/02	23:37:03	80.823
07/23/02	23:38:03	81.676
07/23/02	23:39:03	80.766
07/23/02	23:40:03	81.164
07/23/02	23:41:03	82.074
07/23/02	23:42:03	81.392
07/23/02	23:43:03	81.164
07/23/02	23:44:03	82.216
07/23/02	23:45:03	81.050
07/23/02	23:46:03	82.074
07/23/02	23:47:03	80.539
07/23/02	23:48:03	82.216
07/23/02	23:49:03	80.539
07/23/02	23:50:03	80.624
07/23/02	23:51:03	81.107
07/23/02	23:52:03	81.164
07/23/02	23:53:03	80.880
07/23/02	23:54:03	82.216
07/23/02	23:55:03	80.595
07/23/02	23:56:03	81.505
07/23/02	23:57:03	81.534
07/23/02	23:58:03	80.396
07/23/02	23:59:03	81.193
07/24/02	00:00:03	80.396
07/24/02	00:01:03	82.359
07/24/02	00:02:03	80.624
07/24/02	00:03:03	80.908
07/24/02	00:04:03	80.880
07/24/02	00:05:03	80.681
07/24/02	00:06:03	80.823
07/24/02	00:07:03	80.340
07/24/02	00:08:03	80.539
07/24/02	00:09:03	81.818
07/24/02	00:10:03	80.396
07/24/02	00:11:03	80.595
07/24/02	00:12:03	81.790
07/24/02	00:13:03	81.107
07/24/02	00:14:03	80.539
07/24/02	00:15:03	81.818
07/24/02	00:16:03	80.112
07/24/02	00:17:03	82.160
07/24/02	00:18:03	81.107
07/24/02	00:19:03	81.107
07/24/02	00:20:03	80.396
07/24/02	00:21:03	81.107
07/24/02	00:22:03	81.022
07/24/02	00:23:03	80.681
07/24/02	00:24:03	80.482
07/24/02	00:25:03	81.676
07/24/02	00:26:03	80.340
07/24/02	00:27:03	82.103
07/24/02	00:28:03	82.074
07/24/02	00:29:03	80.880
07/24/02	00:30:03	81.449
07/24/02	00:31:03	81.306
07/24/02	00:32:03	80.482
07/24/02	00:33:03	80.340
07/24/02	00:34:03	80.908
07/24/02	00:35:03	81.534
07/24/02	00:36:03	80.340
07/24/02	00:37:03	81.164
07/24/02	00:38:03	80.482
07/24/02	00:39:03	81.164
07/24/02	00:40:03	82.017
07/24/02	00:41:03	81.392
07/24/02	00:42:03	80.738
07/24/02	00:43:03	80.908
07/24/02	00:44:03	81.164
07/24/02	00:45:03	80.823
07/24/02	00:46:03	81.648
07/24/02	00:47:03	81.306
07/24/02	00:48:03	80.340
07/24/02	00:49:03	80.738
07/24/02	00:50:03	80.340
07/24/02	00:51:03	89.383
07/24/02	00:52:03	78.690
07/24/02	00:53:03	83.809
07/24/02	00:54:03	81.591
07/24/02	00:55:03	81.193
07/24/02	00:56:03	82.103
07/24/02	00:57:03	81.449
07/24/02	00:58:03	81.875
07/24/02	00:59:03	81.306
07/24/02	01:00:03	81.875
07/24/02	01:01:03	81.250
07/24/02	01:02:03	81.449
07/24/02	01:03:03	81.676
07/24/02	01:04:03	82.359
07/24/02	01:05:03	81.164
07/24/02	01:06:03	81.875
07/24/02	01:07:03	81.875
07/24/02	01:08:03	81.306
07/24/02	01:09:03	81.392
07/24/02	01:10:03	82.814
07/24/02	01:11:03	81.648
07/24/02	01:12:03	81.875
07/24/02	01:13:03	81.932
07/24/02	01:14:03	82.017
07/24/02	01:15:03	81.449
07/24/02	01:16:03	81.932
07/24/02	01:17:03	82.359
07/24/02	01:18:03	81.335
07/24/02	01:19:03	82.671
07/24/02	01:20:03	81.534
07/24/02	01:21:03	81.961
07/24/02	01:22:03	81.875
07/24/02	01:23:03	81.534
07/24/02	01:24:03	82.359
07/24/02	01:25:03	81.392
07/24/02	01:26:03	81.932
07/24/02	01:27:03	82.871
07/24/02	01:28:03	81.392
07/24/02	01:29:03	81.648
07/24/02	01:30:03	81.022
07/24/02	01:31:03	82.103
07/24/02	01:32:03	82.501
07/24/02	01:33:03	81.733
07/24/02	01:34:03	82.302
07/24/02	01:35:03	81.591
07/24/02	01:36:03	81.107
07/24/02	01:37:03	82.245
07/24/02	01:38:03	82.216
07/24/02	01:39:03	81.875
07/24/02	01:40:03	81.961
07/24/02	01:41:03	81.591
07/24/02	01:42:03	81.648
07/24/02	01:43:03	81.534
07/24/02	01:44:03	81.392
07/24/02	01:45:03	82.359
07/24/02	01:46:03	81.932
07/24/02	01:47:03	81.591
07/24/02	01:48:03	82.160
07/24/02	01:49:03	82.529
07/24/02	01:50:03	81.648
07/24/02	01:51:03	82.728
07/24/02	01:52:03	81.050
07/24/02	01:53:03	81.875
07/24/02	01:54:03	81.335
07/24/02	01:55:03	81.818
07/24/02	01:56:03	82.359
07/24/02	01:57:03	82.017
07/24/02	01:58:03	82.074
07/24/02	01:59:03	82.785
07/24/02	02:00:03	81.875
07/24/02	02:01:03	81.932
07/24/02	02:02:03	82.074
07/24/02	02:03:03	81.250
07/24/02	02:04:03	82.302
07/24/02	02:05:03	81.875
07/24/02	02:06:03	81.790
07/24/02	02:07:03	81.790
07/24/02	02:08:03	81.591
07/24/02	02:09:03	82.216
07/24/02	02:10:03	81.193
07/24/02	02:11:03	82.814
07/24/02	02:12:03	81.193
07/24/02	02:13:03	82.871
07/24/02	02:14:03	81.505
07/24/02	02:15:03	81.733
07/24/02	02:16:03	82.103
07/24/02	02:17:03	81.875
07/24/02	02:18:03	81.875
07/24/02	02:19:03	81.875
07/24/02	02:20:03	82.103
07/24/02	02:21:03	81.790
07/24/02	02:22:03	81.306
07/24/02	02:23:03	81.306
07/24/02	02:24:03	82.927
07/24/02	02:25:03	81.875
07/24/02	02:26:03	82.671
07/24/02	02:27:03	81.107
07/24/02	02:28:03	81.648
07/24/02	02:29:03	81.392
07/24/02	02:30:03	81.648
07/24/02	02:31:03	81.818
07/24/02	02:32:03	81.676
07/24/02	02:33:03	82.160
07/24/02	02:34:03	81.875
07/24/02	02:35:03	81.591
07/24/02	02:36:03	81.022
07/24/02	02:37:03	81.961
07/24/02	02:38:03	81.505
07/24/02	02:39:03	82.103
07/24/02	02:40:03	81.818
07/24/02	02:41:03	81.932
07/24/02	02:42:03	81.875
07/24/02	02:43:03	81.790
07/24/02	02:44:03	81.164
07/24/02	02:45:03	82.359
07/24/02	02:46:03	82.017
07/24/02	02:47:03	81.107
07/24/02	02:48:03	82.529
07/24/02	02:49:03	81.961
07/24/02	02:50:03	80.965
07/24/02	02:51:03	80.965
07/24/02	02:52:03	82.017
07/24/02	02:53:03	81.932
07/24/02	02:54:03	82.586
07/24/02	02:55:03	81.875
07/24/02	02:56:03	81.875
07/24/02	02:57:03	81.818
07/24/02	02:58:03	82.216
07/24/02	02:59:03	81.676
07/24/02	03:00:03	82.103
07/24/02	03:01:03	82.501
07/24/02	03:02:03	81.591
07/24/02	03:03:03	82.103
07/24/02	03:04:03	82.501
07/24/02	03:05:03	81.648
07/24/02	03:06:03	81.932
07/24/02	03:07:03	82.529
07/24/02	03:08:03	81.250
07/24/02	03:09:03	81.591
07/24/02	03:10:03	82.160
07/24/02	03:11:03	81.961
07/24/02	03:12:03	81.449
07/24/02	03:13:03	81.676
07/24/02	03:14:03	81.961
07/24/02	03:15:03	81.534
07/24/02	03:16:03	82.387
07/24/02	03:17:03	81.505
07/24/02	03:18:03	82.074
07/24/02	03:19:03	82.501
07/24/02	03:20:03	81.676
07/24/02	03:21:03	81.193
07/24/02	03:22:03	81.790
07/24/02	03:23:03	82.103
07/24/02	03:24:03	81.591
07/24/02	03:25:03	81.790
07/24/02	03:26:03	82.501
07/24/02	03:27:03	81.932
07/24/02	03:28:03	81.961
07/24/02	03:29:03	82.871
07/24/02	03:30:03	81.335
07/24/02	03:31:03	81.591
07/24/02	03:32:03	82.302
07/24/02	03:33:03	81.818
07/24/02	03:34:03	81.250
07/24/02	03:35:03	82.359
07/24/02	03:36:03	81.733
07/24/02	03:37:03	81.790
07/24/02	03:38:03	82.245
07/24/02	03:39:03	81.961
07/24/02	03:40:03	81.875
07/24/02	03:41:03	82.074
07/24/02	03:42:03	81.050
07/24/02	03:43:03	82.387
07/24/02	03:44:03	82.216
07/24/02	03:45:03	82.302
07/24/02	03:46:03	81.932
07/24/02	03:47:03	82.160
07/24/02	03:48:03	81.306
07/24/02	03:49:03	81.875
07/24/02	03:50:03	81.306
07/24/02	03:51:03	82.387
07/24/02	03:52:03	81.335

GIRARD AND EARLE - NO. 7552 cont.

Date	Time	Pres (PSI)
07/24/02	03:53:03	81.193
07/24/02	03:54:03	82.103
07/24/02	03:55:03	81.534
07/24/02	03:56:03	81.932
07/24/02	03:57:03	81.648
07/24/02	03:58:03	81.875
07/24/02	03:59:03	81.875
07/24/02	04:00:03	81.733
07/24/02	04:01:03	81.306
07/24/02	04:02:03	81.818
07/24/02	04:03:03	81.250
07/24/02	04:04:03	81.961
07/24/02	04:05:03	81.449
07/24/02	04:06:03	81.648
07/24/02	04:07:03	81.648
07/24/02	04:08:03	81.050
07/24/02	04:09:03	82.074
07/24/02	04:10:03	81.790
07/24/02	04:11:03	82.302
07/24/02	04:12:03	81.733
07/24/02	04:13:03	81.505
07/24/02	04:14:03	82.359
07/24/02	04:15:03	81.875
07/24/02	04:16:03	82.444
07/24/02	04:17:03	82.074
07/24/02	04:18:03	81.961
07/24/02	04:19:03	82.387
07/24/02	04:20:03	81.676
07/24/02	04:21:03	81.505
07/24/02	04:22:03	82.359
07/24/02	04:23:03	81.818
07/24/02	04:24:03	81.875
07/24/02	04:25:03	81.648
07/24/02	04:26:03	81.505
07/24/02	04:27:03	82.529
07/24/02	04:28:03	81.505
07/24/02	04:29:03	82.074
07/24/02	04:30:03	81.733
07/24/02	04:31:03	81.648
07/24/02	04:32:03	82.074
07/24/02	04:33:03	81.932
07/24/02	04:34:03	81.534
07/24/02	04:35:03	81.875
07/24/02	04:36:03	81.961
07/24/02	04:37:03	81.733
07/24/02	04:38:03	81.335
07/24/02	04:39:03	82.302
07/24/02	04:40:03	81.591
07/24/02	04:41:03	82.216
07/24/02	04:42:03	82.103
07/24/02	04:43:03	82.103
07/24/02	04:44:03	81.875
07/24/02	04:45:03	82.017
07/24/02	04:46:03	81.733
07/24/02	04:47:03	81.534
07/24/02	04:48:03	81.932
07/24/02	04:49:03	81.449
07/24/02	04:50:03	82.074
07/24/02	04:51:03	81.790
07/24/02	04:52:03	82.529
07/24/02	04:53:03	81.534
07/24/02	04:54:03	81.818
07/24/02	04:55:03	81.505
07/24/02	04:56:03	82.302
07/24/02	04:57:03	81.449
07/24/02	04:58:03	81.790
07/24/02	04:59:03	81.449
07/24/02	05:00:03	82.245
07/24/02	05:01:03	81.733
07/24/02	05:02:03	81.591
07/24/02	05:03:03	82.302
07/24/02	05:04:03	80.880
07/24/02	05:05:03	82.216
07/24/02	05:06:03	81.335
07/24/02	05:07:03	81.733
07/24/02	05:08:03	81.306
07/24/02	05:09:03	82.302
07/24/02	05:10:03	81.932
07/24/02	05:11:03	81.818
07/24/02	05:12:03	82.387
07/24/02	05:13:03	81.961
07/24/02	05:14:03	82.103
07/24/02	05:15:03	82.017
07/24/02	05:16:03	81.932
07/24/02	05:17:03	82.074
07/24/02	05:18:03	81.676
07/24/02	05:19:03	81.648
07/24/02	05:20:03	82.444
07/24/02	05:21:03	82.017
07/24/02	05:22:03	81.591
07/24/02	05:23:03	82.160
07/24/02	05:24:03	81.164
07/24/02	05:25:03	82.245
07/24/02	05:26:03	81.961
07/24/02	05:27:03	81.050
07/24/02	05:28:03	82.671
07/24/02	05:29:03	81.932
07/24/02	05:30:03	81.591
07/24/02	05:31:03	83.781
07/24/02	05:32:03	82.444
07/24/02	05:33:03	81.648
07/24/02	05:34:03	81.648
07/24/02	05:35:03	81.875
07/24/02	05:36:03	81.306
07/24/02	05:37:03	81.932
07/24/02	05:38:03	81.591
07/24/02	05:39:03	81.676
07/24/02	05:40:03	82.216
07/24/02	05:41:03	82.643
07/24/02	05:42:03	80.908
07/24/02	05:43:03	82.444
07/24/02	05:44:03	81.591
07/24/02	05:45:03	81.306
07/24/02	05:46:03	82.160
07/24/02	05:47:03	81.392
07/24/02	05:48:03	82.529
07/24/02	05:49:03	81.392
07/24/02	05:50:03	81.961
07/24/02	05:51:03	81.790
07/24/02	05:52:03	81.648
07/24/02	05:53:03	81.306
07/24/02	05:54:03	81.591
07/24/02	05:55:03	81.335
07/24/02	05:56:03	82.017
07/24/02	05:57:03	81.193
07/24/02	05:58:03	81.733
07/24/02	05:59:03	81.534
07/24/02	06:00:03	82.017
07/24/02	06:01:03	81.591
07/24/02	06:02:03	81.932
07/24/02	06:03:03	82.359
07/24/02	06:04:03	81.250
07/24/02	06:05:03	80.880
07/24/02	06:06:03	82.245
07/24/02	06:07:03	81.335
07/24/02	06:08:03	82.160
07/24/02	06:09:03	82.444
07/24/02	06:10:03	81.250
07/24/02	06:11:03	82.444
07/24/02	06:12:03	81.534
07/24/02	06:13:03	80.880
07/24/02	06:14:03	82.444
07/24/02	06:15:03	81.790
07/24/02	06:16:03	81.591
07/24/02	06:17:03	81.790
07/24/02	06:18:03	82.160
07/24/02	06:19:03	81.534
07/24/02	06:20:03	80.880
07/24/02	06:21:03	82.444
07/24/02	06:22:03	82.074
07/24/02	06:23:03	82.216
07/24/02	06:24:03	81.107
07/24/02	06:25:03	81.733
07/24/02	06:26:03	81.505
07/24/02	06:27:03	81.022
07/24/02	06:28:03	81.193
07/24/02	06:29:03	80.823
07/24/02	06:30:03	81.505
07/24/02	06:31:03	82.017
07/24/02	06:32:03	81.648
07/24/02	06:33:03	81.193
07/24/02	06:34:03	81.875
07/24/02	06:35:03	81.193
07/24/02	06:36:03	86.255
07/24/02	06:37:03	82.444
07/24/02	06:38:03	82.814
07/24/02	06:39:03	82.871
07/24/02	06:40:03	82.956
07/24/02	06:41:03	83.212
07/24/02	06:42:03	82.160
07/24/02	06:43:03	82.302
07/24/02	06:44:03	82.814
07/24/02	06:45:03	82.586
07/24/02	06:46:03	82.927
07/24/02	06:47:03	81.676
07/24/02	06:48:03	82.501
07/24/02	06:49:03	82.359
07/24/02	06:50:03	82.216
07/24/02	06:51:03	82.359
07/24/02	06:52:03	81.676
07/24/02	06:53:03	82.586
07/24/02	06:54:03	82.216
07/24/02	06:55:03	81.676
07/24/02	06:56:03	81.733
07/24/02	06:57:03	81.648
07/24/02	06:58:03	82.529
07/24/02	06:59:03	82.814
07/24/02	07:00:03	82.074
07/24/02	07:01:03	81.790
07/24/02	07:02:03	83.240
07/24/02	07:03:03	81.733
07/24/02	07:04:03	81.676
07/24/02	07:05:03	82.728
07/24/02	07:06:03	82.927
07/24/02	07:07:03	82.444
07/24/02	07:08:03	82.387
07/24/02	07:09:03	82.643
07/24/02	07:10:03	82.074
07/24/02	07:11:03	82.160
07/24/02	07:12:03	81.818
07/24/02	07:13:03	82.871
07/24/02	07:14:03	82.017
07/24/02	07:15:03	81.818
07/24/02	07:16:03	82.359
07/24/02	07:17:03	82.785
07/24/02	07:18:03	82.927
07/24/02	07:19:03	81.875
07/24/02	07:20:03	82.074
07/24/02	07:21:03	82.814
07/24/02	07:22:03	82.302
07/24/02	07:23:03	81.733
07/24/02	07:24:03	82.814
07/24/02	07:25:03	82.216
07/24/02	07:26:03	80.908
07/24/02	07:27:03	82.017
07/24/02	07:28:03	82.216
07/24/02	07:29:03	82.160
07/24/02	07:30:03	82.444
07/24/02	07:31:03	81.932
07/24/02	07:32:03	83.098
07/24/02	07:33:03	82.529
07/24/02	07:34:03	82.074
07/24/02	07:35:03	82.671
07/24/02	07:36:03	82.245
07/24/02	07:37:03	82.387
07/24/02	07:38:03	83.297
07/24/02	07:39:03	82.927
07/24/02	07:40:03	82.728
07/24/02	07:41:03	82.671
07/24/02	07:42:03	82.160
07/24/02	07:43:03	82.160
07/24/02	07:44:03	83.070
07/24/02	07:45:03	82.302
07/24/02	07:46:03	83.923
07/24/02	07:47:03	83.525
07/24/02	07:48:03	83.724
07/24/02	07:49:03	82.160
07/24/02	07:50:03	82.444
07/24/02	07:51:03	82.529
07/24/02	07:52:03	82.814
07/24/02	07:53:03	82.871
07/24/02	07:54:03	82.956
07/24/02	07:55:03	83.297
07/24/02	07:56:03	82.529
07/24/02	07:57:03	83.155
07/24/02	07:58:03	82.501
07/24/02	07:59:03	83.098
07/24/02	08:00:03	83.496
07/24/02	08:01:03	82.956
07/24/02	08:02:03	83.070
07/24/02	08:03:03	82.387
07/24/02	08:04:03	83.582
07/24/02	08:05:03	83.098
07/24/02	08:06:03	82.444
07/24/02	08:07:03	82.785
07/24/02	08:08:03	81.733
07/24/02	08:09:03	82.728
07/24/02	08:10:03	82.814
07/24/02	08:11:03	83.212
07/24/02	08:12:03	82.245
07/24/02	08:13:03	82.586
07/24/02	08:14:03	82.785
07/24/02	08:15:03	83.525
07/24/02	08:16:03	81.790

GIRARD AND EARLE - NO. 7552 cont.

Date	Time	Pres (PSI)	Date	Time	Pres (PSI)	Date	Time	Pres (PSI)	Date	Time	Pres (PSI)
07/24/02	08:17:03	83.638	07/24/02	09:23:03	88.331	07/24/02	10:29:03	88.615	07/24/02	11:35:03	81.648
07/24/02	08:18:03	82.643	07/24/02	09:24:03	87.392	07/24/02	10:30:03	66.177	07/24/02	11:36:03	81.961
07/24/02	08:19:03	82.814	07/24/02	09:25:03	87.677	07/24/02	10:31:03	86.568	07/24/02	11:37:03	82.529
07/24/02	08:20:03	82.160	07/24/02	09:26:03	87.392	07/24/02	10:32:03	85.203	07/24/02	11:38:03	82.074
07/24/02	08:21:03	82.586	07/24/02	09:27:03	88.473	07/24/02	10:33:03	81.449	07/24/02	11:39:03	82.216
07/24/02	08:22:03	82.814	07/24/02	09:28:03	87.904	07/24/02	10:34:03	82.586	07/24/02	11:40:03	82.529
07/24/02	08:23:03	82.245	07/24/02	09:29:03	88.046	07/24/02	10:35:03	81.875	07/24/02	11:41:03	82.103
07/24/02	08:24:03	82.814	07/24/02	09:30:03	87.136	07/24/02	10:36:03	84.548	07/24/02	11:42:03	82.302
07/24/02	08:25:03	83.525	07/24/02	09:31:03	88.103	07/24/02	10:37:03	82.444	07/24/02	11:43:03	81.335
07/24/02	08:26:03	82.785	07/24/02	09:32:03	87.734	07/24/02	10:38:03	83.155	07/24/02	11:44:03	82.387
07/24/02	08:27:03	83.013	07/24/02	09:33:03	87.136	07/24/02	10:39:03	82.671	07/24/02	11:45:03	82.785
07/24/02	08:28:03	83.212	07/24/02	09:34:03	86.767	07/24/02	10:40:03	82.444	07/24/02	11:46:03	81.961
07/24/02	08:29:03	81.961	07/24/02	09:35:03	88.018	07/24/02	10:41:03	82.387	07/24/02	11:47:03	82.216
07/24/02	08:30:03	82.359	07/24/02	09:36:03	88.160	07/24/02	10:42:03	81.875	07/24/02	11:48:03	82.387
07/24/02	08:31:03	82.956	07/24/02	09:37:03	88.302	07/24/02	10:43:03	82.956	07/24/02	11:49:03	81.449
07/24/02	08:32:03	90.919	07/24/02	09:38:03	87.449	07/24/02	10:44:03	82.671	07/24/02	11:50:03	81.961
07/24/02	08:33:03	87.677	07/24/02	09:39:03	86.909	07/24/02	10:45:03	83.439	07/24/02	11:51:03	82.387
07/24/02	08:34:03	88.814	07/24/02	09:40:03	87.819	07/24/02	10:46:03	83.070	07/24/02	11:52:03	81.449
07/24/02	08:35:03	88.473	07/24/02	09:41:03	88.530	07/24/02	10:47:03	82.302	07/24/02	11:53:03	81.733
07/24/02	08:36:03	88.160	07/24/02	09:42:03	87.535	07/24/02	10:48:03	82.444	07/24/02	11:54:03	81.306
07/24/02	08:37:03	88.814	07/24/02	09:43:03	87.449	07/24/02	10:49:03	83.638	07/24/02	11:55:03	82.160
07/24/02	08:38:03	87.961	07/24/02	09:44:03	88.331	07/24/02	10:50:03	82.671	07/24/02	11:56:03	81.306
07/24/02	08:39:03	88.189	07/24/02	09:45:03	87.904	07/24/02	10:51:03	82.387	07/24/02	11:57:03	81.392
07/24/02	08:40:03	88.388	07/24/02	09:46:03	88.672	07/24/02	10:52:03	82.956	07/24/02	11:58:03	82.359
07/24/02	08:41:03	88.615	07/24/02	09:47:03	88.445	07/24/02	10:53:03	82.814	07/24/02	11:59:03	80.055
07/24/02	08:42:03	87.819	07/24/02	09:48:03	88.473	07/24/02	10:54:03	82.956	07/24/02	12:00:03	81.306
07/24/02	08:43:03	88.103	07/24/02	09:49:03	89.724	07/24/02	10:55:03	82.871	07/24/02	12:01:03	82.074
07/24/02	08:44:03	88.103	07/24/02	09:50:03	88.530	07/24/02	10:56:03	82.785	07/24/02	12:02:03	80.681
07/24/02	08:45:03	88.331	07/24/02	09:51:03	87.591	07/24/02	10:57:03	82.956	07/24/02	12:03:03	81.193
07/24/02	08:46:03	88.445	07/24/02	09:52:03	87.620	07/24/02	10:58:03	81.790	07/24/02	12:04:03	81.733
07/24/02	08:47:03	89.013	07/24/02	09:53:03	87.734	07/24/02	10:59:03	83.638	07/24/02	12:05:03	80.681
07/24/02	08:48:03	88.814	07/24/02	09:54:03	87.904	07/24/02	11:00:03	92.853	07/24/02	12:06:03	79.629
07/24/02	08:49:03	88.046	07/24/02	09:55:03	88.530	07/24/02	11:01:03	78.263	07/24/02	12:07:03	81.392
07/24/02	08:50:03	88.189	07/24/02	09:56:03	88.672	07/24/02	11:02:03	80.595	07/24/02	12:08:03	81.733
07/24/02	08:51:03	88.473	07/24/02	09:57:03	88.245	07/24/02	11:03:03	83.212	07/24/02	12:09:03	80.766
07/24/02	08:52:03	87.449	07/24/02	09:58:03	88.672	07/24/02	11:04:03	81.591	07/24/02	12:10:03	82.103
07/24/02	08:53:03	87.819	07/24/02	09:59:03	88.473	07/24/02	11:05:03	82.103	07/24/02	12:11:03	82.956
07/24/02	08:54:03	88.103	07/24/02	10:00:03	89.468	07/24/02	11:06:03	81.306	07/24/02	12:12:03	81.676
07/24/02	08:55:03	87.478	07/24/02	10:01:03	89.184	07/24/02	11:07:03	82.302	07/24/02	12:13:03	81.932
07/24/02	08:56:03	87.734	07/24/02	10:02:03	88.814	07/24/02	11:08:03	80.880	07/24/02	12:14:03	82.017
07/24/02	08:57:03	87.620	07/24/02	10:03:03	88.302	07/24/02	11:09:03	82.586	07/24/02	12:15:03	81.505
07/24/02	08:58:03	88.245	07/24/02	10:04:03	88.046	07/24/02	11:10:03	81.932	07/24/02	12:16:03	82.643
07/24/02	08:59:03	88.445	07/24/02	10:05:03	88.388	07/24/02	11:11:03	80.766	07/24/02	12:17:03	81.449
07/24/02	09:00:03	88.189	07/24/02	10:06:03	88.473	07/24/02	11:12:03	82.785	07/24/02	12:18:03	80.965
07/24/02	09:01:03	87.591	07/24/02	10:07:03	88.388	07/24/02	11:13:03	82.529	07/24/02	12:19:03	80.624
07/24/02	09:02:03	87.620	07/24/02	10:08:03	89.156	07/24/02	11:14:03	83.070	07/24/02	12:20:03	82.216
07/24/02	09:03:03	87.535	07/24/02	10:09:03	88.473	07/24/02	11:15:03	82.387	07/24/02	12:21:03	80.908
07/24/02	09:04:03	87.961	07/24/02	10:10:03	88.757	07/24/02	11:16:03	82.216	07/24/02	12:22:03	81.250
07/24/02	09:05:03	87.677	07/24/02	10:11:03	88.331	07/24/02	11:17:03	82.387	07/24/02	12:23:03	80.823
07/24/02	09:06:03	88.018	07/24/02	10:12:03	89.099	07/24/02	11:18:03	81.193	07/24/02	12:24:03	81.818
07/24/02	09:07:03	87.677	07/24/02	10:13:03	88.530	07/24/02	11:19:03	80.766	07/24/02	12:25:03	81.164
07/24/02	09:08:03	87.961	07/24/02	10:14:03	88.672	07/24/02	11:20:03	82.387	07/24/02	12:26:03	80.823
07/24/02	09:09:03	88.388	07/24/02	10:15:03	88.672	07/24/02	11:21:03	81.961	07/24/02	12:27:03	82.444
07/24/02	09:10:03	87.307	07/24/02	10:16:03	88.530	07/24/02	11:22:03	83.013	07/24/02	12:28:03	81.335
07/24/02	09:11:03	87.734	07/24/02	10:17:03	89.241	07/24/02	11:23:03	82.586	07/24/02	12:29:03	81.193
07/24/02	09:12:03	88.189	07/24/02	10:18:03	89.013	07/24/02	11:24:03	82.359	07/24/02	12:30:03	82.074
07/24/02	09:13:03	88.757	07/24/02	10:19:03	88.160	07/24/02	11:25:03	82.927	07/24/02	12:31:03	81.505
07/24/02	09:14:03	87.762	07/24/02	10:20:03	88.587	07/24/02	11:26:03	81.676	07/24/02	12:32:03	81.250
07/24/02	09:15:03	87.819	07/24/02	10:21:03	88.587	07/24/02	11:27:03	81.932	07/24/02	12:33:03	81.193
07/24/02	09:16:03	87.734	07/24/02	10:22:03	88.814	07/24/02	11:28:03	82.927	07/24/02	12:34:03	82.245
07/24/02	09:17:03	88.331	07/24/02	10:23:03	88.160	07/24/02	11:29:03	82.245	07/24/02	12:35:03	81.449
07/24/02	09:18:03	87.449	07/24/02	10:24:03	88.729	07/24/02	11:30:03	82.814	07/24/02	12:36:03	81.961
07/24/02	09:19:03	87.876	07/24/02	10:25:03	88.473	07/24/02	11:31:03	83.013	07/24/02	12:37:03	82.728
07/24/02	09:20:03	87.591	07/24/02	10:26:03	88.530	07/24/02	11:32:03	81.164	07/24/02	12:38:03	80.965
07/24/02	09:21:03	87.904	07/24/02	10:27:03	88.530	07/24/02	11:33:03	81.790	07/24/02	12:39:03	81.818
07/24/02	09:22:03	88.189	07/24/02	10:28:03	88.445	07/24/02	11:34:03	82.586	07/24/02	12:40:03	80.482

GIRARD AND EARLE - NO. 7552 cont.

Date	Time	Pres (PSI)
07/24/02	12:41:03	82.444
07/24/02	12:42:03	81.022
07/24/02	12:43:03	80.112
07/24/02	12:44:03	81.193
07/24/02	12:45:03	81.591
07/24/02	12:46:03	81.306
07/24/02	12:47:03	81.050
07/24/02	12:48:03	80.595
07/24/02	12:49:03	82.245
07/24/02	12:50:03	80.908
07/24/02	12:51:03	81.875
07/24/02	12:52:03	81.107
07/24/02	12:53:03	79.913
07/24/02	12:54:03	82.444
07/24/02	12:55:03	82.785
07/24/02	12:56:03	82.871
07/24/02	12:57:03	81.534
07/24/02	12:58:03	80.453
07/24/02	12:59:03	81.648
07/24/02	13:00:03	80.112
07/24/02	13:01:03	82.814
07/24/02	13:02:03	81.164
07/24/02	13:03:03	80.254
07/24/02	13:04:03	82.444
07/24/02	13:05:03	80.169
07/24/02	13:06:03	81.818
07/24/02	13:07:03	82.444
07/24/02	13:08:03	81.534
07/24/02	13:09:03	81.534
07/24/02	13:10:03	81.107
07/24/02	13:11:03	81.250
07/24/02	13:12:03	81.306
07/24/02	13:13:03	81.449
07/24/02	13:14:03	80.482
07/24/02	13:15:03	81.050
07/24/02	13:16:03	81.050
07/24/02	13:17:03	80.738
07/24/02	13:18:03	81.534
07/24/02	13:19:03	80.254
07/24/02	13:20:03	80.908
07/24/02	13:21:03	81.164
07/24/02	13:22:03	80.681
07/24/02	13:23:03	82.586
07/24/02	13:24:03	80.340
07/24/02	13:25:03	82.017
07/24/02	13:26:03	80.396
07/24/02	13:27:03	81.050
07/24/02	13:28:03	80.823
07/24/02	13:29:03	80.595
07/24/02	13:30:03	81.107
07/24/02	13:31:03	80.197
07/24/02	13:32:03	81.107
07/24/02	13:33:03	80.539
07/24/02	13:34:03	81.335
07/24/02	13:35:03	80.738
07/24/02	13:36:03	81.050
07/24/02	13:37:03	81.193
07/24/02	13:38:03	79.401
07/24/02	13:39:03	80.396
07/24/02	13:40:03	79.685
07/24/02	13:41:03	80.197
07/24/02	13:42:03	80.453
07/24/02	13:43:03	80.482
07/24/02	13:44:03	79.884
07/24/02	13:45:03	80.311
07/24/02	13:46:03	80.112
07/24/02	13:47:03	79.884
07/24/02	13:48:03	80.965
07/24/02	13:49:03	81.676
07/24/02	13:50:03	80.624
07/24/02	13:51:03	80.908
07/24/02	13:52:03	80.681
07/24/02	13:53:03	80.453
07/24/02	13:54:03	80.766
07/24/02	13:55:03	79.884
07/24/02	13:56:03	81.193
07/24/02	13:57:03	80.738
07/24/02	13:58:03	80.453
07/24/02	13:59:03	80.482
07/24/02	14:00:03	81.250
07/24/02	14:01:03	81.250
07/24/02	14:02:03	81.875
07/24/02	14:03:03	80.112
07/24/02	14:04:03	80.766
07/24/02	14:05:03	81.790
07/24/02	14:06:03	79.742
07/24/02	14:07:03	81.250
07/24/02	14:08:03	81.107
07/24/02	14:09:03	81.875
07/24/02	14:10:03	80.965
07/24/02	14:11:03	80.624
07/24/02	14:12:03	79.742
07/24/02	14:13:03	80.880
07/24/02	14:14:03	79.828
07/24/02	14:15:03	79.884
07/24/02	14:16:03	82.302
07/24/02	14:17:03	80.453
07/24/02	14:18:03	80.340
07/24/02	14:19:03	79.174
07/24/02	14:20:03	79.600
07/24/02	14:21:03	80.340
07/24/02	14:22:03	83.240
07/24/02	14:23:03	81.733
07/24/02	14:24:03	82.871
07/24/02	14:25:03	81.676
07/24/02	14:26:03	81.050
07/24/02	14:27:03	81.505
07/24/02	14:28:03	81.250
07/24/02	14:29:03	81.961
07/24/02	14:30:03	81.591
07/24/02	14:31:03	80.880
07/24/02	14:32:03	82.671
07/24/02	14:33:03	80.880
07/24/02	14:34:03	82.529
07/24/02	14:35:03	81.733
07/24/02	14:36:03	81.790
07/24/02	14:37:03	0.171
07/24/02	14:38:03	0.142
07/24/02	14:39:03	0.142
07/24/02	14:40:03	0.085
07/24/02	14:41:03	0.142
07/24/02	14:42:03	0.085
07/24/02	14:43:03	0.142
07/24/02	14:44:03	0.142
07/24/02	14:45:03	0.142
07/24/02	14:46:03	0.142
07/24/02	14:47:03	0.142
07/24/02	14:48:03	0.142
07/24/02	14:49:03	0.142
07/24/02	14:50:03	0.142
07/24/02	14:51:03	0.085
07/24/02	14:52:03	0.142
07/24/02	14:53:03	0.085
07/24/02	14:54:03	0.142
07/24/02	14:55:03	0.142
07/24/02	14:56:03	0.142
07/24/02	14:57:03	0.171
07/24/02	14:58:03	0.085
07/24/02	14:59:03	0.085
07/24/02	15:00:03	0.085
07/24/02	15:01:03	0.085
07/24/02	15:02:03	0.142
07/24/02	15:03:03	0.142
07/24/02	15:04:03	0.171
07/24/02	15:05:03	0.142
07/24/02	15:06:03	0.142
07/24/02	15:07:03	0.142
07/24/02	15:08:03	0.142
07/24/02	15:09:03	0.142
07/24/02	15:10:03	0.171
07/24/02	15:11:03	0.142
07/24/02	15:12:03	0.142
07/24/02	15:13:03	0.142
07/24/02	15:14:03	0.142
07/24/02	15:15:03	0.142
07/24/02	15:16:03	0.142
07/24/02	15:17:03	0.171
07/24/02	15:18:03	0.171
07/24/02	15:19:03	0.171
07/24/02	15:20:03	0.142
07/24/02	15:21:03	0.142
07/24/02	15:22:03	0.171
07/24/02	15:23:03	0.142
07/24/02	15:24:03	0.171
07/24/02	15:25:03	0.171
07/24/02	15:26:03	0.142
07/24/02	15:27:03	0.171
07/24/02	15:28:03	0.142
07/24/02	15:29:03	0.171
07/24/02	15:30:03	0.171
07/24/02	15:31:03	0.171
07/24/02	15:32:03	0.171
07/24/02	15:33:03	0.228
07/24/02	15:34:03	0.171
07/24/02	15:35:03	0.171
07/24/02	15:36:03	0.171
07/24/02	15:37:03	0.142
07/24/02	15:38:03	0.142
07/24/02	15:39:03	0.142
07/24/02	15:40:03	0.142
07/24/02	15:41:03	0.142
07/24/02	15:42:03	0.142
07/24/02	15:43:03	0.142
07/24/02	15:44:03	0.171
07/24/02	15:45:03	0.142
07/24/02	15:46:03	0.142
07/24/02	15:47:03	0.142
07/24/02	15:48:03	0.142
07/24/02	15:49:03	0.171
07/24/02	15:50:03	0.171
07/24/02	15:51:03	0.142
07/24/02	15:52:03	0.142
07/24/02	15:53:03	0.142
07/24/02	15:54:03	0.142
07/24/02	15:55:03	0.142
07/24/02	15:56:03	0.171
07/24/02	15:57:03	0.142
07/24/02	15:58:03	0.142
07/24/02	15:59:03	0.142
07/24/02	16:00:03	0.171
07/24/02	16:01:03	0.142
07/24/02	16:02:03	0.171
07/24/02	16:03:03	0.171
07/24/02	16:04:03	0.142
07/24/02	16:05:03	0.142
07/24/02	16:06:03	0.142
07/24/02	16:07:03	0.142
07/24/02	16:08:03	0.142

HOPKINS AND BOBCAT - NO. 7158

Date	Time	Pres (PSI)
07/22/02	14:13:04	-0.597
07/22/02	14:14:04	-0.569
07/22/02	14:15:04	-0.597
07/22/02	14:16:04	-0.569
07/22/02	14:17:04	-0.597
07/22/02	14:18:04	-0.597
07/22/02	14:19:04	-0.569
07/22/02	14:20:04	-0.569
07/22/02	14:21:04	-0.597
07/22/02	14:22:04	-0.597
07/22/02	14:23:04	-0.569
07/22/02	14:24:04	-0.569
07/22/02	14:25:04	-0.597
07/22/02	14:26:04	-0.597
07/22/02	14:27:04	-0.597
07/22/02	14:28:04	-0.597
07/22/02	14:29:04	-0.597
07/22/02	14:30:04	-0.569
07/22/02	14:31:04	-0.597
07/22/02	14:32:04	-0.597
07/22/02	14:33:04	-0.654
07/22/02	14:34:04	-0.597
07/22/02	14:35:04	-0.597
07/22/02	14:36:04	-0.597
07/22/02	14:37:04	-0.597
07/22/02	14:38:04	-0.597
07/22/02	14:39:04	-0.654
07/22/02	14:40:04	-0.654
07/22/02	14:41:04	-0.597
07/22/02	14:42:04	-0.654
07/22/02	14:43:04	-0.654
07/22/02	14:44:04	-0.597
07/22/02	14:45:04	-0.597
07/22/02	14:46:04	-0.597
07/22/02	14:47:04	-0.597
07/22/02	14:48:04	-0.597
07/22/02	14:49:04	-0.597
07/22/02	14:50:04	-0.654
07/22/02	14:51:04	-0.597
07/22/02	14:52:04	-0.569
07/22/02	14:53:04	-0.597
07/22/02	14:54:04	-0.569
07/22/02	14:55:04	-0.597
07/22/02	14:56:04	-0.597
07/22/02	14:57:04	-0.654
07/22/02	14:58:04	-0.597
07/22/02	14:59:04	-0.654
07/22/02	15:00:04	-0.597
07/22/02	15:01:04	-0.654
07/22/02	15:02:04	-0.597
07/22/02	15:03:04	-0.654
07/22/02	15:04:04	-0.597
07/22/02	15:05:04	-0.654
07/22/02	15:06:04	-0.597
07/22/02	15:07:04	-0.654
07/22/02	15:08:04	-0.597
07/22/02	15:09:04	-0.654
07/22/02	15:10:04	-0.654
07/22/02	15:11:04	-0.597
07/22/02	15:12:04	-0.654
07/22/02	15:13:04	-0.597
07/22/02	15:14:04	-0.597
07/22/02	15:15:04	-0.597
07/22/02	15:16:04	-0.597
07/22/02	15:17:04	-0.569
07/22/02	15:18:04	-0.654
07/22/02	15:19:04	-0.711
07/22/02	15:20:04	-0.597
07/22/02	15:21:04	84.093
07/22/02	15:22:04	84.179
07/22/02	15:23:04	84.748
07/22/02	15:24:04	84.634
07/22/02	15:25:04	84.122
07/22/02	15:26:04	84.719
07/22/02	15:27:04	84.264
07/22/02	15:28:04	84.804
07/22/02	15:29:04	82.984
07/22/02	15:30:04	83.781
07/22/02	15:31:04	83.951
07/22/02	15:32:04	83.297
07/22/02	15:33:04	83.809
07/22/02	15:34:04	84.492
07/22/02	15:35:04	82.927
07/22/02	15:36:04	84.719
07/22/02	15:37:04	85.601
07/22/02	15:38:04	85.060
07/22/02	15:39:04	85.060
07/22/02	15:40:04	85.515
07/22/02	15:41:04	84.947
07/22/02	15:42:04	85.515
07/22/02	15:43:04	83.411
07/22/02	15:44:04	84.833
07/22/02	15:45:04	86.056
07/22/02	15:46:04	87.990
07/22/02	15:47:04	89.525
07/22/02	15:48:04	89.866
07/22/02	15:49:04	89.440
07/22/02	15:50:04	89.866
07/22/02	15:51:04	87.990
07/22/02	15:52:04	89.298
07/22/02	15:53:04	89.070
07/22/02	15:54:04	89.298
07/22/02	15:55:04	87.990
07/22/02	15:56:04	88.274
07/22/02	15:57:04	87.904
07/22/02	15:58:04	87.335
07/22/02	15:59:04	88.132
07/22/02	16:00:04	87.335
07/22/02	16:01:04	87.990
07/22/02	16:02:04	87.421
07/22/02	16:03:04	86.312
07/22/02	16:04:04	86.624
07/22/02	16:05:04	88.046
07/22/02	16:06:04	88.757
07/22/02	16:07:04	87.108
07/22/02	16:08:04	86.226
07/22/02	16:09:04	88.416
07/22/02	16:10:04	89.070
07/22/02	16:11:04	86.710
07/22/02	16:12:04	87.165
07/22/02	16:13:04	89.639
07/22/02	16:14:04	86.539
07/22/02	16:15:04	86.141
07/22/02	16:16:04	86.255
07/22/02	16:17:04	86.084
07/22/02	16:18:04	84.435
07/22/02	16:19:04	87.478
07/22/02	16:20:04	86.710
07/22/02	16:21:04	87.648
07/22/02	16:22:04	87.506
07/22/02	16:23:04	87.279
07/22/02	16:24:04	87.591
07/22/02	16:25:04	87.023
07/22/02	16:26:04	89.866
07/22/02	16:27:04	86.966
07/22/02	16:28:04	86.568
07/22/02	16:29:04	88.814
07/22/02	16:30:04	87.023
07/22/02	16:31:04	87.478
07/22/02	16:32:04	87.279
07/22/02	16:33:04	87.108
07/22/02	16:34:04	87.193
07/22/02	16:35:04	86.937
07/22/02	16:36:04	87.478
07/22/02	16:37:04	86.795
07/22/02	16:38:04	86.454
07/22/02	16:39:04	87.335
07/22/02	16:40:04	87.165
07/22/02	16:41:04	88.103
07/22/02	16:42:04	86.852
07/22/02	16:43:04	87.819
07/22/02	16:44:04	87.478
07/22/02	16:45:04	88.416
07/22/02	16:46:04	88.843
07/22/02	16:47:04	86.681
07/22/02	16:48:04	88.615
07/22/02	16:49:04	88.814
07/22/02	16:50:04	88.587
07/22/02	16:51:04	87.648
07/22/02	16:52:04	87.335
07/22/02	16:53:04	85.373
07/22/02	16:54:04	87.193
07/22/02	16:55:04	86.767
07/22/02	16:56:04	88.359
07/22/02	16:57:04	87.165
07/22/02	16:58:04	86.681
07/22/02	16:59:04	87.079
07/22/02	17:00:04	86.397
07/22/02	17:01:04	86.880
07/22/02	17:02:04	85.032
07/22/02	17:03:04	87.165
07/22/02	17:04:04	85.658
07/22/02	17:05:04	87.563
07/22/02	17:06:04	86.312
07/22/02	17:07:04	87.705
07/22/02	17:08:04	86.255
07/22/02	17:09:04	87.506
07/22/02	17:10:04	87.563
07/22/02	17:11:04	88.530
07/22/02	17:12:04	87.023
07/22/02	17:13:04	86.767
07/22/02	17:14:04	86.624
07/22/02	17:15:04	88.103
07/22/02	17:16:04	87.990
07/22/02	17:17:04	85.601
07/22/02	17:18:04	87.193
07/22/02	17:19:04	86.852
07/22/02	17:20:04	87.648
07/22/02	17:21:04	86.767
07/22/02	17:22:04	87.478
07/22/02	17:23:04	87.478
07/22/02	17:24:04	87.193
07/22/02	17:25:04	86.966
07/22/02	17:26:04	86.710
07/22/02	17:27:04	88.587
07/22/02	17:28:04	88.985
07/22/02	17:29:04	87.961
07/22/02	17:30:04	88.672
07/22/02	17:31:04	86.710
07/22/02	17:32:04	87.023
07/22/02	17:33:04	84.520
07/22/02	17:34:04	88.132
07/22/02	17:35:04	86.056
07/22/02	17:36:04	88.615
07/22/02	17:37:04	87.335
07/22/02	17:38:04	85.373
07/22/02	17:39:04	87.819
07/22/02	17:40:04	87.904
07/22/02	17:41:04	85.999
07/22/02	17:42:04	88.103
07/22/02	17:43:04	86.255
07/22/02	17:44:04	85.658
07/22/02	17:45:04	86.880
07/22/02	17:46:04	86.767
07/22/02	17:47:04	86.056
07/22/02	17:48:04	87.705
07/22/02	17:49:04	87.279
07/22/02	17:50:04	85.999
07/22/02	17:51:04	87.279
07/22/02	17:52:04	86.767
07/22/02	17:53:04	87.506
07/22/02	17:54:04	86.681
07/22/02	17:55:04	86.937
07/22/02	17:56:04	85.743
07/22/02	17:57:04	87.023
07/22/02	17:58:04	84.435
07/22/02	17:59:04	86.084
07/22/02	18:00:04	84.406
07/22/02	18:01:04	85.686
07/22/02	18:02:04	85.771
07/22/02	18:03:04	85.458
07/22/02	18:04:04	86.397
07/22/02	18:05:04	85.970
07/22/02	18:06:04	86.397
07/22/02	18:07:04	85.544
07/22/02	18:08:04	86.226
07/22/02	18:09:04	85.999
07/22/02	18:10:04	86.568
07/22/02	18:11:04	86.624
07/22/02	18:12:04	85.515
07/22/02	18:13:04	85.828
07/22/02	18:14:04	85.060
07/22/02	18:15:04	85.970
07/22/02	18:16:04	86.369
07/22/02	18:17:04	87.478
07/22/02	18:18:04	87.961
07/22/02	18:19:04	85.288
07/22/02	18:20:04	85.999
07/22/02	18:21:04	85.970
07/22/02	18:22:04	87.023
07/22/02	18:23:04	86.624
07/22/02	18:24:04	87.506
07/22/02	18:25:04	87.250
07/22/02	18:26:04	86.539
07/22/02	18:27:04	85.999
07/22/02	18:28:04	85.970
07/22/02	18:29:04	87.108
07/22/02	18:30:04	87.563
07/22/02	18:31:04	86.937
07/22/02	18:32:04	86.369
07/22/02	18:33:04	85.970
07/22/02	18:34:04	85.345
07/22/02	18:35:04	86.226
07/22/02	18:36:04	66.689

HOPKINS AND BOBCAT - NO. 7158 cont.

Date	Time	Pres (PSI)	Date	Time	Pres (PSI)	Date	Time	Pres (PSI)	Date	Time	Pres (PSI)
07/22/02	18:37:04	70.670	07/22/02	19:43:04	85.999	07/22/02	20:49:04	85.345	07/22/02	21:55:04	88.587
07/22/02	18:38:04	72.434	07/22/02	19:44:04	85.999	07/22/02	20:50:04	84.662	07/22/02	21:56:04	87.591
07/22/02	18:39:04	71.467	07/22/02	19:45:04	84.492	07/22/02	20:51:04	86.454	07/22/02	21:57:04	87.591
07/22/02	18:40:04	71.950	07/22/02	19:46:04	85.913	07/22/02	20:52:04	85.146	07/22/02	21:58:04	88.132
07/22/02	18:41:04	71.979	07/22/02	19:47:04	85.373	07/22/02	20:53:04	86.056	07/22/02	21:59:04	88.757
07/22/02	18:42:04	83.297	07/22/02	19:48:04	87.250	07/22/02	20:54:04	86.056	07/22/02	22:00:04	88.530
07/22/02	18:43:04	88.274	07/22/02	19:49:04	86.767	07/22/02	20:55:04	86.568	07/22/02	22:01:04	87.563
07/22/02	18:44:04	84.748	07/22/02	19:50:04	86.710	07/22/02	20:56:04	88.445	07/22/02	22:02:04	86.141
07/22/02	18:45:04	86.681	07/22/02	19:51:04	86.937	07/22/02	20:57:04	87.023	07/22/02	22:03:04	87.023
07/22/02	18:46:04	85.828	07/22/02	19:52:04	85.913	07/22/02	20:58:04	87.990	07/22/02	22:04:04	86.084
07/22/02	18:47:04	87.108	07/22/02	19:53:04	85.515	07/22/02	20:59:04	87.563	07/22/02	22:05:04	86.681
07/22/02	18:48:04	82.501	07/22/02	19:54:04	87.193	07/22/02	21:00:04	86.767	07/22/02	22:06:04	87.108
07/22/02	18:49:04	82.615	07/22/02	19:55:04	86.880	07/22/02	21:01:04	87.392	07/22/02	22:07:04	70.756
07/22/02	18:50:04	85.032	07/22/02	19:56:04	86.312	07/22/02	21:02:04	86.795	07/22/02	22:08:04	70.841
07/22/02	18:51:04	84.947	07/22/02	19:57:04	85.345	07/22/02	21:03:04	86.482	07/22/02	22:09:04	80.766
07/22/02	18:52:04	84.492	07/22/02	19:58:04	85.658	07/22/02	21:04:04	85.259	07/22/02	22:10:04	87.165
07/22/02	18:53:04	83.610	07/22/02	19:59:04	86.539	07/22/02	21:05:04	84.264	07/22/02	22:11:04	85.515
07/22/02	18:54:04	85.658	07/22/02	20:00:04	85.771	07/22/02	21:06:04	86.681	07/22/02	22:12:04	86.084
07/22/02	18:55:04	84.093	07/22/02	20:01:04	85.857	07/22/02	21:07:04	84.520	07/22/02	22:13:04	84.890
07/22/02	18:56:04	85.658	07/22/02	20:02:04	85.857	07/22/02	21:08:04	86.397	07/22/02	22:14:04	85.117
07/22/02	18:57:04	84.662	07/22/02	20:03:04	86.312	07/22/02	21:09:04	85.601	07/22/02	22:15:04	85.828
07/22/02	18:58:04	84.406	07/22/02	20:04:04	86.312	07/22/02	21:10:04	86.226	07/22/02	22:16:04	85.515
07/22/02	18:59:04	85.060	07/22/02	20:05:04	85.743	07/22/02	21:11:04	86.397	07/22/02	22:17:04	85.857
07/22/02	19:00:04	81.989	07/22/02	20:06:04	86.397	07/22/02	21:12:04	86.852	07/22/02	22:18:04	86.056
07/22/02	19:01:04	83.695	07/22/02	20:07:04	85.032	07/22/02	21:13:04	85.970	07/22/02	22:19:04	85.117
07/22/02	19:02:04	83.610	07/22/02	20:08:04	87.591	07/22/02	21:14:04	85.913	07/22/02	22:20:04	92.454
07/22/02	19:03:04	83.070	07/22/02	20:09:04	84.662	07/22/02	21:15:04	86.710	07/22/02	22:21:04	88.103
07/22/02	19:04:04	83.866	07/22/02	20:10:04	85.544	07/22/02	21:16:04	85.515	07/22/02	22:22:04	86.312
07/22/02	19:05:04	83.382	07/22/02	20:11:04	87.193	07/22/02	21:17:04	85.913	07/22/02	22:23:04	86.767
07/22/02	19:06:04	82.501	07/22/02	20:12:04	86.141	07/22/02	21:18:04	85.601	07/22/02	22:24:04	87.734
07/22/02	19:07:04	85.259	07/22/02	20:13:04	86.312	07/22/02	21:19:04	87.250	07/22/02	22:25:04	86.397
07/22/02	19:08:04	83.610	07/22/02	20:14:04	85.999	07/22/02	21:20:04	85.828	07/22/02	22:26:04	85.828
07/22/02	19:09:04	84.975	07/22/02	20:15:04	86.056	07/22/02	21:21:04	87.279	07/22/02	22:27:04	85.658
07/22/02	19:10:04	82.359	07/22/02	20:16:04	83.923	07/22/02	21:22:04	86.169	07/22/02	22:28:04	87.250
07/22/02	19:11:04	82.927	07/22/02	20:17:04	86.056	07/22/02	21:23:04	86.084	07/22/02	22:29:04	87.648
07/22/02	19:12:04	89.156	07/22/02	20:18:04	84.435	07/22/02	21:24:04	87.335	07/22/02	22:30:04	87.648
07/22/02	19:13:04	82.700	07/22/02	20:19:04	86.710	07/22/02	21:25:04	88.359	07/22/02	22:31:04	87.591
07/22/02	19:14:04	87.165	07/22/02	20:20:04	84.947	07/22/02	21:26:04	87.108	07/22/02	22:32:04	87.790
07/22/02	19:15:04	86.169	07/22/02	20:21:04	86.255	07/22/02	21:27:04	87.279	07/22/02	22:33:04	87.819
07/22/02	19:16:04	85.970	07/22/02	20:22:04	85.658	07/22/02	21:28:04	85.515	07/22/02	22:34:04	87.478
07/22/02	19:17:04	87.193	07/22/02	20:23:04	86.084	07/22/02	21:29:04	86.084	07/22/02	22:35:04	88.501
07/22/02	19:18:04	84.975	07/22/02	20:24:04	86.169	07/22/02	21:30:04	86.482	07/22/02	22:36:04	88.302
07/22/02	19:19:04	86.226	07/22/02	20:25:04	86.312	07/22/02	21:31:04	87.108	07/22/02	22:37:04	89.696
07/22/02	19:20:04	85.458	07/22/02	20:26:04	87.079	07/22/02	21:32:04	85.686	07/22/02	22:38:04	87.335
07/22/02	19:21:04	85.999	07/22/02	20:27:04	86.852	07/22/02	21:33:04	86.369	07/22/02	22:39:04	89.013
07/22/02	19:22:04	86.624	07/22/02	20:28:04	86.539	07/22/02	21:34:04	85.601	07/22/02	22:40:04	89.525
07/22/02	19:23:04	86.056	07/22/02	20:29:04	85.771	07/22/02	21:35:04	87.279	07/22/02	22:41:04	89.127
07/22/02	19:24:04	85.686	07/22/02	20:30:04	85.970	07/22/02	21:36:04	85.430	07/22/02	22:42:04	89.952
07/22/02	19:25:04	86.056	07/22/02	20:31:04	86.710	07/22/02	21:37:04	87.079	07/22/02	22:43:04	90.322
07/22/02	19:26:04	85.146	07/22/02	20:32:04	85.203	07/22/02	21:38:04	87.165	07/22/02	22:44:04	88.530
07/22/02	19:27:04	85.913	07/22/02	20:33:04	86.056	07/22/02	21:39:04	86.568	07/22/02	22:45:04	88.445
07/22/02	19:28:04	85.544	07/22/02	20:34:04	86.795	07/22/02	21:40:04	87.193	07/22/02	22:46:04	88.985
07/22/02	19:29:04	84.975	07/22/02	20:35:04	85.658	07/22/02	21:41:04	87.079	07/22/02	22:47:04	89.696
07/22/02	19:30:04	87.023	07/22/02	20:36:04	85.345	07/22/02	21:42:04	88.217	07/22/02	22:48:04	89.013
07/22/02	19:31:04	86.056	07/22/02	20:37:04	85.999	07/22/02	21:43:04	86.852	07/22/02	22:49:04	89.468
07/22/02	19:32:04	86.312	07/22/02	20:38:04	84.975	07/22/02	21:44:04	86.454	07/22/02	22:50:04	88.757
07/22/02	19:33:04	85.970	07/22/02	20:39:04	85.828	07/22/02	21:45:04	86.141	07/22/02	22:51:04	88.843
07/22/02	19:34:04	85.970	07/22/02	20:40:04	85.345	07/22/02	21:46:04	87.165	07/22/02	22:52:04	88.843
07/22/02	19:35:04	84.804	07/22/02	20:41:04	85.601	07/22/02	21:47:04	86.681	07/22/02	22:53:04	89.952
07/22/02	19:36:04	86.624	07/22/02	20:42:04	85.601	07/22/02	21:48:04	87.108	07/22/02	22:54:04	90.407
07/22/02	19:37:04	86.056	07/22/02	20:43:04	85.857	07/22/02	21:49:04	87.079	07/22/02	22:55:04	75.135
07/22/02	19:38:04	84.804	07/22/02	20:44:04	86.056	07/22/02	21:50:04	87.421	07/22/02	22:56:04	77.410
07/22/02	19:39:04	86.681	07/22/02	20:45:04	86.226	07/22/02	21:51:04	89.070	07/22/02	22:57:04	78.263
07/22/02	19:40:04	85.686	07/22/02	20:46:04	85.686	07/22/02	21:52:04	88.501	07/22/02	22:58:04	74.879
07/22/02	19:41:04	86.937	07/22/02	20:47:04	84.662	07/22/02	21:53:04	87.904	07/22/02	22:59:04	75.676
07/22/02	19:42:04	86.312	07/22/02	20:48:04	86.852	07/22/02	21:54:04	88.843	07/22/02	23:00:04	82.785

HOPKINS AND BOBCAT - NO. 7158 cont.

Date	Time	Pres (PSI)	Date	Time	Pres (PSI)	Date	Time	Pres (PSI)	Date	Time	Pres (PSI)
07/22/02	23:01:04	88.587	07/23/02	00:07:04	89.554	07/23/02	01:13:04	84.264	07/23/02	02:19:04	92.597
07/22/02	23:02:04	86.795	07/23/02	00:08:04	89.639	07/23/02	01:14:04	87.591	07/23/02	02:20:04	92.597
07/22/02	23:03:04	85.913	07/23/02	00:09:04	90.265	07/23/02	01:15:04	91.658	07/23/02	02:21:04	92.483
07/22/02	23:04:04	87.079	07/23/02	00:10:04	90.407	07/23/02	01:16:04	91.914	07/23/02	02:22:04	92.796
07/22/02	23:05:04	86.966	07/23/02	00:11:04	90.435	07/23/02	01:17:04	91.829	07/23/02	02:23:04	93.251
07/22/02	23:06:04	86.226	07/23/02	00:12:04	93.194	07/23/02	01:18:04	92.312	07/23/02	02:24:04	91.971
07/22/02	23:07:04	86.454	07/23/02	00:13:04	91.516	07/23/02	01:19:04	91.914	07/23/02	02:25:04	92.682
07/22/02	23:08:04	86.539	07/23/02	00:14:04	91.516	07/23/02	01:20:04	92.085	07/23/02	02:26:04	92.682
07/22/02	23:09:04	86.226	07/23/02	00:15:04	91.914	07/23/02	01:21:04	92.369	07/23/02	02:27:04	92.767
07/22/02	23:10:04	85.430	07/23/02	00:16:04	92.284	07/23/02	01:22:04	91.687	07/23/02	02:28:04	92.284
07/22/02	23:11:04	86.795	07/23/02	00:17:04	91.687	07/23/02	01:23:04	92.085	07/23/02	02:29:04	91.829
07/22/02	23:12:04	87.108	07/23/02	00:18:04	91.431	07/23/02	01:24:04	91.175	07/23/02	02:30:04	91.971
07/22/02	23:13:04	86.454	07/23/02	00:19:04	91.829	07/23/02	01:25:04	91.999	07/23/02	02:31:04	92.710
07/22/02	23:14:04	87.108	07/23/02	00:20:04	92.625	07/23/02	01:26:04	91.743	07/23/02	02:32:04	92.483
07/22/02	23:15:04	86.084	07/23/02	00:21:04	91.914	07/23/02	01:27:04	91.573	07/23/02	02:33:04	91.829
07/22/02	23:16:04	86.681	07/23/02	00:22:04	91.431	07/23/02	01:28:04	91.914	07/23/02	02:34:04	92.938
07/22/02	23:17:04	87.023	07/23/02	00:23:04	92.483	07/23/02	01:29:04	91.743	07/23/02	02:35:04	91.829
07/22/02	23:18:04	86.568	07/23/02	00:24:04	91.914	07/23/02	01:30:04	92.682	07/23/02	02:36:04	92.142
07/22/02	23:19:04	87.819	07/23/02	00:25:04	92.597	07/23/02	01:31:04	91.914	07/23/02	02:37:04	92.056
07/22/02	23:20:04	86.795	07/23/02	00:26:04	91.971	07/23/02	01:32:04	91.914	07/23/02	02:38:04	93.080
07/22/02	23:21:04	86.937	07/23/02	00:27:04	91.886	07/23/02	01:33:04	92.454	07/23/02	02:39:04	92.312
07/22/02	23:22:04	86.681	07/23/02	00:28:04	91.971	07/23/02	01:34:04	91.829	07/23/02	02:40:04	92.483
07/22/02	23:23:04	87.193	07/23/02	00:29:04	92.170	07/23/02	01:35:04	92.682	07/23/02	02:41:04	93.165
07/22/02	23:24:04	86.169	07/23/02	00:30:04	91.829	07/23/02	01:36:04	91.374	07/23/02	02:42:04	92.398
07/22/02	23:25:04	86.966	07/23/02	00:31:04	91.914	07/23/02	01:37:04	92.142	07/23/02	02:43:04	92.312
07/22/02	23:26:04	86.710	07/23/02	00:32:04	91.573	07/23/02	01:38:04	92.540	07/23/02	02:44:04	91.516
07/22/02	23:27:04	86.795	07/23/02	00:33:04	92.170	07/23/02	01:39:04	92.085	07/23/02	02:45:04	91.829
07/22/02	23:28:04	87.023	07/23/02	00:34:04	90.549	07/23/02	01:40:04	92.170	07/23/02	02:46:04	91.971
07/22/02	23:29:04	87.478	07/23/02	00:35:04	92.454	07/23/02	01:41:04	92.227	07/23/02	02:47:04	91.829
07/22/02	23:30:04	87.961	07/23/02	00:36:04	91.345	07/23/02	01:42:04	92.284	07/23/02	02:48:04	91.687
07/22/02	23:31:04	86.710	07/23/02	00:37:04	91.743	07/23/02	01:43:04	92.170	07/23/02	02:49:04	92.369
07/22/02	23:32:04	87.023	07/23/02	00:38:04	92.483	07/23/02	01:44:04	91.914	07/23/02	02:50:04	92.853
07/22/02	23:33:04	86.255	07/23/02	00:39:04	91.971	07/23/02	01:45:04	92.796	07/23/02	02:51:04	91.999
07/22/02	23:34:04	87.079	07/23/02	00:40:04	91.999	07/23/02	01:46:04	92.597	07/23/02	02:52:04	92.938
07/22/02	23:35:04	86.852	07/23/02	00:41:04	91.914	07/23/02	01:47:04	91.971	07/23/02	02:53:04	92.227
07/22/02	23:36:04	86.624	07/23/02	00:42:04	91.743	07/23/02	01:48:04	92.881	07/23/02	02:54:04	91.886
07/22/02	23:37:04	93.734	07/23/02	00:43:04	92.312	07/23/02	01:49:04	92.710	07/23/02	02:55:04	92.170
07/22/02	23:38:04	88.985	07/23/02	00:44:04	91.601	07/23/02	01:50:04	92.796	07/23/02	02:56:04	91.743
07/22/02	23:39:04	89.468	07/23/02	00:45:04	91.431	07/23/02	01:51:04	93.023	07/23/02	02:57:04	92.142
07/22/02	23:40:04	89.781	07/23/02	00:46:04	92.483	07/23/02	01:52:04	92.767	07/23/02	02:58:04	91.999
07/22/02	23:41:04	89.127	07/23/02	00:47:04	91.573	07/23/02	01:53:04	92.796	07/23/02	02:59:04	92.398
07/22/02	23:42:04	89.639	07/23/02	00:48:04	92.170	07/23/02	01:54:04	93.421	07/23/02	03:00:04	92.170
07/22/02	23:43:04	89.696	07/23/02	00:49:04	92.540	07/23/02	01:55:04	92.853	07/23/02	03:01:04	91.743
07/22/02	23:44:04	89.525	07/23/02	00:50:04	92.142	07/23/02	01:56:04	93.308	07/23/02	03:02:04	91.743
07/22/02	23:45:04	88.302	07/23/02	00:51:04	91.886	07/23/02	01:57:04	92.710	07/23/02	03:03:04	91.203
07/22/02	23:46:04	89.866	07/23/02	00:52:04	91.914	07/23/02	01:58:04	92.625	07/23/02	03:04:04	91.999
07/22/02	23:47:04	89.554	07/23/02	00:53:04	92.312	07/23/02	01:59:04	92.284	07/23/02	03:05:04	92.284
07/22/02	23:48:04	89.923	07/23/02	00:54:04	91.999	07/23/02	02:00:04	92.454	07/23/02	03:06:04	92.312
07/22/02	23:49:04	90.748	07/23/02	00:55:04	91.971	07/23/02	02:01:04	92.767	07/23/02	03:07:04	92.398
07/22/02	23:50:04	90.265	07/23/02	00:56:04	92.483	07/23/02	02:02:04	92.540	07/23/02	03:08:04	92.284
07/22/02	23:51:04	90.265	07/23/02	00:57:04	92.369	07/23/02	02:03:04	91.886	07/23/02	03:09:04	93.023
07/22/02	23:52:04	89.611	07/23/02	00:58:04	91.772	07/23/02	02:04:04	93.080	07/23/02	03:10:04	92.454
07/22/02	23:53:04	90.663	07/23/02	00:59:04	92.767	07/23/02	02:05:04	92.597	07/23/02	03:11:04	92.369
07/22/02	23:54:04	89.639	07/23/02	01:00:04	91.886	07/23/02	02:06:04	92.625	07/23/02	03:12:04	92.142
07/22/02	23:55:04	89.156	07/23/02	01:01:04	91.829	07/23/02	02:07:04	92.369	07/23/02	03:13:04	92.227
07/22/02	23:56:04	90.094	07/23/02	01:02:04	92.056	07/23/02	02:08:04	92.398	07/23/02	03:14:04	92.398
07/22/02	23:57:04	89.554	07/23/02	01:03:04	92.454	07/23/02	02:09:04	92.682	07/23/02	03:15:04	92.995
07/22/02	23:58:04	90.862	07/23/02	01:04:04	91.914	07/23/02	02:10:04	92.710	07/23/02	03:16:04	91.516
07/22/02	23:59:04	89.781	07/23/02	01:05:04	92.398	07/23/02	02:11:04	91.118	07/23/02	03:17:04	92.284
07/23/02	00:00:04	90.094	07/23/02	01:06:04	90.947	07/23/02	02:12:04	92.056	07/23/02	03:18:04	92.085
07/23/02	00:01:04	90.862	07/23/02	01:07:04	91.573	07/23/02	02:13:04	93.023	07/23/02	03:19:04	92.369
07/23/02	00:02:04	89.696	07/23/02	01:08:04	91.743	07/23/02	02:14:04	92.454	07/23/02	03:20:04	91.687
07/23/02	00:03:04	90.748	07/23/02	01:09:04	91.914	07/23/02	02:15:04	91.886	07/23/02	03:21:04	91.971
07/23/02	00:04:04	90.094	07/23/02	01:10:04	92.142	07/23/02	02:16:04	92.284	07/23/02	03:22:04	92.170
07/23/02	00:05:04	90.577	07/23/02	01:11:04	91.886	07/23/02	02:17:04	92.540	07/23/02	03:23:04	91.914
07/23/02	00:06:04	90.720	07/23/02	01:12:04	78.605	07/23/02	02:18:04	92.625	07/23/02	03:24:04	92.312

HOPKINS AND BOBCAT - NO. 7158 cont.

Date	Time	Pres (PSI)	Date	Time	Pres (PSI)	Date	Time	Pres (PSI)	Date	Time	Pres (PSI)
07/23/02	03:25:04	91.516	07/23/02	04:31:04	91.971	07/23/02	05:37:04	84.748	07/23/02	06:43:04	87.478
07/23/02	03:26:04	90.720	07/23/02	04:32:04	91.658	07/23/02	05:38:04	83.240	07/23/02	06:44:04	87.023
07/23/02	03:27:04	92.369	07/23/02	04:33:04	91.971	07/23/02	05:39:04	83.070	07/23/02	06:45:04	87.990
07/23/02	03:28:04	91.886	07/23/02	04:34:04	91.999	07/23/02	05:40:04	83.240	07/23/02	06:46:04	87.563
07/23/02	03:29:04	92.369	07/23/02	04:35:04	92.056	07/23/02	05:41:04	84.435	07/23/02	06:47:04	87.023
07/23/02	03:30:04	93.080	07/23/02	04:36:04	92.284	07/23/02	05:42:04	83.013	07/23/02	06:48:04	88.359
07/23/02	03:31:04	92.142	07/23/02	04:37:04	92.170	07/23/02	05:43:04	82.671	07/23/02	06:49:04	87.990
07/23/02	03:32:04	92.369	07/23/02	04:38:04	91.687	07/23/02	05:44:04	83.382	07/23/02	06:50:04	86.852
07/23/02	03:33:04	92.483	07/23/02	04:39:04	91.999	07/23/02	05:45:04	83.610	07/23/02	06:51:04	87.421
07/23/02	03:34:04	92.312	07/23/02	04:40:04	92.312	07/23/02	05:46:04	82.671	07/23/02	06:52:04	87.193
07/23/02	03:35:04	92.938	07/23/02	04:41:04	91.687	07/23/02	05:47:04	81.818	07/23/02	06:53:04	86.852
07/23/02	03:36:04	92.398	07/23/02	04:42:04	92.056	07/23/02	05:48:04	80.880	07/23/02	06:54:04	87.079
07/23/02	03:37:04	92.995	07/23/02	04:43:04	92.312	07/23/02	05:49:04	79.287	07/23/02	06:55:04	87.279
07/23/02	03:38:04	92.398	07/23/02	04:44:04	93.023	07/23/02	05:50:04	98.910	07/23/02	06:56:04	87.165
07/23/02	03:39:04	92.938	07/23/02	04:45:04	92.483	07/23/02	05:51:04	91.999	07/23/02	06:57:04	86.681
07/23/02	03:40:04	92.085	07/23/02	04:46:04	91.601	07/23/02	05:52:04	89.724	07/23/02	06:58:04	88.274
07/23/02	03:41:04	92.881	07/23/02	04:47:04	92.227	07/23/02	05:53:04	90.265	07/23/02	06:59:04	86.681
07/23/02	03:42:04	92.056	07/23/02	04:48:04	91.914	07/23/02	05:54:04	90.634	07/23/02	07:00:04	86.568
07/23/02	03:43:04	92.454	07/23/02	04:49:04	92.454	07/23/02	05:55:04	91.374	07/23/02	07:01:04	86.084
07/23/02	03:44:04	91.886	07/23/02	04:50:04	91.886	07/23/02	05:56:04	90.037	07/23/02	07:02:04	85.771
07/23/02	03:45:04	92.227	07/23/02	04:51:04	91.886	07/23/02	05:57:04	90.577	07/23/02	07:03:04	86.084
07/23/02	03:46:04	92.284	07/23/02	04:52:04	91.914	07/23/02	05:58:04	91.061	07/23/02	07:04:04	87.193
07/23/02	03:47:04	91.999	07/23/02	04:53:04	91.658	07/23/02	05:59:04	89.866	07/23/02	07:05:04	85.117
07/23/02	03:48:04	91.658	07/23/02	04:54:04	91.288	07/23/02	06:00:04	90.322	07/23/02	07:06:04	86.454
07/23/02	03:49:04	92.483	07/23/02	04:55:04	91.658	07/23/02	06:01:04	90.179	07/23/02	07:07:04	86.681
07/23/02	03:50:04	92.540	07/23/02	04:56:04	91.999	07/23/02	06:02:04	89.724	07/23/02	07:08:04	86.852
07/23/02	03:51:04	92.284	07/23/02	04:57:04	92.312	07/23/02	06:03:04	89.724	07/23/02	07:09:04	85.857
07/23/02	03:52:04	91.829	07/23/02	04:58:04	92.085	07/23/02	06:04:04	88.217	07/23/02	07:10:04	85.828
07/23/02	03:53:04	91.886	07/23/02	04:59:04	88.814	07/23/02	06:05:04	87.392	07/23/02	07:11:04	86.056
07/23/02	03:54:04	91.886	07/23/02	05:00:04	85.430	07/23/02	06:06:04	89.326	07/23/02	07:12:04	85.999
07/23/02	03:55:04	92.483	07/23/02	05:01:04	88.814	07/23/02	06:07:04	88.701	07/23/02	07:13:04	84.349
07/23/02	03:56:04	92.142	07/23/02	05:02:04	89.241	07/23/02	06:08:04	89.326	07/23/02	07:14:04	85.373
07/23/02	03:57:04	92.170	07/23/02	05:03:04	89.070	07/23/02	06:09:04	89.611	07/23/02	07:15:04	84.890
07/23/02	03:58:04	92.227	07/23/02	05:04:04	88.302	07/23/02	06:10:04	89.241	07/23/02	07:16:04	83.382
07/23/02	03:59:04	91.743	07/23/02	05:05:04	88.843	07/23/02	06:11:04	89.639	07/23/02	07:17:04	83.326
07/23/02	04:00:04	91.374	07/23/02	05:06:04	88.416	07/23/02	06:12:04	89.525	07/23/02	07:18:04	84.008
07/23/02	04:01:04	91.345	07/23/02	05:07:04	87.876	07/23/02	06:13:04	90.037	07/23/02	07:19:04	84.435
07/23/02	04:02:04	91.573	07/23/02	05:08:04	87.961	07/23/02	06:14:04	89.383	07/23/02	07:20:04	85.430
07/23/02	04:03:04	91.772	07/23/02	05:09:04	87.335	07/23/02	06:15:04	88.985	07/23/02	07:21:04	85.458
07/23/02	04:04:04	91.687	07/23/02	05:10:04	86.767	07/23/02	06:16:04	88.985	07/23/02	07:22:04	83.724
07/23/02	04:05:04	92.142	07/23/02	05:11:04	86.852	07/23/02	06:17:04	88.928	07/23/02	07:23:04	86.141
07/23/02	04:06:04	91.516	07/23/02	05:12:04	86.454	07/23/02	06:18:04	89.013	07/23/02	07:24:04	86.169
07/23/02	04:07:04	92.142	07/23/02	05:13:04	86.624	07/23/02	06:19:04	89.070	07/23/02	07:25:04	86.169
07/23/02	04:08:04	91.999	07/23/02	05:14:04	87.079	07/23/02	06:20:04	89.383	07/23/02	07:26:04	85.658
07/23/02	04:09:04	91.914	07/23/02	05:15:04	86.767	07/23/02	06:21:04	88.615	07/23/02	07:27:04	85.743
07/23/02	04:10:04	92.227	07/23/02	05:16:04	86.767	07/23/02	06:22:04	88.814	07/23/02	07:28:04	84.435
07/23/02	04:11:04	92.312	07/23/02	05:17:04	86.966	07/23/02	06:23:04	87.734	07/23/02	07:29:04	86.482
07/23/02	04:12:04	91.573	07/23/02	05:18:04	87.250	07/23/02	06:24:04	89.525	07/23/02	07:30:04	86.624
07/23/02	04:13:04	92.597	07/23/02	05:19:04	86.539	07/23/02	06:25:04	70.443	07/23/02	07:31:04	86.169
07/23/02	04:14:04	92.284	07/23/02	05:20:04	87.079	07/23/02	06:26:04	74.936	07/23/02	07:32:04	84.833
07/23/02	04:15:04	91.999	07/23/02	05:21:04	86.795	07/23/02	06:27:04	78.889	07/23/02	07:33:04	85.430
07/23/02	04:16:04	92.085	07/23/02	05:22:04	86.767	07/23/02	06:28:04	88.217	07/23/02	07:34:04	85.259
07/23/02	04:17:04	92.284	07/23/02	05:23:04	86.937	07/23/02	06:29:04	88.672	07/23/02	07:35:04	87.079
07/23/02	04:18:04	91.999	07/23/02	05:24:04	86.624	07/23/02	06:30:04	87.335	07/23/02	07:36:04	85.430
07/23/02	04:19:04	92.056	07/23/02	05:25:04	86.482	07/23/02	06:31:04	88.814	07/23/02	07:37:04	86.767
07/23/02	04:20:04	92.170	07/23/02	05:26:04	86.767	07/23/02	06:32:04	88.672	07/23/02	07:38:04	87.165
07/23/02	04:21:04	92.454	07/23/02	05:27:04	85.515	07/23/02	06:33:04	87.904	07/23/02	07:39:04	85.857
07/23/02	04:22:04	92.312	07/23/02	05:28:04	84.093	07/23/02	06:34:04	86.937	07/23/02	07:40:04	88.530
07/23/02	04:23:04	92.312	07/23/02	05:29:04	84.748	07/23/02	06:35:04	87.990	07/23/02	07:41:04	87.193
07/23/02	04:24:04	91.829	07/23/02	05:30:04	85.743	07/23/02	06:36:04	87.023	07/23/02	07:42:04	87.478
07/23/02	04:25:04	92.085	07/23/02	05:31:04	84.634	07/23/02	06:37:04	87.876	07/23/02	07:43:04	87.876
07/23/02	04:26:04	91.971	07/23/02	05:32:04	84.748	07/23/02	06:38:04	87.108	07/23/02	07:44:04	87.961
07/23/02	04:27:04	91.999	07/23/02	05:33:04	85.060	07/23/02	06:39:04	88.359	07/23/02	07:45:04	87.648
07/23/02	04:28:04	92.056	07/23/02	05:34:04	84.947	07/23/02	06:40:04	87.904	07/23/02	07:46:04	87.421
07/23/02	04:29:04	91.658	07/23/02	05:35:04	84.662	07/23/02	06:41:04	87.563	07/23/02	07:47:04	87.023
07/23/02	04:30:04	91.658	07/23/02	05:36:04	85.117	07/23/02	06:42:04	86.937	07/23/02	07:48:04	87.961

HOPKINS AND BOBCAT - NO. 7158 cont.

Date	Time	Pres (PSI)
07/23/02	07:49:04	88.217
07/23/02	07:50:04	87.790
07/23/02	07:51:04	87.478
07/23/02	07:52:04	88.132
07/23/02	07:53:04	88.672
07/23/02	07:54:04	87.990
07/23/02	07:55:04	87.790
07/23/02	07:56:04	86.141
07/23/02	07:57:04	86.880
07/23/02	07:58:04	86.852
07/23/02	07:59:04	86.539
07/23/02	08:00:04	87.079
07/23/02	08:01:04	88.587
07/23/02	08:02:04	88.501
07/23/02	08:03:04	87.193
07/23/02	08:04:04	88.757
07/23/02	08:05:04	88.501
07/23/02	08:06:04	86.852
07/23/02	08:07:04	87.108
07/23/02	08:08:04	86.539
07/23/02	08:09:04	86.966
07/23/02	08:10:04	86.795
07/23/02	08:11:04	88.416
07/23/02	08:12:04	89.326
07/23/02	08:13:04	88.701
07/23/02	08:14:04	87.904
07/23/02	08:15:04	88.445
07/23/02	08:16:04	90.037
07/23/02	08:17:04	88.132
07/23/02	08:18:04	88.701
07/23/02	08:19:04	85.743
07/23/02	08:20:04	88.701
07/23/02	08:21:04	88.046
07/23/02	08:22:04	89.611
07/23/02	08:23:04	87.023
07/23/02	08:24:04	88.928
07/23/02	08:25:04	88.302
07/23/02	08:26:04	89.070
07/23/02	08:27:04	88.445
07/23/02	08:28:04	88.217
07/23/02	08:29:04	86.255
07/23/02	08:30:04	89.070
07/23/02	08:31:04	87.819
07/23/02	08:32:04	88.359
07/23/02	08:33:04	87.250
07/23/02	08:34:04	87.705
07/23/02	08:35:04	88.274
07/23/02	08:36:04	88.103
07/23/02	08:37:04	87.478
07/23/02	08:38:04	88.445
07/23/02	08:39:04	87.563
07/23/02	08:40:04	87.648
07/23/02	08:41:04	87.335
07/23/02	08:42:04	86.937
07/23/02	08:43:04	88.757
07/23/02	08:44:04	88.132
07/23/02	08:45:04	82.387
07/23/02	08:46:04	83.866
07/23/02	08:47:04	84.634
07/23/02	08:48:04	82.927
07/23/02	08:49:04	83.070
07/23/02	08:50:04	85.913
07/23/02	08:51:04	84.236
07/23/02	08:52:04	86.937
07/23/02	08:53:04	86.255
07/23/02	08:54:04	85.288
07/23/02	08:55:04	85.515
07/23/02	08:56:04	86.568
07/23/02	08:57:04	85.345
07/23/02	08:58:04	86.084
07/23/02	08:59:04	78.178
07/23/02	09:00:04	75.420
07/23/02	09:01:04	76.870
07/23/02	09:02:04	75.021
07/23/02	09:03:04	72.405
07/23/02	09:04:04	76.301
07/23/02	09:05:04	75.647
07/23/02	09:06:04	76.358
07/23/02	09:07:04	75.021
07/23/02	09:08:04	75.732
07/23/02	09:09:04	73.941
07/23/02	09:10:04	74.709
07/23/02	09:11:04	73.429
07/23/02	09:12:04	73.713
07/23/02	09:13:04	73.941
07/23/02	09:14:04	75.192
07/23/02	09:15:04	73.998
07/23/02	09:16:04	74.936
07/23/02	09:17:04	74.396
07/23/02	09:18:04	73.827
07/23/02	09:19:04	75.277
07/23/02	09:20:04	74.254
07/23/02	09:21:04	73.912
07/23/02	09:22:04	72.689
07/23/02	09:23:04	76.045
07/23/02	09:24:04	76.387
07/23/02	09:25:04	79.998
07/23/02	09:26:04	86.937
07/23/02	09:27:04	85.515
07/23/02	09:28:04	85.686
07/23/02	09:29:04	85.601
07/23/02	09:30:04	86.255
07/23/02	09:31:04	85.828
07/23/02	09:32:04	86.454
07/23/02	09:33:04	85.743
07/23/02	09:34:04	85.458
07/23/02	09:35:04	84.093
07/23/02	09:36:04	84.264
07/23/02	09:37:04	85.686
07/23/02	09:38:04	86.795
07/23/02	09:39:04	84.264
07/23/02	09:40:04	86.880
07/23/02	09:41:04	85.913
07/23/02	09:42:04	86.624
07/23/02	09:43:04	85.458
07/23/02	09:44:04	86.312
07/23/02	09:45:04	87.108
07/23/02	09:46:04	87.819
07/23/02	09:47:04	86.482
07/23/02	09:48:04	85.515
07/23/02	09:49:04	87.079
07/23/02	09:50:04	86.255
07/23/02	09:51:04	88.701
07/23/02	09:52:04	87.563
07/23/02	09:53:04	86.482
07/23/02	09:54:04	87.990
07/23/02	09:55:04	85.601
07/23/02	09:56:04	83.212
07/23/02	09:57:04	84.748
07/23/02	09:58:04	83.553
07/23/02	09:59:04	82.359
07/23/02	10:00:04	83.781
07/23/02	10:01:04	82.984
07/23/02	10:02:04	84.122
07/23/02	10:03:04	84.577
07/23/02	10:04:04	83.382
07/23/02	10:05:04	84.236
07/23/02	10:06:04	82.586
07/23/02	10:07:04	81.193
07/23/02	10:08:04	82.899
07/23/02	10:09:04	81.477
07/23/02	10:10:04	81.989
07/23/02	10:11:04	82.899
07/23/02	10:12:04	83.212
07/23/02	10:13:04	81.193
07/23/02	10:14:04	82.501
07/23/02	10:15:04	83.240
07/23/02	10:16:04	83.525
07/23/02	10:17:04	83.297
07/23/02	10:18:04	83.155
07/23/02	10:19:04	80.453
07/23/02	10:20:04	84.122
07/23/02	10:21:04	86.852
07/23/02	10:22:04	88.843
07/23/02	10:23:04	85.970
07/23/02	10:24:04	87.478
07/23/02	10:25:04	89.013
07/23/02	10:26:04	87.193
07/23/02	10:27:04	87.279
07/23/02	10:28:04	87.734
07/23/02	10:29:04	85.658
07/23/02	10:30:04	84.833
07/23/02	10:31:04	85.686
07/23/02	10:32:04	86.312
07/23/02	10:33:04	86.795
07/23/02	10:34:04	84.093
07/23/02	10:35:04	86.795
07/23/02	10:36:04	87.904
07/23/02	10:37:04	86.539
07/23/02	10:38:04	87.506
07/23/02	10:39:04	86.852
07/23/02	10:40:04	86.084
07/23/02	10:41:04	85.288
07/23/02	10:42:04	88.928
07/23/02	10:43:04	86.482
07/23/02	10:44:04	87.478
07/23/02	10:45:04	87.392
07/23/02	10:46:04	85.544
07/23/02	10:47:04	85.032
07/23/02	10:48:04	85.771
07/23/02	10:49:04	84.577
07/23/02	10:50:04	84.435
07/23/02	10:51:04	83.724
07/23/02	10:52:04	84.179
07/23/02	10:53:04	85.146
07/23/02	10:54:04	85.373
07/23/02	10:55:04	85.259
07/23/02	10:56:04	84.890
07/23/02	10:57:04	82.671
07/23/02	10:58:04	84.406
07/23/02	10:59:04	87.023
07/23/02	11:00:04	82.700
07/23/02	11:01:04	83.155
07/23/02	11:02:04	84.435
07/23/02	11:03:04	83.638
07/23/02	11:04:04	83.724
07/23/02	11:05:04	83.155
07/23/02	11:06:04	58.868
07/23/02	11:07:04	83.525
07/23/02	11:08:04	83.070
07/23/02	11:09:04	82.671
07/23/02	11:10:04	84.435
07/23/02	11:11:04	84.179
07/23/02	11:12:04	83.297
07/23/02	11:13:04	83.468
07/23/02	11:14:04	84.833
07/23/02	11:15:04	83.411
07/23/02	11:16:04	83.525
07/23/02	11:17:04	81.818
07/23/02	11:18:04	83.610
07/23/02	11:19:04	82.615
07/23/02	11:20:04	82.444
07/23/02	11:21:04	83.326
07/23/02	11:22:04	83.382
07/23/02	11:23:04	83.212
07/23/02	11:24:04	83.013
07/23/02	11:25:04	84.577
07/23/02	11:26:04	82.984
07/23/02	11:27:04	82.074
07/23/02	11:28:04	83.951
07/23/02	11:29:04	83.866
07/23/02	11:30:04	84.748
07/23/02	11:31:04	83.866
07/23/02	11:32:04	85.601
07/23/02	11:33:04	86.141
07/23/02	11:34:04	82.586
07/23/02	11:35:04	85.828
07/23/02	11:36:04	86.937
07/23/02	11:37:04	84.634
07/23/02	11:38:04	83.809
07/23/02	11:39:04	85.117
07/23/02	11:40:04	84.719
07/23/02	11:41:04	85.515
07/23/02	11:42:04	86.681
07/23/02	11:43:04	84.662
07/23/02	11:44:04	84.577
07/23/02	11:45:04	85.259
07/23/02	11:46:04	86.397
07/23/02	11:47:04	85.259
07/23/02	11:48:04	84.349
07/23/02	11:49:04	85.828
07/23/02	11:50:04	85.032
07/23/02	11:51:04	86.141
07/23/02	11:52:04	85.601
07/23/02	11:53:04	83.695
07/23/02	11:54:04	84.975
07/23/02	11:55:04	83.638
07/23/02	11:56:04	85.060
07/23/02	11:57:04	84.662
07/23/02	11:58:04	84.492
07/23/02	11:59:04	84.492
07/23/02	12:00:04	84.492
07/23/02	12:01:04	85.686
07/23/02	12:02:04	84.520
07/23/02	12:03:04	83.695
07/23/02	12:04:04	85.288
07/23/02	12:05:04	83.809
07/23/02	12:06:04	84.748
07/23/02	12:07:04	85.658
07/23/02	12:08:04	84.349
07/23/02	12:09:04	85.373
07/23/02	12:10:04	85.032
07/23/02	12:11:04	85.288
07/23/02	12:12:04	84.748

HOPKINS AND BOBCAT - NO. 7158 cont.

Date	Time	Pres (PSI)
07/23/02	12:13:04	85.515
07/23/02	12:14:04	85.117
07/23/02	12:15:04	84.947
07/23/02	12:16:04	83.610
07/23/02	12:17:04	85.430
07/23/02	12:18:04	84.947
07/23/02	12:19:04	84.662
07/23/02	12:20:04	85.970
07/23/02	12:21:04	86.141
07/23/02	12:22:04	83.553
07/23/02	12:23:04	82.586
07/23/02	12:24:04	85.857
07/23/02	12:25:04	85.259
07/23/02	12:26:04	85.117
07/23/02	12:27:04	84.179
07/23/02	12:28:04	84.122
07/23/02	12:29:04	85.203
07/23/02	12:30:04	84.264
07/23/02	12:31:04	85.913
07/23/02	12:32:04	85.601
07/23/02	12:33:04	85.345
07/23/02	12:34:04	84.890
07/23/02	12:35:04	86.767
07/23/02	12:36:04	86.454
07/23/02	12:37:04	86.397
07/23/02	12:38:04	84.037
07/23/02	12:39:04	86.681
07/23/02	12:40:04	85.288
07/23/02	12:41:04	85.288
07/23/02	12:42:04	84.804
07/23/02	12:43:04	85.458
07/23/02	12:44:04	86.369
07/23/02	12:45:04	86.767
07/23/02	12:46:04	86.795
07/23/02	12:47:04	85.458
07/23/02	12:48:04	86.710
07/23/02	12:49:04	86.681
07/23/02	12:50:04	84.662
07/23/02	12:51:04	85.117
07/23/02	12:52:04	86.880
07/23/02	12:53:04	86.539
07/23/02	12:54:04	86.454
07/23/02	12:55:04	87.279
07/23/02	12:56:04	85.771
07/23/02	12:57:04	83.695
07/23/02	12:58:04	85.913
07/23/02	12:59:04	84.577
07/23/02	13:00:04	84.975
07/23/02	13:01:04	84.833
07/23/02	13:02:04	84.719
07/23/02	13:03:04	85.515
07/23/02	13:04:04	84.975
07/23/02	13:05:04	83.468
07/23/02	13:06:04	84.264
07/23/02	13:07:04	84.833
07/23/02	13:08:04	83.212
07/23/02	13:09:04	86.084
07/23/02	13:10:04	65.580
07/23/02	13:11:04	62.395
07/23/02	13:12:04	60.831
07/23/02	13:13:04	58.840
07/23/02	13:14:04	57.361
07/23/02	13:15:04	58.243
07/23/02	13:16:04	55.939
07/23/02	13:17:04	53.579
07/23/02	13:18:04	52.299
07/23/02	13:19:04	51.531
07/23/02	13:20:04	60.916
07/23/02	13:21:04	64.442
07/23/02	13:22:04	74.566
07/23/02	13:23:04	84.264
07/23/02	13:24:04	84.264
07/23/02	13:25:04	83.468
07/23/02	13:26:04	83.525
07/23/02	13:27:04	85.060
07/23/02	13:28:04	83.382
07/23/02	13:29:04	83.638
07/23/02	13:30:04	83.781
07/23/02	13:31:04	83.638
07/23/02	13:32:04	82.529
07/23/02	13:33:04	83.695
07/23/02	13:34:04	84.037
07/23/02	13:35:04	84.748
07/23/02	13:36:04	83.951
07/23/02	13:37:04	81.989
07/23/02	13:38:04	82.899
07/23/02	13:39:04	83.610
07/23/02	13:40:04	81.363
07/23/02	13:41:04	81.676
07/23/02	13:42:04	82.842
07/23/02	13:43:04	82.359
07/23/02	13:44:04	92.142
07/23/02	13:45:04	87.478
07/23/02	13:46:04	84.719
07/23/02	13:47:04	86.482
07/23/02	13:48:04	85.345
07/23/02	13:49:04	84.236
07/23/02	13:50:04	83.525
07/23/02	13:51:04	85.203
07/23/02	13:52:04	84.236
07/23/02	13:53:04	84.008
07/23/02	13:54:04	86.880
07/23/02	13:55:04	83.638
07/23/02	13:56:04	83.951
07/23/02	13:57:04	84.264
07/23/02	13:58:04	80.851
07/23/02	13:59:04	82.700
07/23/02	14:00:04	82.529
07/23/02	14:01:04	82.046
07/23/02	14:02:04	83.695
07/23/02	14:03:04	82.387
07/23/02	14:04:04	84.435
07/23/02	14:05:04	83.525
07/23/02	14:06:04	84.577
07/23/02	14:07:04	84.634
07/23/02	14:08:04	84.577
07/23/02	14:09:04	83.809
07/23/02	14:10:04	83.951
07/23/02	14:11:04	86.369
07/23/02	14:12:04	85.373
07/23/02	14:13:04	86.056
07/23/02	14:14:04	85.060
07/23/02	14:15:04	85.032
07/23/02	14:16:04	85.032
07/23/02	14:17:04	85.032
07/23/02	14:18:04	86.880
07/23/02	14:19:04	84.890
07/23/02	14:20:04	83.781
07/23/02	14:21:04	85.203
07/23/02	14:22:04	86.312
07/23/02	14:23:04	84.833
07/23/02	14:24:04	85.032
07/23/02	14:25:04	85.117
07/23/02	14:26:04	85.373
07/23/02	14:27:04	84.833
07/23/02	14:28:04	85.203
07/23/02	14:29:04	85.032
07/23/02	14:30:04	85.601
07/23/02	14:31:04	85.203
07/23/02	14:32:04	85.515
07/23/02	14:33:04	84.122
07/23/02	14:34:04	84.349
07/23/02	14:35:04	85.658
07/23/02	14:36:04	83.809
07/23/02	14:37:04	85.146
07/23/02	14:38:04	84.492
07/23/02	14:39:04	84.236
07/23/02	14:40:04	83.525
07/23/02	14:41:04	85.686
07/23/02	14:42:04	85.430
07/23/02	14:43:04	86.482
07/23/02	14:44:04	85.203
07/23/02	14:45:04	57.702
07/23/02	14:46:04	63.305
07/23/02	14:47:04	65.949
07/23/02	14:48:04	80.169
07/23/02	14:49:04	83.525
07/23/02	14:50:04	84.577
07/23/02	14:51:04	81.790
07/23/02	14:52:04	83.411
07/23/02	14:53:04	83.866
07/23/02	14:54:04	83.411
07/23/02	14:55:04	82.074
07/23/02	14:56:04	83.781
07/23/02	14:57:04	80.652
07/23/02	14:58:04	83.923
07/23/02	14:59:04	84.804
07/23/02	15:00:04	83.610
07/23/02	15:01:04	83.809
07/23/02	15:02:04	85.544
07/23/02	15:03:04	84.577
07/23/02	15:04:04	82.046
07/23/02	15:05:04	82.046
07/23/02	15:06:04	82.273
07/23/02	15:07:04	83.809
07/23/02	15:08:04	82.927
07/23/02	15:09:04	84.122
07/23/02	15:10:04	83.695
07/23/02	15:11:04	82.615
07/23/02	15:12:04	83.326
07/23/02	15:13:04	84.435
07/23/02	15:14:04	84.321
07/23/02	15:15:04	83.809
07/23/02	15:16:04	84.037
07/23/02	15:17:04	83.468
07/23/02	15:18:04	84.804
07/23/02	15:19:04	86.539
07/23/02	15:20:04	91.743
07/23/02	15:21:04	85.203
07/23/02	15:22:04	86.710
07/23/02	15:23:04	87.079
07/23/02	15:24:04	88.189
07/23/02	15:25:04	89.298
07/23/02	15:26:04	89.127
07/23/02	15:27:04	85.117
07/23/02	15:28:04	88.445
07/23/02	15:29:04	87.563
07/23/02	15:30:04	88.530
07/23/02	15:31:04	88.274
07/23/02	15:32:04	88.046
07/23/02	15:33:04	89.013
07/23/02	15:34:04	87.990
07/23/02	15:35:04	87.335
07/23/02	15:36:04	87.506
07/23/02	15:37:04	85.658
07/23/02	15:38:04	87.279
07/23/02	15:39:04	88.302
07/23/02	15:40:04	87.506
07/23/02	15:41:04	88.302
07/23/02	15:42:04	86.937
07/23/02	15:43:04	87.335
07/23/02	15:44:04	86.937
07/23/02	15:45:04	89.241
07/23/02	15:46:04	89.383
07/23/02	15:47:04	88.274
07/23/02	15:48:04	88.103
07/23/02	15:49:04	89.639
07/23/02	15:50:04	87.279
07/23/02	15:51:04	89.724
07/23/02	15:52:04	87.990
07/23/02	15:53:04	88.103
07/23/02	15:54:04	87.279
07/23/02	15:55:04	87.165
07/23/02	15:56:04	87.648
07/23/02	15:57:04	88.274
07/23/02	15:58:04	88.103
07/23/02	15:59:04	87.193
07/23/02	16:00:04	88.189
07/23/02	16:01:04	86.312
07/23/02	16:02:04	87.335
07/23/02	16:03:04	87.165
07/23/02	16:04:04	87.023
07/23/02	16:05:04	86.482
07/23/02	16:06:04	87.079
07/23/02	16:07:04	82.586
07/23/02	16:08:04	87.193
07/23/02	16:09:04	84.321
07/23/02	16:10:04	86.454
07/23/02	16:11:04	86.226
07/23/02	16:12:04	86.084
07/23/02	16:13:04	86.454
07/23/02	16:14:04	87.591
07/23/02	16:15:04	87.421
07/23/02	16:16:04	87.335
07/23/02	16:17:04	86.369
07/23/02	16:18:04	87.648
07/23/02	16:19:04	87.478
07/23/02	16:20:04	86.141
07/23/02	16:21:04	87.165
07/23/02	16:22:04	87.648
07/23/02	16:23:04	87.023
07/23/02	16:24:04	72.689
07/23/02	16:25:04	84.349
07/23/02	16:26:04	86.084
07/23/02	16:27:04	88.814
07/23/02	16:28:04	88.189
07/23/02	16:29:04	87.904
07/23/02	16:30:04	87.023
07/23/02	16:31:04	86.624
07/23/02	16:32:04	86.880
07/23/02	16:33:04	87.790
07/23/02	16:34:04	86.681
07/23/02	16:35:04	87.335
07/23/02	16:36:04	86.539

HOPKINS AND BOBCAT - NO. 7158 cont.

Date	Time	Pres (PSI)
07/23/02	16:37:04	86.880
07/23/02	16:38:04	87.421
07/23/02	16:39:04	87.335
07/23/02	16:40:04	88.046
07/23/02	16:41:04	86.852
07/23/02	16:42:04	65.978
07/23/02	16:43:04	66.376
07/23/02	16:44:04	69.049
07/23/02	16:45:04	70.386
07/23/02	16:46:04	69.959
07/23/02	16:47:04	68.879
07/23/02	16:48:04	83.240
07/23/02	16:49:04	87.421
07/23/02	16:50:04	85.515
07/23/02	16:51:04	83.411
07/23/02	16:52:04	84.577
07/23/02	16:53:04	85.857
07/23/02	16:54:04	85.999
07/23/02	16:55:04	83.866
07/23/02	16:56:04	84.492
07/23/02	16:57:04	85.060
07/23/02	16:58:04	85.373
07/23/02	16:59:04	84.349
07/23/02	17:00:04	84.833
07/23/02	17:01:04	84.804
07/23/02	17:02:04	84.321
07/23/02	17:03:04	85.743
07/23/02	17:04:04	84.577
07/23/02	17:05:04	85.857
07/23/02	17:06:04	86.141
07/23/02	17:07:04	83.525
07/23/02	17:08:04	84.179
07/23/02	17:09:04	83.781
07/23/02	17:10:04	92.284
07/23/02	17:11:04	86.710
07/23/02	17:12:04	88.302
07/23/02	17:13:04	86.397
07/23/02	17:14:04	85.544
07/23/02	17:15:04	85.857
07/23/02	17:16:04	86.141
07/23/02	17:17:04	86.084
07/23/02	17:18:04	86.084
07/23/02	17:19:04	86.056
07/23/02	17:20:04	86.226
07/23/02	17:21:04	86.681
07/23/02	17:22:04	86.880
07/23/02	17:23:04	85.458
07/23/02	17:24:04	87.648
07/23/02	17:25:04	86.681
07/23/02	17:26:04	87.904
07/23/02	17:27:04	84.520
07/23/02	17:28:04	87.705
07/23/02	17:29:04	85.060
07/23/02	17:30:04	85.515
07/23/02	17:31:04	85.060
07/23/02	17:32:04	86.624
07/23/02	17:33:04	85.288
07/23/02	17:34:04	84.975
07/23/02	17:35:04	86.369
07/23/02	17:36:04	86.539
07/23/02	17:37:04	86.084
07/23/02	17:38:04	86.966
07/23/02	17:39:04	86.852
07/23/02	17:40:04	84.833
07/23/02	17:41:04	86.852
07/23/02	17:42:04	85.060
07/23/02	17:43:04	86.454
07/23/02	17:44:04	87.108
07/23/02	17:45:04	86.539
07/23/02	17:46:04	86.681
07/23/02	17:47:04	87.648
07/23/02	17:48:04	85.857
07/23/02	17:49:04	87.904
07/23/02	17:50:04	87.250
07/23/02	17:51:04	87.421
07/23/02	17:52:04	86.084
07/23/02	17:53:04	86.681
07/23/02	17:54:04	87.250
07/23/02	17:55:04	84.975
07/23/02	17:56:04	86.539
07/23/02	17:57:04	85.857
07/23/02	17:58:04	87.392
07/23/02	17:59:04	86.312
07/23/02	18:00:04	87.279
07/23/02	18:01:04	86.169
07/23/02	18:02:04	86.767
07/23/02	18:03:04	85.686
07/23/02	18:04:04	87.079
07/23/02	18:05:04	87.392
07/23/02	18:06:04	86.226
07/23/02	18:07:04	87.250
07/23/02	18:08:04	86.169
07/23/02	18:09:04	86.482
07/23/02	18:10:04	87.079
07/23/02	18:11:04	85.060
07/23/02	18:12:04	86.966
07/23/02	18:13:04	87.705
07/23/02	18:14:04	87.734
07/23/02	18:15:04	85.288
07/23/02	18:16:04	86.056
07/23/02	18:17:04	87.904
07/23/02	18:18:04	86.084
07/23/02	18:19:04	86.539
07/23/02	18:20:04	87.421
07/23/02	18:21:04	86.880
07/23/02	18:22:04	84.122
07/23/02	18:23:04	86.141
07/23/02	18:24:04	85.857
07/23/02	18:25:04	85.771
07/23/02	18:26:04	86.710
07/23/02	18:27:04	86.767
07/23/02	18:28:04	86.454
07/23/02	18:29:04	85.743
07/23/02	18:30:04	86.141
07/23/02	18:31:04	87.648
07/23/02	18:32:04	86.169
07/23/02	18:33:04	85.771
07/23/02	18:34:04	86.084
07/23/02	18:35:04	86.169
07/23/02	18:36:04	85.288
07/23/02	18:37:04	86.454
07/23/02	18:38:04	86.226
07/23/02	18:39:04	86.767
07/23/02	18:40:04	85.771
07/23/02	18:41:04	86.084
07/23/02	18:42:04	86.880
07/23/02	18:43:04	87.108
07/23/02	18:44:04	86.056
07/23/02	18:45:04	86.880
07/23/02	18:46:04	88.445
07/23/02	18:47:04	87.421
07/23/02	18:48:04	87.421
07/23/02	18:49:04	86.539
07/23/02	18:50:04	86.141
07/23/02	18:51:04	87.392
07/23/02	18:52:04	86.312
07/23/02	18:53:04	85.828
07/23/02	18:54:04	87.108
07/23/02	18:55:04	85.913
07/23/02	18:56:04	86.624
07/23/02	18:57:04	84.093
07/23/02	18:58:04	85.686
07/23/02	18:59:04	86.369
07/23/02	19:00:04	85.970
07/23/02	19:01:04	86.226
07/23/02	19:02:04	87.990
07/23/02	19:03:04	87.108
07/23/02	19:04:04	87.591
07/23/02	19:05:04	86.539
07/23/02	19:06:04	87.392
07/23/02	19:07:04	86.852
07/23/02	19:08:04	87.279
07/23/02	19:09:04	85.999
07/23/02	19:10:04	86.169
07/23/02	19:11:04	87.335
07/23/02	19:12:04	87.591
07/23/02	19:13:04	87.478
07/23/02	19:14:04	86.568
07/23/02	19:15:04	86.084
07/23/02	19:16:04	86.681
07/23/02	19:17:04	87.279
07/23/02	19:18:04	85.999
07/23/02	19:19:04	87.904
07/23/02	19:20:04	87.478
07/23/02	19:21:04	87.193
07/23/02	19:22:04	86.056
07/23/02	19:23:04	86.255
07/23/02	19:24:04	86.169
07/23/02	19:25:04	86.710
07/23/02	19:26:04	86.624
07/23/02	19:27:04	85.913
07/23/02	19:28:04	86.852
07/23/02	19:29:04	86.454
07/23/02	19:30:04	86.852
07/23/02	19:31:04	85.345
07/23/02	19:32:04	86.767
07/23/02	19:33:04	85.913
07/23/02	19:34:04	86.226
07/23/02	19:35:04	85.458
07/23/02	19:36:04	85.970
07/23/02	19:37:04	86.056
07/23/02	19:38:04	86.312
07/23/02	19:39:04	86.937
07/23/02	19:40:04	86.795
07/23/02	19:41:04	86.056
07/23/02	19:42:04	85.146
07/23/02	19:43:04	85.970
07/23/02	19:44:04	86.397
07/23/02	19:45:04	86.852
07/23/02	19:46:04	86.767
07/23/02	19:47:04	86.312
07/23/02	19:48:04	85.857
07/23/02	19:49:04	85.259
07/23/02	19:50:04	86.369
07/23/02	19:51:04	86.226
07/23/02	19:52:04	87.079
07/23/02	19:53:04	85.345
07/23/02	19:54:04	87.023
07/23/02	19:55:04	85.999
07/23/02	19:56:04	86.568
07/23/02	19:57:04	85.771
07/23/02	19:58:04	87.250
07/23/02	19:59:04	85.544
07/23/02	20:00:04	85.288
07/23/02	20:01:04	85.288
07/23/02	20:02:04	86.397
07/23/02	20:03:04	87.079
07/23/02	20:04:04	86.568
07/23/02	20:05:04	87.193
07/23/02	20:06:04	85.544
07/23/02	20:07:04	86.482
07/23/02	20:08:04	86.454
07/23/02	20:09:04	87.079
07/23/02	20:10:04	85.828
07/23/02	20:11:04	86.397
07/23/02	20:12:04	85.913
07/23/02	20:13:04	86.255
07/23/02	20:14:04	85.601
07/23/02	20:15:04	85.999
07/23/02	20:16:04	87.335
07/23/02	20:17:04	86.795
07/23/02	20:18:04	85.146
07/23/02	20:19:04	84.975
07/23/02	20:20:04	86.255
07/23/02	20:21:04	86.767
07/23/02	20:22:04	86.056
07/23/02	20:23:04	85.345
07/23/02	20:24:04	85.259
07/23/02	20:25:04	86.141
07/23/02	20:26:04	86.084
07/23/02	20:27:04	86.255
07/23/02	20:28:04	86.482
07/23/02	20:29:04	84.236
07/23/02	20:30:04	86.369
07/23/02	20:31:04	85.857
07/23/02	20:32:04	85.999
07/23/02	20:33:04	86.255
07/23/02	20:34:04	86.710
07/23/02	20:35:04	85.430
07/23/02	20:36:04	86.141
07/23/02	20:37:04	86.681
07/23/02	20:38:04	85.743
07/23/02	20:39:04	86.852
07/23/02	20:40:04	86.482
07/23/02	20:41:04	86.795
07/23/02	20:42:04	87.165
07/23/02	20:43:04	87.193
07/23/02	20:44:04	87.250
07/23/02	20:45:04	86.169
07/23/02	20:46:04	86.852
07/23/02	20:47:04	87.506
07/23/02	20:48:04	86.681
07/23/02	20:49:04	86.226
07/23/02	20:50:04	87.279
07/23/02	20:51:04	86.795
07/23/02	20:52:04	84.492
07/23/02	20:53:04	86.255
07/23/02	20:54:04	86.880
07/23/02	20:55:04	86.226
07/23/02	20:56:04	84.008
07/23/02	20:57:04	86.539
07/23/02	20:58:04	86.141
07/23/02	20:59:04	86.056
07/23/02	21:00:04	84.435

HOPKINS AND BOBCAT - NO. 7158 cont.

Date	Time	Pres (PSI)
07/23/02	21:01:04	86.539
07/23/02	21:02:04	84.833
07/23/02	21:03:04	83.638
07/23/02	21:04:04	85.658
07/23/02	21:05:04	84.236
07/23/02	21:06:04	86.966
07/23/02	21:07:04	84.634
07/23/02	21:08:04	86.141
07/23/02	21:09:04	86.226
07/23/02	21:10:04	85.658
07/23/02	21:11:04	85.288
07/23/02	21:12:04	85.203
07/23/02	21:13:04	85.515
07/23/02	21:14:04	86.312
07/23/02	21:15:04	85.658
07/23/02	21:16:04	84.406
07/23/02	21:17:04	85.913
07/23/02	21:18:04	85.828
07/23/02	21:19:04	85.117
07/23/02	21:20:04	86.169
07/23/02	21:21:04	85.999
07/23/02	21:22:04	85.658
07/23/02	21:23:04	86.482
07/23/02	21:24:04	84.947
07/23/02	21:25:04	86.226
07/23/02	21:26:04	87.165
07/23/02	21:27:04	85.686
07/23/02	21:28:04	85.146
07/23/02	21:29:04	86.169
07/23/02	21:30:04	86.169
07/23/02	21:31:04	84.406
07/23/02	21:32:04	86.141
07/23/02	21:33:04	85.913
07/23/02	21:34:04	84.947
07/23/02	21:35:04	85.430
07/23/02	21:36:04	85.743
07/23/02	21:37:04	85.601
07/23/02	21:38:04	85.999
07/23/02	21:39:04	87.421
07/23/02	21:40:04	86.084
07/23/02	21:41:04	86.681
07/23/02	21:42:04	86.084
07/23/02	21:43:04	86.539
07/23/02	21:44:04	87.335
07/23/02	21:45:04	86.767
07/23/02	21:46:04	86.084
07/23/02	21:47:04	86.568
07/23/02	21:48:04	65.494
07/23/02	21:49:04	65.239
07/23/02	21:50:04	66.120
07/23/02	21:51:04	65.978
07/23/02	21:52:04	65.551
07/23/02	21:53:04	65.239
07/23/02	21:54:04	64.840
07/23/02	21:55:04	64.471
07/23/02	21:56:04	64.556
07/23/02	21:57:04	64.755
07/23/02	21:58:04	72.803
07/23/02	21:59:04	83.098
07/23/02	22:00:04	83.326
07/23/02	22:01:04	83.724
07/23/02	22:02:04	82.899
07/23/02	22:03:04	82.131
07/23/02	22:04:04	81.733
07/23/02	22:05:04	83.240
07/23/02	22:06:04	82.188
07/23/02	22:07:04	82.529
07/23/02	22:08:04	82.757
07/23/02	22:09:04	82.615
07/23/02	22:10:04	83.525
07/23/02	22:11:04	84.349
07/23/02	22:12:04	82.444
07/23/02	22:13:04	82.757
07/23/02	22:14:04	82.529
07/23/02	22:15:04	83.098
07/23/02	22:16:04	83.326
07/23/02	22:17:04	84.577
07/23/02	22:18:04	83.553
07/23/02	22:19:04	83.013
07/23/02	22:20:04	90.009
07/23/02	22:21:04	85.430
07/23/02	22:22:04	86.937
07/23/02	22:23:04	86.539
07/23/02	22:24:04	86.084
07/23/02	22:25:04	88.046
07/23/02	22:26:04	86.795
07/23/02	22:27:04	87.705
07/23/02	22:28:04	86.966
07/23/02	22:29:04	87.250
07/23/02	22:30:04	87.506
07/23/02	22:31:04	86.880
07/23/02	22:32:04	87.079
07/23/02	22:33:04	86.681
07/23/02	22:34:04	87.506
07/23/02	22:35:04	87.648
07/23/02	22:36:04	87.876
07/23/02	22:37:04	87.904
07/23/02	22:38:04	88.359
07/23/02	22:39:04	86.937
07/23/02	22:40:04	88.217
07/23/02	22:41:04	87.335
07/23/02	22:42:04	87.705
07/23/02	22:43:04	87.790
07/23/02	22:44:04	87.648
07/23/02	22:45:04	87.079
07/23/02	22:46:04	89.127
07/23/02	22:47:04	87.790
07/23/02	22:48:04	86.937
07/23/02	22:49:04	88.359
07/23/02	22:50:04	88.189
07/23/02	22:51:04	88.132
07/23/02	22:52:04	88.217
07/23/02	22:53:04	88.814
07/23/02	22:54:04	88.843
07/23/02	22:55:04	88.843
07/23/02	22:56:04	88.445
07/23/02	22:57:04	88.814
07/23/02	22:58:04	87.563
07/23/02	22:59:04	88.302
07/23/02	23:00:04	87.819
07/23/02	23:01:04	87.904
07/23/02	23:02:04	88.132
07/23/02	23:03:04	86.369
07/23/02	23:04:04	87.506
07/23/02	23:05:04	88.359
07/23/02	23:06:04	88.615
07/23/02	23:07:04	87.478
07/23/02	23:08:04	87.705
07/23/02	23:09:04	88.814
07/23/02	23:10:04	89.156
07/23/02	23:11:04	87.904
07/23/02	23:12:04	88.587
07/23/02	23:13:04	88.615
07/23/02	23:14:04	88.359
07/23/02	23:15:04	88.189
07/23/02	23:16:04	89.326
07/23/02	23:17:04	88.274
07/23/02	23:18:04	87.961
07/23/02	23:19:04	87.961
07/23/02	23:20:04	88.416
07/23/02	23:21:04	88.530
07/23/02	23:22:04	88.046
07/23/02	23:23:04	89.212
07/23/02	23:24:04	89.127
07/23/02	23:25:04	89.440
07/23/02	23:26:04	88.672
07/23/02	23:27:04	89.383
07/23/02	23:28:04	90.009
07/23/02	23:29:04	89.724
07/23/02	23:30:04	89.013
07/23/02	23:31:04	87.876
07/23/02	23:32:04	88.701
07/23/02	23:33:04	88.701
07/23/02	23:34:04	87.990
07/23/02	23:35:04	88.900
07/23/02	23:36:04	88.985
07/23/02	23:37:04	89.127
07/23/02	23:38:04	89.156
07/23/02	23:39:04	89.554
07/23/02	23:40:04	89.070
07/23/02	23:41:04	89.383
07/23/02	23:42:04	89.923
07/23/02	23:43:04	90.492
07/23/02	23:44:04	90.265
07/23/02	23:45:04	90.037
07/23/02	23:46:04	90.634
07/23/02	23:47:04	90.322
07/23/02	23:48:04	90.322
07/23/02	23:49:04	88.843
07/23/02	23:50:04	89.554
07/23/02	23:51:04	90.151
07/23/02	23:52:04	89.440
07/23/02	23:53:04	90.151
07/23/02	23:54:04	90.435
07/23/02	23:55:04	90.322
07/23/02	23:56:04	91.203
07/23/02	23:57:04	90.549
07/23/02	23:58:04	90.265
07/23/02	23:59:04	90.976
07/24/02	00:00:04	91.459
07/24/02	00:01:04	90.634
07/24/02	00:02:04	88.587
07/24/02	00:03:04	90.094
07/24/02	00:04:04	90.634
07/24/02	00:05:04	90.407
07/24/02	00:06:04	90.947
07/24/02	00:07:04	90.577
07/24/02	00:08:04	91.288
07/24/02	00:09:04	90.151
07/24/02	00:10:04	90.492
07/24/02	00:11:04	91.061
07/24/02	00:12:04	91.260
07/24/02	00:13:04	90.890
07/24/02	00:14:04	90.577
07/24/02	00:15:04	90.492
07/24/02	00:16:04	91.032
07/24/02	00:17:04	90.805
07/24/02	00:18:04	90.577
07/24/02	00:19:04	91.687
07/24/02	00:20:04	91.288
07/24/02	00:21:04	91.032
07/24/02	00:22:04	91.573
07/24/02	00:23:04	90.350
07/24/02	00:24:04	91.431
07/24/02	00:25:04	91.431
07/24/02	00:26:04	91.516
07/24/02	00:27:04	91.431
07/24/02	00:28:04	91.260
07/24/02	00:29:04	91.431
07/24/02	00:30:04	91.374
07/24/02	00:31:04	91.743
07/24/02	00:32:04	91.743
07/24/02	00:33:04	91.601
07/24/02	00:34:04	92.853
07/24/02	00:35:04	92.284
07/24/02	00:36:04	91.914
07/24/02	00:37:04	91.459
07/24/02	00:38:04	91.459
07/24/02	00:39:04	91.459
07/24/02	00:40:04	91.573
07/24/02	00:41:04	91.658
07/24/02	00:42:04	91.573
07/24/02	00:43:04	91.601
07/24/02	00:44:04	92.056
07/24/02	00:45:04	91.743
07/24/02	00:46:04	92.170
07/24/02	00:47:04	91.743
07/24/02	00:48:04	92.056
07/24/02	00:49:04	92.454
07/24/02	00:50:04	92.625
07/24/02	00:51:04	91.829
07/24/02	00:52:04	92.454
07/24/02	00:53:04	92.142
07/24/02	00:54:04	92.369
07/24/02	00:55:04	91.743
07/24/02	00:56:04	92.312
07/24/02	00:57:04	92.142
07/24/02	00:58:04	91.829
07/24/02	00:59:04	91.772
07/24/02	01:00:04	90.890
07/24/02	01:01:04	91.032
07/24/02	01:02:04	90.663
07/24/02	01:03:04	90.976
07/24/02	01:04:04	91.431
07/24/02	01:05:04	92.284
07/24/02	01:06:04	91.573
07/24/02	01:07:04	91.345
07/24/02	01:08:04	91.288
07/24/02	01:09:04	90.720
07/24/02	01:10:04	92.227
07/24/02	01:11:04	92.284
07/24/02	01:12:04	91.687
07/24/02	01:13:04	91.203
07/24/02	01:14:04	91.175
07/24/02	01:15:04	78.263
07/24/02	01:16:04	79.771
07/24/02	01:17:04	80.453
07/24/02	01:18:04	91.288
07/24/02	01:19:04	92.056
07/24/02	01:20:04	90.634
07/24/02	01:21:04	92.056
07/24/02	01:22:04	90.435
07/24/02	01:23:04	91.516
07/24/02	01:24:04	91.687

HOPKINS AND BOBCAT - NO. 7158 cont.

Date	Time	Pres (PSI)
07/24/02	01:25:04	90.435
07/24/02	01:26:04	90.094
07/24/02	01:27:04	92.085
07/24/02	01:28:04	91.829
07/24/02	01:29:04	91.260
07/24/02	01:30:04	90.720
07/24/02	01:31:04	91.203
07/24/02	01:32:04	90.094
07/24/02	01:33:04	90.151
07/24/02	01:34:04	90.435
07/24/02	01:35:04	90.720
07/24/02	01:36:04	91.687
07/24/02	01:37:04	91.288
07/24/02	01:38:04	90.322
07/24/02	01:39:04	90.805
07/24/02	01:40:04	91.032
07/24/02	01:41:04	91.288
07/24/02	01:42:04	91.345
07/24/02	01:43:04	90.577
07/24/02	01:44:04	91.573
07/24/02	01:45:04	90.435
07/24/02	01:46:04	91.459
07/24/02	01:47:04	91.260
07/24/02	01:48:04	89.781
07/24/02	01:49:04	91.118
07/24/02	01:50:04	90.549
07/24/02	01:51:04	90.549
07/24/02	01:52:04	90.862
07/24/02	01:53:04	90.037
07/24/02	01:54:04	90.805
07/24/02	01:55:04	91.601
07/24/02	01:56:04	91.743
07/24/02	01:57:04	91.374
07/24/02	01:58:04	91.288
07/24/02	01:59:04	91.431
07/24/02	02:00:04	91.061
07/24/02	02:01:04	92.710
07/24/02	02:02:04	90.634
07/24/02	02:03:04	92.796
07/24/02	02:04:04	91.573
07/24/02	02:05:04	92.056
07/24/02	02:06:04	92.597
07/24/02	02:07:04	92.142
07/24/02	02:08:04	91.573
07/24/02	02:09:04	90.890
07/24/02	02:10:04	91.658
07/24/02	02:11:04	90.748
07/24/02	02:12:04	91.516
07/24/02	02:13:04	91.288
07/24/02	02:14:04	91.658
07/24/02	02:15:04	90.890
07/24/02	02:16:04	78.434
07/24/02	02:17:04	78.576
07/24/02	02:18:04	80.482
07/24/02	02:19:04	82.700
07/24/02	02:20:04	82.444
07/24/02	02:21:04	82.302
07/24/02	02:22:04	82.984
07/24/02	02:23:04	82.899
07/24/02	02:24:04	83.155
07/24/02	02:25:04	81.989
07/24/02	02:26:04	82.984
07/24/02	02:27:04	89.952
07/24/02	02:28:04	93.478
07/24/02	02:29:04	90.236
07/24/02	02:30:04	91.516
07/24/02	02:31:04	91.061
07/24/02	02:32:04	90.947
07/24/02	02:33:04	91.573
07/24/02	02:34:04	90.663
07/24/02	02:35:04	90.720
07/24/02	02:36:04	91.288
07/24/02	02:37:04	90.805
07/24/02	02:38:04	91.374
07/24/02	02:39:04	91.743
07/24/02	02:40:04	90.663
07/24/02	02:41:04	90.720
07/24/02	02:42:04	91.061
07/24/02	02:43:04	91.431
07/24/02	02:44:04	91.288
07/24/02	02:45:04	91.288
07/24/02	02:46:04	91.431
07/24/02	02:47:04	91.345
07/24/02	02:48:04	91.459
07/24/02	02:49:04	90.947
07/24/02	02:50:04	91.573
07/24/02	02:51:04	90.634
07/24/02	02:52:04	91.288
07/24/02	02:53:04	90.748
07/24/02	02:54:04	90.663
07/24/02	02:55:04	90.663
07/24/02	02:56:04	91.260
07/24/02	02:57:04	90.748
07/24/02	02:58:04	93.876
07/24/02	02:59:04	91.061
07/24/02	03:00:04	92.170
07/24/02	03:01:04	91.743
07/24/02	03:02:04	91.061
07/24/02	03:03:04	92.085
07/24/02	03:04:04	91.829
07/24/02	03:05:04	91.431
07/24/02	03:06:04	91.772
07/24/02	03:07:04	91.374
07/24/02	03:08:04	91.459
07/24/02	03:09:04	90.976
07/24/02	03:10:04	91.260
07/24/02	03:11:04	91.658
07/24/02	03:12:04	92.142
07/24/02	03:13:04	91.260
07/24/02	03:14:04	91.743
07/24/02	03:15:04	91.601
07/24/02	03:16:04	90.549
07/24/02	03:17:04	91.374
07/24/02	03:18:04	91.260
07/24/02	03:19:04	90.720
07/24/02	03:20:04	90.037
07/24/02	03:21:04	91.601
07/24/02	03:22:04	91.175
07/24/02	03:23:04	91.061
07/24/02	03:24:04	90.976
07/24/02	03:25:04	91.061
07/24/02	03:26:04	90.890
07/24/02	03:27:04	90.947
07/24/02	03:28:04	91.516
07/24/02	03:29:04	90.748
07/24/02	03:30:04	91.772
07/24/02	03:31:04	91.516
07/24/02	03:32:04	91.374
07/24/02	03:33:04	91.687
07/24/02	03:34:04	91.886
07/24/02	03:35:04	91.601
07/24/02	03:36:04	91.516
07/24/02	03:37:04	91.203
07/24/02	03:38:04	91.516
07/24/02	03:39:04	91.687
07/24/02	03:40:04	91.431
07/24/02	03:41:04	92.056
07/24/02	03:42:04	91.687
07/24/02	03:43:04	92.056
07/24/02	03:44:04	91.345
07/24/02	03:45:04	91.431
07/24/02	03:46:04	91.374
07/24/02	03:47:04	90.947
07/24/02	03:48:04	91.999
07/24/02	03:49:04	91.431
07/24/02	03:50:04	91.203
07/24/02	03:51:04	91.431
07/24/02	03:52:04	91.516
07/24/02	03:53:04	92.142
07/24/02	03:54:04	91.431
07/24/02	03:55:04	82.899
07/24/02	03:56:04	79.600
07/24/02	03:57:04	81.961
07/24/02	03:58:04	90.236
07/24/02	03:59:04	91.459
07/24/02	04:00:04	89.440
07/24/02	04:01:04	90.634
07/24/02	04:02:04	90.265
07/24/02	04:03:04	89.013
07/24/02	04:04:04	89.525
07/24/02	04:05:04	89.468
07/24/02	04:06:04	89.241
07/24/02	04:07:04	88.274
07/24/02	04:08:04	89.070
07/24/02	04:09:04	89.440
07/24/02	04:10:04	89.156
07/24/02	04:11:04	89.156
07/24/02	04:12:04	89.070
07/24/02	04:13:04	88.587
07/24/02	04:14:04	89.127
07/24/02	04:15:04	90.350
07/24/02	04:16:04	88.302
07/24/02	04:17:04	89.212
07/24/02	04:18:04	88.814
07/24/02	04:19:04	89.156
07/24/02	04:20:04	89.611
07/24/02	04:21:04	89.554
07/24/02	04:22:04	89.838
07/24/02	04:23:04	89.838
07/24/02	04:24:04	89.127
07/24/02	04:25:04	89.724
07/24/02	04:26:04	89.923
07/24/02	04:27:04	89.070
07/24/02	04:28:04	89.212
07/24/02	04:29:04	89.013
07/24/02	04:30:04	88.985
07/24/02	04:31:04	89.383
07/24/02	04:32:04	87.819
07/24/02	04:33:04	88.757
07/24/02	04:34:04	88.814
07/24/02	04:35:04	90.492
07/24/02	04:36:04	89.326
07/24/02	04:37:04	89.326
07/24/02	04:38:04	90.577
07/24/02	04:39:04	90.805
07/24/02	04:40:04	90.890
07/24/02	04:41:04	90.236
07/24/02	04:42:04	90.094
07/24/02	04:43:04	90.094
07/24/02	04:44:04	89.554
07/24/02	04:45:04	91.288
07/24/02	04:46:04	90.350
07/24/02	04:47:04	90.009
07/24/02	04:48:04	89.838
07/24/02	04:49:04	89.696
07/24/02	04:50:04	89.611
07/24/02	04:51:04	89.298
07/24/02	04:52:04	89.383
07/24/02	04:53:04	90.037
07/24/02	04:54:04	89.866
07/24/02	04:55:04	89.639
07/24/02	04:56:04	89.923
07/24/02	04:57:04	90.322
07/24/02	04:58:04	89.241
07/24/02	04:59:04	88.928
07/24/02	05:00:04	89.383
07/24/02	05:01:04	87.506
07/24/02	05:02:04	87.990
07/24/02	05:03:04	87.790
07/24/02	05:04:04	86.767
07/24/02	05:05:04	87.165
07/24/02	05:06:04	87.506
07/24/02	05:07:04	87.876
07/24/02	05:08:04	87.591
07/24/02	05:09:04	87.734
07/24/02	05:10:04	88.302
07/24/02	05:11:04	88.359
07/24/02	05:12:04	88.132
07/24/02	05:13:04	88.843
07/24/02	05:14:04	88.701
07/24/02	05:15:04	88.445
07/24/02	05:16:04	88.132
07/24/02	05:17:04	88.274
07/24/02	05:18:04	89.866
07/24/02	05:19:04	92.369
07/24/02	05:20:04	89.781
07/24/02	05:21:04	91.118
07/24/02	05:22:04	91.431
07/24/02	05:23:04	90.236
07/24/02	05:24:04	91.175
07/24/02	05:25:04	90.976
07/24/02	05:26:04	91.431
07/24/02	05:27:04	91.061
07/24/02	05:28:04	90.862
07/24/02	05:29:04	91.203
07/24/02	05:30:04	92.227
07/24/02	05:31:04	90.577
07/24/02	05:32:04	91.829
07/24/02	05:33:04	91.459
07/24/02	05:34:04	90.037
07/24/02	05:35:04	90.322
07/24/02	05:36:04	91.118
07/24/02	05:37:04	91.260
07/24/02	05:38:04	90.179
07/24/02	05:39:04	90.265
07/24/02	05:40:04	90.748
07/24/02	05:41:04	90.890
07/24/02	05:42:04	90.435
07/24/02	05:43:04	90.577
07/24/02	05:44:04	91.601
07/24/02	05:45:04	90.151
07/24/02	05:46:04	90.890
07/24/02	05:47:04	91.118
07/24/02	05:48:04	90.265

HOPKINS AND BOBCAT - NO. 7158 cont.

Date	Time	Pres (PSI)
07/24/02	05:49:04	90.350
07/24/02	05:50:04	91.516
07/24/02	05:51:04	90.549
07/24/02	05:52:04	91.999
07/24/02	05:53:04	90.549
07/24/02	05:54:04	91.061
07/24/02	05:55:04	91.032
07/24/02	05:56:04	90.634
07/24/02	05:57:04	89.468
07/24/02	05:58:04	90.236
07/24/02	05:59:04	89.212
07/24/02	06:00:04	90.890
07/24/02	06:01:04	89.440
07/24/02	06:02:04	89.952
07/24/02	06:03:04	88.928
07/24/02	06:04:04	90.037
07/24/02	06:05:04	89.554
07/24/02	06:06:04	89.724
07/24/02	06:07:04	89.724
07/24/02	06:08:04	88.900
07/24/02	06:09:04	89.781
07/24/02	06:10:04	89.781
07/24/02	06:11:04	89.383
07/24/02	06:12:04	89.070
07/24/02	06:13:04	90.009
07/24/02	06:14:04	90.634
07/24/02	06:15:04	88.587
07/24/02	06:16:04	89.440
07/24/02	06:17:04	90.037
07/24/02	06:18:04	88.672
07/24/02	06:19:04	90.435
07/24/02	06:20:04	89.468
07/24/02	06:21:04	89.866
07/24/02	06:22:04	89.326
07/24/02	06:23:04	89.724
07/24/02	06:24:04	89.923
07/24/02	06:25:04	90.009
07/24/02	06:26:04	90.009
07/24/02	06:27:04	89.298
07/24/02	06:28:04	88.302
07/24/02	06:29:04	88.359
07/24/02	06:30:04	89.866
07/24/02	06:31:04	87.904
07/24/02	06:32:04	89.298
07/24/02	06:33:04	89.127
07/24/02	06:34:04	88.985
07/24/02	06:35:04	89.838
07/24/02	06:36:04	89.611
07/24/02	06:37:04	88.985
07/24/02	06:38:04	89.070
07/24/02	06:39:04	88.701
07/24/02	06:40:04	88.416
07/24/02	06:41:04	89.013
07/24/02	06:42:04	89.611
07/24/02	06:43:04	88.814
07/24/02	06:44:04	90.549
07/24/02	06:45:04	90.236
07/24/02	06:46:04	90.322
07/24/02	06:47:04	89.866
07/24/02	06:48:04	90.094
07/24/02	06:49:04	90.179
07/24/02	06:50:04	89.013
07/24/02	06:51:04	88.445
07/24/02	06:52:04	88.615
07/24/02	06:53:04	88.587
07/24/02	06:54:04	87.990
07/24/02	06:55:04	89.383
07/24/02	06:56:04	90.322
07/24/02	06:57:04	88.189
07/24/02	06:58:04	89.639
07/24/02	06:59:04	89.554
07/24/02	07:00:04	89.127
07/24/02	07:01:04	88.843
07/24/02	07:02:04	89.383
07/24/02	07:03:04	88.587
07/24/02	07:04:04	88.046
07/24/02	07:05:04	89.326
07/24/02	07:06:04	86.767
07/24/02	07:07:04	87.734
07/24/02	07:08:04	88.615
07/24/02	07:09:04	87.961
07/24/02	07:10:04	87.705
07/24/02	07:11:04	86.880
07/24/02	07:12:04	86.880
07/24/02	07:13:04	87.392
07/24/02	07:14:04	86.795
07/24/02	07:15:04	86.568
07/24/02	07:16:04	86.482
07/24/02	07:17:04	85.970
07/24/02	07:18:04	86.852
07/24/02	07:19:04	86.880
07/24/02	07:20:04	86.312
07/24/02	07:21:04	86.681
07/24/02	07:22:04	83.610
07/24/02	07:23:04	86.966
07/24/02	07:24:04	87.165
07/24/02	07:25:04	86.226
07/24/02	07:26:04	87.990
07/24/02	07:27:04	87.421
07/24/02	07:28:04	87.904
07/24/02	07:29:04	86.681
07/24/02	07:30:04	86.226
07/24/02	07:31:04	87.335
07/24/02	07:32:04	86.681
07/24/02	07:33:04	86.710
07/24/02	07:34:04	85.828
07/24/02	07:35:04	88.217
07/24/02	07:36:04	87.193
07/24/02	07:37:04	87.108
07/24/02	07:38:04	87.392
07/24/02	07:39:04	86.937
07/24/02	07:40:04	88.701
07/24/02	07:41:04	89.298
07/24/02	07:42:04	88.701
07/24/02	07:43:04	87.478
07/24/02	07:44:04	87.023
07/24/02	07:45:04	87.904
07/24/02	07:46:04	88.814
07/24/02	07:47:04	89.383
07/24/02	07:48:04	88.189
07/24/02	07:49:04	87.734
07/24/02	07:50:04	88.814
07/24/02	07:51:04	88.985
07/24/02	07:52:04	89.298
07/24/02	07:53:04	88.359
07/24/02	07:54:04	90.663
07/24/02	07:55:04	88.701
07/24/02	07:56:04	88.985
07/24/02	07:57:04	89.070
07/24/02	07:58:04	88.302
07/24/02	07:59:04	88.359
07/24/02	08:00:04	89.156
07/24/02	08:01:04	89.440
07/24/02	08:02:04	87.478
07/24/02	08:03:04	86.169
07/24/02	08:04:04	86.482
07/24/02	08:05:04	86.369
07/24/02	08:06:04	86.710
07/24/02	08:07:04	87.506
07/24/02	08:08:04	87.250
07/24/02	08:09:04	87.250
07/24/02	08:10:04	87.279
07/24/02	08:11:04	87.108
07/24/02	08:12:04	85.970
07/24/02	08:13:04	85.117
07/24/02	08:14:04	89.696
07/24/02	08:15:04	86.795
07/24/02	08:16:04	87.079
07/24/02	08:17:04	85.857
07/24/02	08:18:04	87.108
07/24/02	08:19:04	87.335
07/24/02	08:20:04	86.852
07/24/02	08:21:04	87.478
07/24/02	08:22:04	87.023
07/24/02	08:23:04	68.082
07/24/02	08:24:04	70.528
07/24/02	08:25:04	72.661
07/24/02	08:26:04	71.068
07/24/02	08:27:04	70.301
07/24/02	08:28:04	70.869
07/24/02	08:29:04	82.615
07/24/02	08:30:04	88.985
07/24/02	08:31:04	85.259
07/24/02	08:32:04	84.577
07/24/02	08:33:04	86.624
07/24/02	08:34:04	86.056
07/24/02	08:35:04	85.373
07/24/02	08:36:04	85.288
07/24/02	08:37:04	85.117
07/24/02	08:38:04	83.638
07/24/02	08:39:04	83.781
07/24/02	08:40:04	84.492
07/24/02	08:41:04	84.634
07/24/02	08:42:04	85.515
07/24/02	08:43:04	85.913
07/24/02	08:44:04	84.492
07/24/02	08:45:04	85.544
07/24/02	08:46:04	81.961
07/24/02	08:47:04	81.193
07/24/02	08:48:04	81.790
07/24/02	08:49:04	81.961
07/24/02	08:50:04	81.989
07/24/02	08:51:04	81.420
07/24/02	08:52:04	82.273
07/24/02	08:53:04	81.022
07/24/02	08:54:04	82.302
07/24/02	08:55:04	80.453
07/24/02	08:56:04	80.795
07/24/02	08:57:04	82.927
07/24/02	08:58:04	83.382
07/24/02	08:59:04	85.060
07/24/02	09:00:04	84.008
07/24/02	09:01:04	83.951
07/24/02	09:02:04	95.696
07/24/02	09:03:04	89.212
07/24/02	09:04:04	84.093
07/24/02	09:05:04	85.743
07/24/02	09:06:04	87.250
07/24/02	09:07:04	86.397
07/24/02	09:08:04	87.335
07/24/02	09:09:04	86.454
07/24/02	09:10:04	87.790
07/24/02	09:11:04	87.563
07/24/02	09:12:04	86.937
07/24/02	09:13:04	85.146
07/24/02	09:14:04	83.098
07/24/02	09:15:04	87.705
07/24/02	09:16:04	85.970
07/24/02	09:17:04	85.060
07/24/02	09:18:04	85.117
07/24/02	09:19:04	83.297
07/24/02	09:20:04	84.093
07/24/02	09:21:04	80.453
07/24/02	09:22:04	81.961
07/24/02	09:23:04	81.505
07/24/02	09:24:04	81.648
07/24/02	09:25:04	81.420
07/24/02	09:26:04	80.340
07/24/02	09:27:04	80.766
07/24/02	09:28:04	77.410
07/24/02	09:29:04	77.325
07/24/02	09:30:04	78.406
07/24/02	09:31:04	77.382
07/24/02	09:32:04	77.553
07/24/02	09:33:04	77.012
07/24/02	09:34:04	81.562
07/24/02	09:35:04	81.562
07/24/02	09:36:04	80.226
07/24/02	09:37:04	81.818
07/24/02	09:38:04	80.965
07/24/02	09:39:04	82.899
07/24/02	09:40:04	82.188
07/24/02	09:41:04	81.591
07/24/02	09:42:04	80.396
07/24/02	09:43:04	85.828
07/24/02	09:44:04	87.335
07/24/02	09:45:04	86.226
07/24/02	09:46:04	86.084
07/24/02	09:47:04	86.169
07/24/02	09:48:04	84.520
07/24/02	09:49:04	87.734
07/24/02	09:50:04	87.421
07/24/02	09:51:04	87.250
07/24/02	09:52:04	85.913
07/24/02	09:53:04	86.454
07/24/02	09:54:04	87.250
07/24/02	09:55:04	85.544
07/24/02	09:56:04	87.023
07/24/02	09:57:04	86.255
07/24/02	09:58:04	86.084
07/24/02	09:59:04	86.369
07/24/02	10:00:04	86.141
07/24/02	10:01:04	87.734
07/24/02	10:02:04	86.937
07/24/02	10:03:04	85.970
07/24/02	10:04:04	85.913
07/24/02	10:05:04	86.624
07/24/02	10:06:04	75.988
07/24/02	10:07:04	77.012
07/24/02	10:08:04	76.756
07/24/02	10:09:04	76.927
07/24/02	10:10:04	79.429
07/24/02	10:11:04	77.638
07/24/02	10:12:04	78.918

HOPKINS AND BOBCAT - NO. 7158 cont.

Date	Time	Pres (PSI)	Date	Time	Pres (PSI)	Date	Time	Pres (PSI)	Date	Time	Pres (PSI)
07/24/02	10:13:04	78.320	07/24/02	11:19:04	42.601	07/24/02	12:25:04	85.458	07/24/02	13:31:04	83.411
07/24/02	10:14:04	77.695	07/24/02	11:20:04	43.710	07/24/02	12:26:04	83.951	07/24/02	13:32:04	83.411
07/24/02	10:15:04	78.434	07/24/02	11:21:04	43.398	07/24/02	12:27:04	84.719	07/24/02	13:33:04	84.634
07/24/02	10:16:04	73.600	07/24/02	11:22:04	55.171	07/24/02	12:28:04	83.610	07/24/02	13:34:04	85.060
07/24/02	10:17:04	74.254	07/24/02	11:23:04	55.712	07/24/02	12:29:04	83.923	07/24/02	13:35:04	82.131
07/24/02	10:18:04	74.396	07/24/02	11:24:04	59.750	07/24/02	12:30:04	82.984	07/24/02	13:36:04	85.259
07/24/02	10:19:04	73.912	07/24/02	11:25:04	61.940	07/24/02	12:31:04	84.122	07/24/02	13:37:04	84.520
07/24/02	10:20:04	74.026	07/24/02	11:26:04	64.755	07/24/02	12:32:04	84.577	07/24/02	13:38:04	81.477
07/24/02	10:21:04	73.429	07/24/02	11:27:04	69.220	07/24/02	12:33:04	84.719	07/24/02	13:39:04	85.458
07/24/02	10:22:04	75.647	07/24/02	11:28:04	76.472	07/24/02	12:34:04	85.373	07/24/02	13:40:04	84.492
07/24/02	10:23:04	79.145	07/24/02	11:29:04	84.435	07/24/02	12:35:04	84.748	07/24/02	13:41:04	84.093
07/24/02	10:24:04	85.117	07/24/02	11:30:04	83.923	07/24/02	12:36:04	83.098	07/24/02	13:42:04	80.851
07/24/02	10:25:04	88.843	07/24/02	11:31:04	83.695	07/24/02	12:37:04	85.203	07/24/02	13:43:04	80.965
07/24/02	10:26:04	85.999	07/24/02	11:32:04	81.875	07/24/02	12:38:04	83.781	07/24/02	13:44:04	80.880
07/24/02	10:27:04	85.658	07/24/02	11:33:04	83.781	07/24/02	12:39:04	84.520	07/24/02	13:45:04	80.880
07/24/02	10:28:04	85.060	07/24/02	11:34:04	85.117	07/24/02	12:40:04	84.577	07/24/02	13:46:04	82.671
07/24/02	10:29:04	86.397	07/24/02	11:35:04	82.501	07/24/02	12:41:04	84.833	07/24/02	13:47:04	81.648
07/24/02	10:30:04	86.226	07/24/02	11:36:04	84.833	07/24/02	12:42:04	83.525	07/24/02	13:48:04	84.947
07/24/02	10:31:04	85.146	07/24/02	11:37:04	84.236	07/24/02	12:43:04	83.638	07/24/02	13:49:04	85.857
07/24/02	10:32:04	86.767	07/24/02	11:38:04	84.833	07/24/02	12:44:04	84.975	07/24/02	13:50:04	84.577
07/24/02	10:33:04	85.913	07/24/02	11:39:04	83.951	07/24/02	12:45:04	85.686	07/24/02	13:51:04	84.719
07/24/02	10:34:04	86.056	07/24/02	11:40:04	84.406	07/24/02	12:46:04	83.809	07/24/02	13:52:04	84.833
07/24/02	10:35:04	86.482	07/24/02	11:41:04	85.060	07/24/02	12:47:04	84.833	07/24/02	13:53:04	82.131
07/24/02	10:36:04	84.492	07/24/02	11:42:04	86.369	07/24/02	12:48:04	85.146	07/24/02	13:54:04	84.037
07/24/02	10:37:04	84.975	07/24/02	11:43:04	85.032	07/24/02	12:49:04	84.748	07/24/02	13:55:04	82.984
07/24/02	10:38:04	85.601	07/24/02	11:44:04	86.454	07/24/02	12:50:04	83.809	07/24/02	13:56:04	84.435
07/24/02	10:39:04	85.430	07/24/02	11:45:04	84.947	07/24/02	12:51:04	84.492	07/24/02	13:57:04	85.117
07/24/02	10:40:04	87.165	07/24/02	11:46:04	86.169	07/24/02	12:52:04	84.321	07/24/02	13:58:04	85.373
07/24/02	10:41:04	84.349	07/24/02	11:47:04	85.117	07/24/02	12:53:04	83.781	07/24/02	13:59:04	85.345
07/24/02	10:42:04	83.951	07/24/02	11:48:04	85.373	07/24/02	12:54:04	82.700	07/24/02	14:00:04	84.662
07/24/02	10:43:04	85.828	07/24/02	11:49:04	85.999	07/24/02	12:55:04	83.638	07/24/02	14:01:04	84.093
07/24/02	10:44:04	85.544	07/24/02	11:50:04	85.288	07/24/02	12:56:04	83.326	07/24/02	14:02:04	84.179
07/24/02	10:45:04	85.771	07/24/02	11:51:04	85.345	07/24/02	12:57:04	83.923	07/24/02	14:03:04	82.927
07/24/02	10:46:04	85.345	07/24/02	11:52:04	85.259	07/24/02	12:58:04	84.236	07/24/02	14:04:04	83.013
07/24/02	10:47:04	85.146	07/24/02	11:53:04	85.146	07/24/02	12:59:04	84.122	07/24/02	14:05:04	83.866
07/24/02	10:48:04	83.923	07/24/02	11:54:04	85.658	07/24/02	13:00:04	81.591	07/24/02	14:06:04	84.122
07/24/02	10:49:04	86.624	07/24/02	11:55:04	86.312	07/24/02	13:01:04	82.273	07/24/02	14:07:04	82.899
07/24/02	10:50:04	84.975	07/24/02	11:56:04	86.169	07/24/02	13:02:04	79.230	07/24/02	14:08:04	83.326
07/24/02	10:51:04	85.601	07/24/02	11:57:04	85.288	07/24/02	13:03:04	80.396	07/24/02	14:09:04	83.013
07/24/02	10:52:04	84.975	07/24/02	11:58:04	85.117	07/24/02	13:04:04	81.989	07/24/02	14:10:04	83.923
07/24/02	10:53:04	84.975	07/24/02	11:59:04	86.056	07/24/02	13:05:04	81.505	07/24/02	14:11:04	83.610
07/24/02	10:54:04	83.326	07/24/02	12:00:04	83.382	07/24/02	13:06:04	80.652	07/24/02	14:12:04	83.240
07/24/02	10:55:04	83.553	07/24/02	12:01:04	84.577	07/24/02	13:07:04	80.140	07/24/02	14:13:04	84.236
07/24/02	10:56:04	83.638	07/24/02	12:02:04	85.032	07/24/02	13:08:04	80.937	07/24/02	14:14:04	83.638
07/24/02	10:57:04	82.842	07/24/02	12:03:04	86.312	07/24/02	13:09:04	80.482	07/24/02	14:15:04	83.781
07/24/02	10:58:04	86.255	07/24/02	12:04:04	85.259	07/24/02	13:10:04	80.795	07/24/02	14:16:04	83.724
07/24/02	10:59:04	87.165	07/24/02	12:05:04	86.084	07/24/02	13:11:04	80.766	07/24/02	14:17:04	81.818
07/24/02	11:00:04	85.032	07/24/02	12:06:04	84.748	07/24/02	13:12:04	81.107	07/24/02	14:18:04	83.724
07/24/02	11:01:04	44.990	07/24/02	12:07:04	82.899	07/24/02	13:13:04	80.084	07/24/02	14:19:04	83.638
07/24/02	11:02:04	35.264	07/24/02	12:08:04	85.658	07/24/02	13:14:04	82.444	07/24/02	14:20:04	83.240
07/24/02	11:03:04	36.544	07/24/02	12:09:04	83.411	07/24/02	13:15:04	81.022	07/24/02	14:21:04	83.411
07/24/02	11:04:04	42.544	07/24/02	12:10:04	86.056	07/24/02	13:16:04	80.937	07/24/02	14:22:04	83.724
07/24/02	11:05:04	42.402	07/24/02	12:11:04	81.790	07/24/02	13:17:04	83.951	07/24/02	14:23:04	82.899
07/24/02	11:06:04	44.336	07/24/02	12:12:04	83.411	07/24/02	13:18:04	85.060	07/24/02	14:24:04	83.525
07/24/02	11:07:04	44.564	07/24/02	12:13:04	82.785	07/24/02	13:19:04	83.098	07/24/02	14:25:04	82.899
07/24/02	11:08:04	44.421	07/24/02	12:14:04	83.695	07/24/02	13:20:04	81.193	07/24/02	14:26:04	83.411
07/24/02	11:09:04	45.218	07/24/02	12:15:04	82.444	07/24/02	13:21:04	82.501	07/24/02	14:27:04	82.757
07/24/02	11:10:04	44.194	07/24/02	12:16:04	57.532	07/24/02	13:22:04	82.302	07/24/02	14:28:04	82.131
07/24/02	11:11:04	44.677	07/24/02	12:17:04	48.033	07/24/02	13:23:04	86.141	07/24/02	14:29:04	84.264
07/24/02	11:12:04	42.772	07/24/02	12:18:04	68.736	07/24/02	13:24:04	84.947	07/24/02	14:30:04	83.212
07/24/02	11:13:04	43.255	07/24/02	12:19:04	71.893	07/24/02	13:25:04	84.008	07/24/02	14:31:04	84.520
07/24/02	11:14:04	42.687	07/24/02	12:20:04	80.311	07/24/02	13:26:04	84.890	07/24/02	14:32:04	82.785
07/24/02	11:15:04	42.772	07/24/02	12:21:04	90.037	07/24/02	13:27:04	84.037	07/24/02	14:33:04	82.785
07/24/02	11:16:04	41.122	07/24/02	12:22:04	87.990	07/24/02	13:28:04	83.013	07/24/02	14:34:04	84.008
07/24/02	11:17:04	41.663	07/24/02	12:23:04	84.321	07/24/02	13:29:04	84.634	07/24/02	14:35:04	82.757
07/24/02	11:18:04	41.378	07/24/02	12:24:04	83.297	07/24/02	13:30:04	84.264	07/24/02	14:36:04	82.586

HOPKINS AND BOBCAT - NO. 7158 cont.

Date	Time	Pres (PSI)	Date	Time	Pres (PSI)	Date	Time	Pres (PSI)	Date	Time	Pres (PSI)
07/24/02	14:37:04	82.757									
07/24/02	14:38:04	83.724									
07/24/02	14:39:04	84.520									
07/24/02	14:40:04	85.032									
07/24/02	14:41:04	83.695									
07/24/02	14:42:04	82.586									
07/24/02	14:43:04	83.553									
07/24/02	14:44:04	82.984									
07/24/02	14:45:04	82.671									
07/24/02	14:46:04	83.923									
07/24/02	14:47:04	83.724									
07/24/02	14:48:04	86.767									
07/24/02	14:49:04	83.468									
07/24/02	14:50:04	82.302									
07/24/02	14:51:04	81.818									
07/24/02	14:52:04	81.648									
07/24/02	14:53:04	80.482									
07/24/02	14:54:04	79.685									
07/24/02	14:55:04	82.842									
07/24/02	14:56:04	82.444									
07/24/02	14:57:04	84.264									
07/24/02	14:58:04	84.975									
07/24/02	14:59:04	85.373									
07/24/02	15:00:04	85.060									
07/24/02	15:01:04	84.122									
07/24/02	15:02:04	85.601									
07/24/02	15:03:04	84.008									
07/24/02	15:04:04	83.951									
07/24/02	15:05:04	83.638									
07/24/02	15:06:04	83.098									
07/24/02	15:07:04	83.525									
07/24/02	15:08:04	85.203									
07/24/02	15:09:04	83.212									
07/24/02	15:10:04	81.818									
07/24/02	15:11:04	-0.796									
07/24/02	15:12:04	-0.825									
07/24/02	15:13:04	-0.796									
07/24/02	15:14:04	-0.825									
07/24/02	15:15:04	-0.796									
07/24/02	15:16:04	-0.825									
07/24/02	15:17:04	-0.796									
07/24/02	15:18:04	-0.796									
07/24/02	15:19:04	-0.796									
07/24/02	15:20:04	-0.796									
07/24/02	15:21:04	-0.796									
07/24/02	15:22:04	-0.796									
07/24/02	15:23:04	-0.739									
07/24/02	15:24:04	-0.796									
07/24/02	15:25:04	-0.796									

LAGO VISTA AND CRYSTAL RIVER PKWY. - NO. 7553

Date	Time	Pres (PSI)
07/22/02	12:38:18	0.341
07/22/02	12:39:18	0.341
07/22/02	12:40:18	0.341
07/22/02	12:41:18	0.398
07/22/02	12:42:18	0.341
07/22/02	12:43:18	0.284
07/22/02	12:44:18	0.284
07/22/02	12:45:18	0.341
07/22/02	12:46:18	0.341
07/22/02	12:47:18	0.284
07/22/02	12:48:18	0.284
07/22/02	12:49:18	0.284
07/22/02	12:50:18	0.341
07/22/02	12:51:18	0.284
07/22/02	12:52:18	0.341
07/22/02	12:53:18	0.284
07/22/02	12:54:18	0.284
07/22/02	12:55:18	0.284
07/22/02	12:56:18	0.284
07/22/02	12:57:18	0.341
07/22/02	12:58:18	0.284
07/22/02	12:59:18	0.341
07/22/02	13:00:18	20.447
07/22/02	13:01:18	45.843
07/22/02	13:02:18	46.497
07/22/02	13:03:18	48.829
07/22/02	13:04:18	50.991
07/22/02	13:05:18	50.422
07/22/02	13:06:18	50.081
07/22/02	13:07:18	50.991
07/22/02	13:08:18	49.512
07/22/02	13:09:18	50.393
07/22/02	13:10:18	50.280
07/22/02	13:11:18	47.066
07/22/02	13:12:18	48.829
07/22/02	13:13:18	48.118
07/22/02	13:14:18	47.493
07/22/02	13:15:18	44.905
07/22/02	13:16:18	47.379
07/22/02	13:17:18	48.460
07/22/02	13:18:18	46.440
07/22/02	13:19:18	50.536
07/22/02	13:20:18	49.398
07/22/02	13:21:18	48.204
07/22/02	13:22:18	49.341
07/22/02	13:23:18	48.431
07/22/02	13:24:18	49.512
07/22/02	13:25:18	49.199
07/22/02	13:26:18	50.479
07/22/02	13:27:18	49.512
07/22/02	13:28:18	49.142
07/22/02	13:29:18	47.692
07/22/02	13:30:18	49.398
07/22/02	13:31:18	46.099
07/22/02	13:32:18	47.123
07/22/02	13:33:18	50.849
07/22/02	13:34:18	49.199
07/22/02	13:35:18	47.635
07/22/02	13:36:18	49.967
07/22/02	13:37:18	48.886
07/22/02	13:38:18	49.085
07/22/02	13:39:18	48.374
07/22/02	13:40:18	48.147
07/22/02	13:41:18	50.479
07/22/02	13:42:18	48.772
07/22/02	13:43:18	48.204
07/22/02	13:44:18	49.199
07/22/02	13:45:18	48.431
07/22/02	13:46:18	50.280
07/22/02	13:47:18	48.886
07/22/02	13:48:18	46.185
07/22/02	13:49:18	48.829
07/22/02	13:50:18	50.109
07/22/02	13:51:18	49.341
07/22/02	13:52:18	49.455
07/22/02	13:53:18	45.161
07/22/02	13:54:18	45.843
07/22/02	13:55:18	46.412
07/22/02	13:56:18	47.009
07/22/02	13:57:18	46.440
07/22/02	13:58:18	48.687
07/22/02	13:59:18	50.081
07/22/02	14:00:18	50.223
07/22/02	14:01:18	50.081
07/22/02	14:02:18	48.261
07/22/02	14:03:18	49.654
07/22/02	14:04:18	43.710
07/22/02	14:05:18	44.535
07/22/02	14:06:18	41.492
07/22/02	14:07:18	39.473
07/22/02	14:08:18	39.331
07/22/02	14:09:18	38.506
07/22/02	14:10:18	47.948
07/22/02	14:11:18	48.062
07/22/02	14:12:18	48.261
07/22/02	14:13:18	48.943
07/22/02	14:14:18	48.829
07/22/02	14:15:18	48.829
07/22/02	14:16:18	48.431
07/22/02	14:17:18	49.398
07/22/02	14:18:18	49.597
07/22/02	14:19:18	48.261
07/22/02	14:20:18	47.749
07/22/02	14:21:18	48.886
07/22/02	14:22:18	48.317
07/22/02	14:23:18	47.948
07/22/02	14:24:18	49.142
07/22/02	14:25:18	47.692
07/22/02	14:26:18	47.749
07/22/02	14:27:18	47.948
07/22/02	14:28:18	49.142
07/22/02	14:29:18	46.554
07/22/02	14:30:18	47.578
07/22/02	14:31:18	49.142
07/22/02	14:32:18	44.592
07/22/02	14:33:18	46.156
07/22/02	14:34:18	45.843
07/22/02	14:35:18	45.360
07/22/02	14:36:18	47.009
07/22/02	14:37:18	44.478
07/22/02	14:38:18	45.985
07/22/02	14:39:18	47.379
07/22/02	14:40:18	45.872
07/22/02	14:41:18	46.554
07/22/02	14:42:18	44.706
07/22/02	14:43:18	44.791
07/22/02	14:44:18	44.080
07/22/02	14:45:18	45.104
07/22/02	14:46:18	44.791
07/22/02	14:47:18	46.099
07/22/02	14:48:18	46.185
07/22/02	14:49:18	45.872
07/22/02	14:50:18	46.355
07/22/02	14:51:18	45.218
07/22/02	14:52:18	45.417
07/22/02	14:53:18	46.099
07/22/02	14:54:18	44.393
07/22/02	14:55:18	46.412
07/22/02	14:56:18	44.905
07/22/02	14:57:18	46.924
07/22/02	14:58:18	46.412
07/22/02	14:59:18	43.198
07/22/02	15:00:18	45.843
07/22/02	15:01:18	45.417
07/22/02	15:02:18	40.554
07/22/02	15:03:18	45.786
07/22/02	15:04:18	49.284
07/22/02	15:05:18	45.161
07/22/02	15:06:18	46.554
07/22/02	15:07:18	46.753
07/22/02	15:08:18	45.360
07/22/02	15:09:18	46.440
07/22/02	15:10:18	47.493
07/22/02	15:11:18	47.578
07/22/02	15:12:18	48.118
07/22/02	15:13:18	46.554
07/22/02	15:14:18	46.725
07/22/02	15:15:18	48.460
07/22/02	15:16:18	46.099
07/22/02	15:17:18	44.905
07/22/02	15:18:18	49.654
07/22/02	15:19:18	46.497
07/22/02	15:20:18	46.981
07/22/02	15:21:18	45.673
07/22/02	15:22:18	47.066
07/22/02	15:23:18	47.009
07/22/02	15:24:18	45.673
07/22/02	15:25:18	48.630
07/22/02	15:26:18	47.237
07/22/02	15:27:18	48.204
07/22/02	15:28:18	45.161
07/22/02	15:29:18	47.692
07/22/02	15:30:18	44.905
07/22/02	15:31:18	47.578
07/22/02	15:32:18	47.009
07/22/02	15:33:18	48.317
07/22/02	15:34:18	45.303
07/22/02	15:35:18	49.341
07/22/02	15:36:18	47.294
07/22/02	15:37:18	47.948
07/22/02	15:38:18	49.199
07/22/02	15:39:18	47.891
07/22/02	15:40:18	49.142
07/22/02	15:41:18	49.256
07/22/02	15:42:18	47.493
07/22/02	15:43:18	49.256
07/22/02	15:44:18	47.749
07/22/02	15:45:18	52.612
07/22/02	15:46:18	50.905
07/22/02	15:47:18	51.048
07/22/02	15:48:18	50.991
07/22/02	15:49:18	50.962
07/22/02	15:50:18	52.754
07/22/02	15:51:18	52.384
07/22/02	15:52:18	50.393
07/22/02	15:53:18	49.967
07/22/02	15:54:18	50.678
07/22/02	15:55:18	50.337
07/22/02	15:56:18	49.654
07/22/02	15:57:18	49.768
07/22/02	15:58:18	50.962
07/22/02	15:59:18	50.991
07/22/02	16:00:18	49.910
07/22/02	16:01:18	48.886
07/22/02	16:02:18	48.573
07/22/02	16:03:18	49.967
07/22/02	16:04:18	48.517
07/22/02	16:05:18	50.962
07/22/02	16:06:18	48.147
07/22/02	16:07:18	49.512
07/22/02	16:08:18	49.341
07/22/02	16:09:18	49.284
07/22/02	16:10:18	49.142
07/22/02	16:11:18	49.711
07/22/02	16:12:18	50.849
07/22/02	16:13:18	48.943
07/22/02	16:14:18	48.317
07/22/02	16:15:18	48.517
07/22/02	16:16:18	47.123
07/22/02	16:17:18	46.668
07/22/02	16:18:18	48.829
07/22/02	16:19:18	49.768
07/22/02	16:20:18	48.573
07/22/02	16:21:18	50.792
07/22/02	16:22:18	48.630
07/22/02	16:23:18	46.810
07/22/02	16:24:18	48.886
07/22/02	16:25:18	49.512
07/22/02	16:26:18	48.261
07/22/02	16:27:18	47.862
07/22/02	16:28:18	49.825
07/22/02	16:29:18	48.062
07/22/02	16:30:18	50.649
07/22/02	16:31:18	50.678
07/22/02	16:32:18	47.635
07/22/02	16:33:18	50.109
07/22/02	16:34:18	48.716
07/22/02	16:35:18	50.849
07/22/02	16:36:18	49.853
07/22/02	16:37:18	46.156
07/22/02	16:38:18	48.687
07/22/02	16:39:18	49.910
07/22/02	16:40:18	49.256
07/22/02	16:41:18	49.256
07/22/02	16:42:18	50.109
07/22/02	16:43:18	50.280
07/22/02	16:44:18	50.280
07/22/02	16:45:18	50.393
07/22/02	16:46:18	49.711
07/22/02	16:47:18	49.199
07/22/02	16:48:18	49.398
07/22/02	16:49:18	49.341
07/22/02	16:50:18	48.716
07/22/02	16:51:18	49.199
07/22/02	16:52:18	49.825
07/22/02	16:53:18	49.256
07/22/02	16:54:18	50.536
07/22/02	16:55:18	50.024
07/22/02	16:56:18	48.886
07/22/02	16:57:18	48.431
07/22/02	16:58:18	48.716
07/22/02	16:59:18	47.948
07/22/02	17:00:18	48.204
07/22/02	17:01:18	47.948

LAGO VISTA AND CRYSTAL RIVER PKWY. - NO. 7553 cont.

Date	Time	Pres (PSI)
07/22/02	17:02:18	47.749
07/22/02	17:03:18	47.550
07/22/02	17:04:18	49.142
07/22/02	17:05:18	47.692
07/22/02	17:06:18	48.374
07/22/02	17:07:18	49.825
07/22/02	17:08:18	49.967
07/22/02	17:09:18	48.317
07/22/02	17:10:18	48.687
07/22/02	17:11:18	48.886
07/22/02	17:12:18	49.142
07/22/02	17:13:18	48.829
07/22/02	17:14:18	46.810
07/22/02	17:15:18	45.474
07/22/02	17:16:18	47.806
07/22/02	17:17:18	50.109
07/22/02	17:18:18	49.825
07/22/02	17:19:18	49.085
07/22/02	17:20:18	48.886
07/22/02	17:21:18	50.536
07/22/02	17:22:18	48.972
07/22/02	17:23:18	48.772
07/22/02	17:24:18	48.829
07/22/02	17:25:18	50.593
07/22/02	17:26:18	49.825
07/22/02	17:27:18	50.849
07/22/02	17:28:18	50.024
07/22/02	17:29:18	49.597
07/22/02	17:30:18	49.654
07/22/02	17:31:18	49.455
07/22/02	17:32:18	48.772
07/22/02	17:33:18	49.341
07/22/02	17:34:18	49.654
07/22/02	17:35:18	49.540
07/22/02	17:36:18	49.199
07/22/02	17:37:18	47.862
07/22/02	17:38:18	51.815
07/22/02	17:39:18	47.294
07/22/02	17:40:18	47.436
07/22/02	17:41:18	49.142
07/22/02	17:42:18	48.972
07/22/02	17:43:18	47.009
07/22/02	17:44:18	47.237
07/22/02	17:45:18	48.374
07/22/02	17:46:18	48.573
07/22/02	17:47:18	48.886
07/22/02	17:48:18	49.967
07/22/02	17:49:18	48.630
07/22/02	17:50:18	49.455
07/22/02	17:51:18	48.374
07/22/02	17:52:18	51.218
07/22/02	17:53:18	47.237
07/22/02	17:54:18	47.294
07/22/02	17:55:18	47.550
07/22/02	17:56:18	47.749
07/22/02	17:57:18	46.810
07/22/02	17:58:18	47.379
07/22/02	17:59:18	46.924
07/22/02	18:00:18	46.867
07/22/02	18:01:18	47.436
07/22/02	18:02:18	47.123
07/22/02	18:03:18	46.440
07/22/02	18:04:18	45.843
07/22/02	18:05:18	48.431
07/22/02	18:06:18	46.867
07/22/02	18:07:18	47.493
07/22/02	18:08:18	48.062
07/22/02	18:09:18	49.768
07/22/02	18:10:18	48.204
07/22/02	18:11:18	46.554
07/22/02	18:12:18	46.412
07/22/02	18:13:18	48.005
07/22/02	18:14:18	47.322
07/22/02	18:15:18	48.317
07/22/02	18:16:18	48.431
07/22/02	18:17:18	47.123
07/22/02	18:18:18	48.118
07/22/02	18:19:18	47.635
07/22/02	18:20:18	47.066
07/22/02	18:21:18	47.692
07/22/02	18:22:18	48.317
07/22/02	18:23:18	51.048
07/22/02	18:24:18	49.256
07/22/02	18:25:18	47.436
07/22/02	18:26:18	47.493
07/22/02	18:27:18	49.142
07/22/02	18:28:18	49.455
07/22/02	18:29:18	49.028
07/22/02	18:30:18	48.062
07/22/02	18:31:18	48.829
07/22/02	18:32:18	48.630
07/22/02	18:33:18	47.009
07/22/02	18:34:18	50.166
07/22/02	18:35:18	18.542
07/22/02	18:36:18	35.179
07/22/02	18:37:18	34.610
07/22/02	18:38:18	34.468
07/22/02	18:39:18	32.961
07/22/02	18:40:18	34.354
07/22/02	18:41:18	48.431
07/22/02	18:42:18	50.166
07/22/02	18:43:18	48.062
07/22/02	18:44:18	48.374
07/22/02	18:45:18	47.862
07/22/02	18:46:18	48.630
07/22/02	18:47:18	44.450
07/22/02	18:48:18	45.587
07/22/02	18:49:18	45.417
07/22/02	18:50:18	47.749
07/22/02	18:51:18	45.218
07/22/02	18:52:18	46.924
07/22/02	18:53:18	46.924
07/22/02	18:54:18	46.412
07/22/02	18:55:18	46.099
07/22/02	18:56:18	46.867
07/22/02	18:57:18	48.374
07/22/02	18:58:18	45.872
07/22/02	18:59:18	43.710
07/22/02	19:00:18	45.730
07/22/02	19:01:18	45.417
07/22/02	19:02:18	44.336
07/22/02	19:03:18	45.303
07/22/02	19:04:18	45.303
07/22/02	19:05:18	44.706
07/22/02	19:06:18	45.843
07/22/02	19:07:18	44.393
07/22/02	19:08:18	45.929
07/22/02	19:09:18	44.023
07/22/02	19:10:18	45.786
07/22/02	19:11:18	46.867
07/22/02	19:12:18	44.791
07/22/02	19:13:18	49.540
07/22/02	19:14:18	47.635
07/22/02	19:15:18	46.668
07/22/02	19:16:18	48.317
07/22/02	19:17:18	47.578
07/22/02	19:18:18	48.005
07/22/02	19:19:18	46.867
07/22/02	19:20:18	48.062
07/22/02	19:21:18	48.772
07/22/02	19:22:18	47.862
07/22/02	19:23:18	47.862
07/22/02	19:24:18	45.929
07/22/02	19:25:18	47.635
07/22/02	19:26:18	48.005
07/22/02	19:27:18	46.668
07/22/02	19:28:18	46.497
07/22/02	19:29:18	48.062
07/22/02	19:30:18	48.261
07/22/02	19:31:18	48.517
07/22/02	19:32:18	47.948
07/22/02	19:33:18	45.929
07/22/02	19:34:18	47.436
07/22/02	19:35:18	47.066
07/22/02	19:36:18	46.611
07/22/02	19:37:18	47.948
07/22/02	19:38:18	47.436
07/22/02	19:39:18	47.379
07/22/02	19:40:18	46.668
07/22/02	19:41:18	48.431
07/22/02	19:42:18	44.791
07/22/02	19:43:18	47.123
07/22/02	19:44:18	45.047
07/22/02	19:45:18	47.806
07/22/02	19:46:18	47.692
07/22/02	19:47:18	49.199
07/22/02	19:48:18	46.355
07/22/02	19:49:18	49.284
07/22/02	19:50:18	46.981
07/22/02	19:51:18	47.550
07/22/02	19:52:18	47.550
07/22/02	19:53:18	48.005
07/22/02	19:54:18	48.630
07/22/02	19:55:18	48.460
07/22/02	19:56:18	47.066
07/22/02	19:57:18	47.436
07/22/02	19:58:18	48.062
07/22/02	19:59:18	46.611
07/22/02	20:00:18	47.891
07/22/02	20:01:18	46.725
07/22/02	20:02:18	47.862
07/22/02	20:03:18	46.497
07/22/02	20:04:18	46.924
07/22/02	20:05:18	48.716
07/22/02	20:06:18	46.042
07/22/02	20:07:18	48.261
07/22/02	20:08:18	45.843
07/22/02	20:09:18	46.924
07/22/02	20:10:18	49.199
07/22/02	20:11:18	45.218
07/22/02	20:12:18	47.692
07/22/02	20:13:18	45.872
07/22/02	20:14:18	48.261
07/22/02	20:15:18	46.668
07/22/02	20:16:18	47.436
07/22/02	20:17:18	46.867
07/22/02	20:18:18	47.692
07/22/02	20:19:18	48.829
07/22/02	20:20:18	47.322
07/22/02	20:21:18	47.066
07/22/02	20:22:18	47.891
07/22/02	20:23:18	47.322
07/22/02	20:24:18	47.009
07/22/02	20:25:18	47.379
07/22/02	20:26:18	47.123
07/22/02	20:27:18	46.440
07/22/02	20:28:18	47.692
07/22/02	20:29:18	47.123
07/22/02	20:30:18	48.829
07/22/02	20:31:18	46.298
07/22/02	20:32:18	47.180
07/22/02	20:33:18	48.005
07/22/02	20:34:18	48.573
07/22/02	20:35:18	46.241
07/22/02	20:36:18	47.550
07/22/02	20:37:18	45.872
07/22/02	20:38:18	47.123
07/22/02	20:39:18	48.687
07/22/02	20:40:18	48.374
07/22/02	20:41:18	47.578
07/22/02	20:42:18	47.806
07/22/02	20:43:18	47.493
07/22/02	20:44:18	48.317
07/22/02	20:45:18	45.474
07/22/02	20:46:18	47.379
07/22/02	20:47:18	47.806
07/22/02	20:48:18	46.753
07/22/02	20:49:18	45.417
07/22/02	20:50:18	48.972
07/22/02	20:51:18	47.436
07/22/02	20:52:18	47.578
07/22/02	20:53:18	47.322
07/22/02	20:54:18	49.085
07/22/02	20:55:18	50.109
07/22/02	20:56:18	49.967
07/22/02	20:57:18	49.199
07/22/02	20:58:18	50.536
07/22/02	20:59:18	48.460
07/22/02	21:00:18	48.687
07/22/02	21:01:18	48.687
07/22/02	21:02:18	48.147
07/22/02	21:03:18	47.948
07/22/02	21:04:18	44.791
07/22/02	21:05:18	48.005
07/22/02	21:06:18	47.237
07/22/02	21:07:18	47.009
07/22/02	21:08:18	46.981
07/22/02	21:09:18	47.322
07/22/02	21:10:18	48.517
07/22/02	21:11:18	47.180
07/22/02	21:12:18	46.924
07/22/02	21:13:18	47.009
07/22/02	21:14:18	46.668
07/22/02	21:15:18	47.493
07/22/02	21:16:18	48.204
07/22/02	21:17:18	48.005
07/22/02	21:18:18	48.630
07/22/02	21:19:18	48.118
07/22/02	21:20:18	48.517
07/22/02	21:21:18	47.749
07/22/02	21:22:18	46.412
07/22/02	21:23:18	49.768
07/22/02	21:24:18	47.862
07/22/02	21:25:18	49.711

LAGO VISTA AND CRYSTAL RIVER PKWY. - NO. 7553 cont.

Date	Time	Pres (PSI)
07/22/02	21:26:18	47.635
07/22/02	21:27:18	47.066
07/22/02	21:28:18	46.867
07/22/02	21:29:18	48.431
07/22/02	21:30:18	47.294
07/22/02	21:31:18	48.204
07/22/02	21:32:18	46.668
07/22/02	21:33:18	47.948
07/22/02	21:34:18	48.374
07/22/02	21:35:18	47.123
07/22/02	21:36:18	49.540
07/22/02	21:37:18	48.972
07/22/02	21:38:18	47.578
07/22/02	21:39:18	48.687
07/22/02	21:40:18	47.550
07/22/02	21:41:18	49.512
07/22/02	21:42:18	49.398
07/22/02	21:43:18	47.436
07/22/02	21:44:18	48.943
07/22/02	21:45:18	47.692
07/22/02	21:46:18	48.716
07/22/02	21:47:18	48.118
07/22/02	21:48:18	49.910
07/22/02	21:49:18	50.081
07/22/02	21:50:18	49.825
07/22/02	21:51:18	48.431
07/22/02	21:52:18	49.398
07/22/02	21:53:18	50.166
07/22/02	21:54:18	50.792
07/22/02	21:55:18	50.735
07/22/02	21:56:18	49.910
07/22/02	21:57:18	49.768
07/22/02	21:58:18	48.972
07/22/02	21:59:18	51.247
07/22/02	22:00:18	48.204
07/22/02	22:01:18	48.317
07/22/02	22:02:18	48.716
07/22/02	22:03:18	48.118
07/22/02	22:04:18	49.142
07/22/02	22:05:18	46.668
07/22/02	22:06:18	37.710
07/22/02	22:07:18	35.179
07/22/02	22:08:18	47.578
07/22/02	22:09:18	49.398
07/22/02	22:10:18	46.099
07/22/02	22:11:18	47.550
07/22/02	22:12:18	46.554
07/22/02	22:13:18	47.379
07/22/02	22:14:18	46.725
07/22/02	22:15:18	47.550
07/22/02	22:16:18	47.806
07/22/02	22:17:18	47.635
07/22/02	22:18:18	47.322
07/22/02	22:19:18	55.655
07/22/02	22:20:18	47.009
07/22/02	22:21:18	48.431
07/22/02	22:22:18	48.630
07/22/02	22:23:18	49.512
07/22/02	22:24:18	47.692
07/22/02	22:25:18	48.716
07/22/02	22:26:18	49.199
07/22/02	22:27:18	49.085
07/22/02	22:28:18	48.460
07/22/02	22:29:18	50.393
07/22/02	22:30:18	49.910
07/22/02	22:31:18	50.166

Date	Time	Pres (PSI)
07/22/02	22:32:18	48.573
07/22/02	22:33:18	49.455
07/22/02	22:34:18	51.104
07/22/02	22:35:18	49.768
07/22/02	22:36:18	50.337
07/22/02	22:37:18	50.337
07/22/02	22:38:18	50.735
07/22/02	22:39:18	50.081
07/22/02	22:40:18	51.247
07/22/02	22:41:18	51.474
07/22/02	22:42:18	50.792
07/22/02	22:43:18	49.825
07/22/02	22:44:18	50.536
07/22/02	22:45:18	49.853
07/22/02	22:46:18	51.474
07/22/02	22:47:18	50.962
07/22/02	22:48:18	51.787
07/22/02	22:49:18	51.872
07/22/02	22:50:18	51.787
07/22/02	22:51:18	50.479
07/22/02	22:52:18	52.100
07/22/02	22:53:18	49.853
07/22/02	22:54:18	43.142
07/22/02	22:55:18	41.492
07/22/02	22:56:18	39.359
07/22/02	22:57:18	37.710
07/22/02	22:58:18	38.506
07/22/02	22:59:18	46.412
07/22/02	23:00:18	49.825
07/22/02	23:01:18	48.374
07/22/02	23:02:18	47.493
07/22/02	23:03:18	48.886
07/22/02	23:04:18	48.147
07/22/02	23:05:18	49.398
07/22/02	23:06:18	47.749
07/22/02	23:07:18	48.062
07/22/02	23:08:18	47.891
07/22/02	23:09:18	48.460
07/22/02	23:10:18	48.886
07/22/02	23:11:18	49.284
07/22/02	23:12:18	48.261
07/22/02	23:13:18	49.398
07/22/02	23:14:18	48.687
07/22/02	23:15:18	48.147
07/22/02	23:16:18	49.284
07/22/02	23:17:18	48.431
07/22/02	23:18:18	49.398
07/22/02	23:19:18	48.460
07/22/02	23:20:18	48.687
07/22/02	23:21:18	48.118
07/22/02	23:22:18	48.972
07/22/02	23:23:18	47.862
07/22/02	23:24:18	48.431
07/22/02	23:25:18	49.085
07/22/02	23:26:18	48.317
07/22/02	23:27:18	49.028
07/22/02	23:28:18	49.199
07/22/02	23:29:18	50.223
07/22/02	23:30:18	48.886
07/22/02	23:31:18	48.772
07/22/02	23:32:18	47.322
07/22/02	23:33:18	49.398
07/22/02	23:34:18	48.261
07/22/02	23:35:18	48.118
07/22/02	23:36:18	57.816
07/22/02	23:37:18	47.806

Date	Time	Pres (PSI)
07/22/02	23:38:18	51.673
07/22/02	23:39:18	51.218
07/22/02	23:40:18	51.730
07/22/02	23:41:18	51.986
07/22/02	23:42:18	51.247
07/22/02	23:43:18	50.991
07/22/02	23:44:18	50.991
07/22/02	23:45:18	51.559
07/22/02	23:46:18	51.787
07/22/02	23:47:18	52.498
07/22/02	23:48:18	51.559
07/22/02	23:49:18	52.384
07/22/02	23:50:18	52.128
07/22/02	23:51:18	52.811
07/22/02	23:52:18	52.925
07/22/02	23:53:18	51.247
07/22/02	23:54:18	52.441
07/22/02	23:55:18	51.559
07/22/02	23:56:18	52.697
07/22/02	23:57:18	52.925
07/22/02	23:58:18	51.929
07/22/02	23:59:18	52.356
07/23/02	00:00:18	52.868
07/23/02	00:01:18	51.417
07/23/02	00:02:18	52.669
07/23/02	00:03:18	51.929
07/23/02	00:04:18	52.953
07/23/02	00:05:18	52.128
07/23/02	00:06:18	51.531
07/23/02	00:07:18	52.128
07/23/02	00:08:18	51.673
07/23/02	00:09:18	52.697
07/23/02	00:10:18	53.380
07/23/02	00:11:18	55.797
07/23/02	00:12:18	53.835
07/23/02	00:13:18	53.493
07/23/02	00:14:18	54.773
07/23/02	00:15:18	53.806
07/23/02	00:16:18	54.375
07/23/02	00:17:18	54.091
07/23/02	00:18:18	54.403
07/23/02	00:19:18	54.773
07/23/02	00:20:18	53.579
07/23/02	00:21:18	55.029
07/23/02	00:22:18	54.204
07/23/02	00:23:18	54.375
07/23/02	00:24:18	55.228
07/23/02	00:25:18	54.403
07/23/02	00:26:18	54.204
07/23/02	00:27:18	54.318
07/23/02	00:28:18	54.147
07/23/02	00:29:18	54.147
07/23/02	00:30:18	53.636
07/23/02	00:31:18	55.228
07/23/02	00:32:18	54.204
07/23/02	00:33:18	53.266
07/23/02	00:34:18	54.318
07/23/02	00:35:18	53.436
07/23/02	00:36:18	54.403
07/23/02	00:37:18	55.200
07/23/02	00:38:18	54.147
07/23/02	00:39:18	54.716
07/23/02	00:40:18	54.517
07/23/02	00:41:18	54.147
07/23/02	00:42:18	54.972
07/23/02	00:43:18	53.493

Date	Time	Pres (PSI)
07/23/02	00:44:18	54.460
07/23/02	00:45:18	54.887
07/23/02	00:46:18	54.659
07/23/02	00:47:18	54.659
07/23/02	00:48:18	55.399
07/23/02	00:49:18	54.574
07/23/02	00:50:18	53.380
07/23/02	00:51:18	54.944
07/23/02	00:52:18	54.517
07/23/02	00:53:18	54.147
07/23/02	00:54:18	55.456
07/23/02	00:55:18	54.517
07/23/02	00:56:18	55.228
07/23/02	00:57:18	53.493
07/23/02	00:58:18	53.891
07/23/02	00:59:18	53.692
07/23/02	01:00:18	54.830
07/23/02	01:01:18	53.636
07/23/02	01:02:18	53.835
07/23/02	01:03:18	55.086
07/23/02	01:04:18	54.460
07/23/02	01:05:18	53.749
07/23/02	01:06:18	54.403
07/23/02	01:07:18	53.237
07/23/02	01:08:18	54.972
07/23/02	01:09:18	53.749
07/23/02	01:10:18	54.005
07/23/02	01:11:18	38.705
07/23/02	01:12:18	48.062
07/23/02	01:13:18	49.654
07/23/02	01:14:18	58.243
07/23/02	01:15:18	53.436
07/23/02	01:16:18	53.493
07/23/02	01:17:18	54.716
07/23/02	01:18:18	54.204
07/23/02	01:19:18	53.835
07/23/02	01:20:18	54.375
07/23/02	01:21:18	54.005
07/23/02	01:22:18	53.891
07/23/02	01:23:18	53.806
07/23/02	01:24:18	53.891
07/23/02	01:25:18	54.005
07/23/02	01:26:18	53.835
07/23/02	01:27:18	53.237
07/23/02	01:28:18	54.318
07/23/02	01:29:18	54.318
07/23/02	01:30:18	54.261
07/23/02	01:31:18	53.124
07/23/02	01:32:18	53.806
07/23/02	01:33:18	54.318
07/23/02	01:34:18	54.261
07/23/02	01:35:18	53.749
07/23/02	01:36:18	54.261
07/23/02	01:37:18	54.574
07/23/02	01:38:18	54.460
07/23/02	01:39:18	54.517
07/23/02	01:40:18	54.147
07/23/02	01:41:18	54.944
07/23/02	01:42:18	54.716
07/23/02	01:43:18	54.944
07/23/02	01:44:18	55.086
07/23/02	01:45:18	54.773
07/23/02	01:46:18	54.517
07/23/02	01:47:18	54.944
07/23/02	01:48:18	54.716
07/23/02	01:49:18	55.399

LAGO VISTA AND CRYSTAL RIVER PKWY. - NO. 7553 cont.

Date	Time	Pres (PSI)
07/23/02	01:50:18	55.285
07/23/02	01:51:18	54.375
07/23/02	01:52:18	54.659
07/23/02	01:53:18	56.024
07/23/02	01:54:18	55.598
07/23/02	01:55:18	55.285
07/23/02	01:56:18	54.773
07/23/02	01:57:18	54.318
07/23/02	01:58:18	54.773
07/23/02	01:59:18	54.944
07/23/02	02:00:18	54.318
07/23/02	02:01:18	54.716
07/23/02	02:02:18	54.631
07/23/02	02:03:18	55.086
07/23/02	02:04:18	54.887
07/23/02	02:05:18	55.200
07/23/02	02:06:18	54.460
07/23/02	02:07:18	54.659
07/23/02	02:08:18	55.200
07/23/02	02:09:18	54.318
07/23/02	02:10:18	54.005
07/23/02	02:11:18	54.460
07/23/02	02:12:18	55.228
07/23/02	02:13:18	54.659
07/23/02	02:14:18	53.749
07/23/02	02:15:18	55.285
07/23/02	02:16:18	54.375
07/23/02	02:17:18	54.375
07/23/02	02:18:18	55.285
07/23/02	02:19:18	54.631
07/23/02	02:20:18	54.375
07/23/02	02:21:18	54.716
07/23/02	02:22:18	55.655
07/23/02	02:23:18	54.631
07/23/02	02:24:18	55.086
07/23/02	02:25:18	54.716
07/23/02	02:26:18	55.228
07/23/02	02:27:18	53.749
07/23/02	02:28:18	54.659
07/23/02	02:29:18	54.204
07/23/02	02:30:18	54.375
07/23/02	02:31:18	54.147
07/23/02	02:32:18	53.636
07/23/02	02:33:18	54.972
07/23/02	02:34:18	54.261
07/23/02	02:35:18	54.318
07/23/02	02:36:18	54.887
07/23/02	02:37:18	55.768
07/23/02	02:38:18	54.318
07/23/02	02:39:18	54.830
07/23/02	02:40:18	53.010
07/23/02	02:41:18	54.716
07/23/02	02:42:18	55.029
07/23/02	02:43:18	53.692
07/23/02	02:44:18	54.062
07/23/02	02:45:18	54.261
07/23/02	02:46:18	53.948
07/23/02	02:47:18	52.299
07/23/02	02:48:18	55.598
07/23/02	02:49:18	53.237
07/23/02	02:50:18	54.062
07/23/02	02:51:18	55.086
07/23/02	02:52:18	54.062
07/23/02	02:53:18	53.692
07/23/02	02:54:18	54.574
07/23/02	02:55:18	53.522
07/23/02	02:56:18	54.091
07/23/02	02:57:18	54.062
07/23/02	02:58:18	53.835
07/23/02	02:59:18	54.147
07/23/02	03:00:18	53.266
07/23/02	03:01:18	54.375
07/23/02	03:02:18	52.669
07/23/02	03:03:18	54.574
07/23/02	03:04:18	54.005
07/23/02	03:05:18	53.835
07/23/02	03:06:18	53.636
07/23/02	03:07:18	52.242
07/23/02	03:08:18	54.375
07/23/02	03:09:18	57.105
07/23/02	03:10:18	55.029
07/23/02	03:11:18	54.318
07/23/02	03:12:18	55.285
07/23/02	03:13:18	54.944
07/23/02	03:14:18	55.399
07/23/02	03:15:18	54.517
07/23/02	03:16:18	54.318
07/23/02	03:17:18	54.318
07/23/02	03:18:18	54.517
07/23/02	03:19:18	54.091
07/23/02	03:20:18	54.005
07/23/02	03:21:18	54.517
07/23/02	03:22:18	54.716
07/23/02	03:23:18	54.375
07/23/02	03:24:18	56.366
07/23/02	03:25:18	55.029
07/23/02	03:26:18	54.972
07/23/02	03:27:18	54.005
07/23/02	03:28:18	54.830
07/23/02	03:29:18	55.512
07/23/02	03:30:18	55.086
07/23/02	03:31:18	55.029
07/23/02	03:32:18	54.460
07/23/02	03:33:18	54.375
07/23/02	03:34:18	55.655
07/23/02	03:35:18	54.091
07/23/02	03:36:18	55.086
07/23/02	03:37:18	54.659
07/23/02	03:38:18	54.631
07/23/02	03:39:18	55.086
07/23/02	03:40:18	54.773
07/23/02	03:41:18	53.948
07/23/02	03:42:18	55.342
07/23/02	03:43:18	53.891
07/23/02	03:44:18	55.086
07/23/02	03:45:18	55.712
07/23/02	03:46:18	53.579
07/23/02	03:47:18	54.830
07/23/02	03:48:18	54.318
07/23/02	03:49:18	54.517
07/23/02	03:50:18	54.944
07/23/02	03:51:18	54.261
07/23/02	03:52:18	54.403
07/23/02	03:53:18	54.659
07/23/02	03:54:18	54.716
07/23/02	03:55:18	54.375
07/23/02	03:56:18	54.716
07/23/02	03:57:18	53.124
07/23/02	03:58:18	54.062
07/23/02	03:59:18	54.062
07/23/02	04:00:18	54.574
07/23/02	04:01:18	54.062
07/23/02	04:02:18	54.261
07/23/02	04:03:18	54.318
07/23/02	04:04:18	54.318
07/23/02	04:05:18	54.147
07/23/02	04:06:18	54.091
07/23/02	04:07:18	54.062
07/23/02	04:08:18	53.835
07/23/02	04:09:18	54.887
07/23/02	04:10:18	54.147
07/23/02	04:11:18	54.631
07/23/02	04:12:18	54.261
07/23/02	04:13:18	54.204
07/23/02	04:14:18	54.147
07/23/02	04:15:18	54.375
07/23/02	04:16:18	53.806
07/23/02	04:17:18	53.692
07/23/02	04:18:18	54.375
07/23/02	04:19:18	54.574
07/23/02	04:20:18	54.005
07/23/02	04:21:18	54.631
07/23/02	04:22:18	53.806
07/23/02	04:23:18	54.403
07/23/02	04:24:18	54.403
07/23/02	04:25:18	54.517
07/23/02	04:26:18	53.380
07/23/02	04:27:18	53.493
07/23/02	04:28:18	54.460
07/23/02	04:29:18	53.380
07/23/02	04:30:18	54.375
07/23/02	04:31:18	53.579
07/23/02	04:32:18	54.375
07/23/02	04:33:18	53.636
07/23/02	04:34:18	54.375
07/23/02	04:35:18	54.403
07/23/02	04:36:18	54.375
07/23/02	04:37:18	54.375
07/23/02	04:38:18	55.200
07/23/02	04:39:18	53.835
07/23/02	04:40:18	54.147
07/23/02	04:41:18	53.948
07/23/02	04:42:18	54.574
07/23/02	04:43:18	55.029
07/23/02	04:44:18	54.375
07/23/02	04:45:18	53.436
07/23/02	04:46:18	55.143
07/23/02	04:47:18	52.384
07/23/02	04:48:18	54.972
07/23/02	04:49:18	54.887
07/23/02	04:50:18	53.806
07/23/02	04:51:18	55.285
07/23/02	04:52:18	54.716
07/23/02	04:53:18	53.948
07/23/02	04:54:18	54.517
07/23/02	04:55:18	54.005
07/23/02	04:56:18	55.228
07/23/02	04:57:18	54.147
07/23/02	04:58:18	38.535
07/23/02	04:59:18	54.460
07/23/02	05:00:18	51.872
07/23/02	05:01:18	50.792
07/23/02	05:02:18	51.161
07/23/02	05:03:18	51.218
07/23/02	05:04:18	50.337
07/23/02	05:05:18	50.678
07/23/02	05:06:18	50.109
07/23/02	05:07:18	48.573
07/23/02	05:08:18	49.455
07/23/02	05:09:18	48.829
07/23/02	05:10:18	48.118
07/23/02	05:11:18	48.573
07/23/02	05:12:18	49.085
07/23/02	05:13:18	48.573
07/23/02	05:14:18	48.772
07/23/02	05:15:18	48.517
07/23/02	05:16:18	48.886
07/23/02	05:17:18	48.943
07/23/02	05:18:18	49.256
07/23/02	05:19:18	49.853
07/23/02	05:20:18	49.199
07/23/02	05:21:18	49.028
07/23/02	05:22:18	49.540
07/23/02	05:23:18	48.204
07/23/02	05:24:18	48.943
07/23/02	05:25:18	48.716
07/23/02	05:26:18	47.891
07/23/02	05:27:18	45.616
07/23/02	05:28:18	47.237
07/23/02	05:29:18	47.806
07/23/02	05:30:18	47.379
07/23/02	05:31:18	47.123
07/23/02	05:32:18	47.322
07/23/02	05:33:18	46.440
07/23/02	05:34:18	47.009
07/23/02	05:35:18	46.924
07/23/02	05:36:18	46.725
07/23/02	05:37:18	46.355
07/23/02	05:38:18	44.279
07/23/02	05:39:18	45.616
07/23/02	05:40:18	45.872
07/23/02	05:41:18	45.047
07/23/02	05:42:18	46.042
07/23/02	05:43:18	44.023
07/23/02	05:44:18	43.398
07/23/02	05:45:18	42.118
07/23/02	05:46:18	43.255
07/23/02	05:47:18	42.999
07/23/02	05:48:18	42.317
07/23/02	05:49:18	59.266
07/23/02	05:50:18	49.455
07/23/02	05:51:18	51.559
07/23/02	05:52:18	53.266
07/23/02	05:53:18	52.384
07/23/02	05:54:18	52.953
07/23/02	05:55:18	52.299
07/23/02	05:56:18	51.673
07/23/02	05:57:18	53.180
07/23/02	05:58:18	51.872
07/23/02	05:59:18	52.356
07/23/02	06:00:18	51.986
07/23/02	06:01:18	51.161
07/23/02	06:02:18	50.905
07/23/02	06:03:18	51.360
07/23/02	06:04:18	53.436
07/23/02	06:05:18	51.815
07/23/02	06:06:18	50.280
07/23/02	06:07:18	50.905
07/23/02	06:08:18	51.929
07/23/02	06:09:18	50.166
07/23/02	06:10:18	51.872
07/23/02	06:11:18	50.223
07/23/02	06:12:18	51.986
07/23/02	06:13:18	51.104

LAGO VISTA AND CRYSTAL RIVER PKWY. - NO. 7553 cont.

Date	Time	Pres (PSI)	Date	Time	Pres (PSI)	Date	Time	Pres (PSI)	Date	Time	Pres (PSI)
07/23/02	06:14:18	51.531	07/23/02	07:20:18	47.891	07/23/02	08:26:18	48.147	07/23/02	09:32:18	45.843
07/23/02	06:15:18	51.360	07/23/02	07:21:18	46.753	07/23/02	08:27:18	49.142	07/23/02	09:33:18	45.985
07/23/02	06:16:18	50.849	07/23/02	07:22:18	47.749	07/23/02	08:28:18	48.062	07/23/02	09:34:18	43.767
07/23/02	06:17:18	49.512	07/23/02	07:23:18	47.948	07/23/02	08:29:18	48.431	07/23/02	09:35:18	45.047
07/23/02	06:18:18	50.849	07/23/02	07:24:18	46.099	07/23/02	08:30:18	48.943	07/23/02	09:36:18	50.393
07/23/02	06:19:18	49.910	07/23/02	07:25:18	46.924	07/23/02	08:31:18	49.455	07/23/02	09:37:18	47.009
07/23/02	06:20:18	51.616	07/23/02	07:26:18	47.692	07/23/02	08:32:18	49.085	07/23/02	09:38:18	48.630
07/23/02	06:21:18	48.062	07/23/02	07:27:18	47.891	07/23/02	08:33:18	49.910	07/23/02	09:39:18	47.436
07/23/02	06:22:18	51.986	07/23/02	07:28:18	47.322	07/23/02	08:34:18	50.593	07/23/02	09:40:18	46.497
07/23/02	06:23:18	51.218	07/23/02	07:29:18	47.493	07/23/02	08:35:18	49.142	07/23/02	09:41:18	45.587
07/23/02	06:24:18	20.447	07/23/02	07:30:18	45.275	07/23/02	08:36:18	48.374	07/23/02	09:42:18	48.317
07/23/02	06:25:18	39.644	07/23/02	07:31:18	44.649	07/23/02	08:37:18	48.687	07/23/02	09:43:18	48.630
07/23/02	06:26:18	40.923	07/23/02	07:32:18	45.673	07/23/02	08:38:18	49.199	07/23/02	09:44:18	47.550
07/23/02	06:27:18	53.067	07/23/02	07:33:18	47.237	07/23/02	08:39:18	48.716	07/23/02	09:45:18	47.294
07/23/02	06:28:18	49.967	07/23/02	07:34:18	48.943	07/23/02	08:40:18	48.431	07/23/02	09:46:18	45.417
07/23/02	06:29:18	49.142	07/23/02	07:35:18	46.981	07/23/02	08:41:18	47.948	07/23/02	09:47:18	49.028
07/23/02	06:30:18	49.540	07/23/02	07:36:18	47.806	07/23/02	08:42:18	51.304	07/23/02	09:48:18	47.862
07/23/02	06:31:18	49.654	07/23/02	07:37:18	48.261	07/23/02	08:43:18	48.573	07/23/02	09:49:18	49.825
07/23/02	06:32:18	49.512	07/23/02	07:38:18	47.891	07/23/02	08:44:18	44.165	07/23/02	09:50:18	49.085
07/23/02	06:33:18	49.142	07/23/02	07:39:18	51.247	07/23/02	08:45:18	47.066	07/23/02	09:51:18	49.028
07/23/02	06:34:18	50.422	07/23/02	07:40:18	48.431	07/23/02	08:46:18	45.275	07/23/02	09:52:18	51.048
07/23/02	06:35:18	50.393	07/23/02	07:41:18	49.455	07/23/02	08:47:18	44.478	07/23/02	09:53:18	49.654
07/23/02	06:36:18	48.431	07/23/02	07:42:18	49.398	07/23/02	08:48:18	45.474	07/23/02	09:54:18	44.848
07/23/02	06:37:18	49.142	07/23/02	07:43:18	48.943	07/23/02	08:49:18	47.862	07/23/02	09:55:18	39.587
07/23/02	06:38:18	50.337	07/23/02	07:44:18	48.147	07/23/02	08:50:18	46.554	07/23/02	09:56:18	43.085
07/23/02	06:39:18	50.422	07/23/02	07:45:18	47.066	07/23/02	08:51:18	47.635	07/23/02	09:57:18	43.085
07/23/02	06:40:18	47.635	07/23/02	07:46:18	46.042	07/23/02	08:52:18	48.261	07/23/02	09:58:18	39.843
07/23/02	06:41:18	46.924	07/23/02	07:47:18	50.223	07/23/02	08:53:18	46.753	07/23/02	09:59:18	42.999
07/23/02	06:42:18	51.104	07/23/02	07:48:18	48.147	07/23/02	08:54:18	48.261	07/23/02	10:00:18	41.350
07/23/02	06:43:18	48.573	07/23/02	07:49:18	48.630	07/23/02	08:55:18	47.009	07/23/02	10:01:18	44.535
07/23/02	06:44:18	49.597	07/23/02	07:50:18	49.540	07/23/02	08:56:18	48.204	07/23/02	10:02:18	41.236
07/23/02	06:45:18	49.711	07/23/02	07:51:18	50.081	07/23/02	08:57:18	44.592	07/23/02	10:03:18	43.142
07/23/02	06:46:18	47.180	07/23/02	07:52:18	49.199	07/23/02	08:58:18	39.274	07/23/02	10:04:18	40.667
07/23/02	06:47:18	49.341	07/23/02	07:53:18	51.104	07/23/02	08:59:18	39.928	07/23/02	10:05:18	41.634
07/23/02	06:48:18	50.337	07/23/02	07:54:18	46.810	07/23/02	09:00:18	39.416	07/23/02	10:06:18	41.350
07/23/02	06:49:18	47.806	07/23/02	07:55:18	47.635	07/23/02	09:01:18	38.904	07/23/02	10:07:18	42.061
07/23/02	06:50:18	49.199	07/23/02	07:56:18	48.374	07/23/02	09:02:18	38.279	07/23/02	10:08:18	42.573
07/23/02	06:51:18	47.180	07/23/02	07:57:18	46.156	07/23/02	09:03:18	41.037	07/23/02	10:09:18	44.222
07/23/02	06:52:18	47.692	07/23/02	07:58:18	49.455	07/23/02	09:04:18	38.023	07/23/02	10:10:18	42.203
07/23/02	06:53:18	48.317	07/23/02	07:59:18	47.948	07/23/02	09:05:18	38.392	07/23/02	10:11:18	41.691
07/23/02	06:54:18	49.910	07/23/02	08:00:18	49.455	07/23/02	09:06:18	40.156	07/23/02	10:12:18	41.378
07/23/02	06:55:18	48.630	07/23/02	08:01:18	48.460	07/23/02	09:07:18	37.966	07/23/02	10:13:18	41.037
07/23/02	06:56:18	48.687	07/23/02	08:02:18	51.104	07/23/02	09:08:18	40.298	07/23/02	10:14:18	42.203
07/23/02	06:57:18	48.517	07/23/02	08:03:18	50.649	07/23/02	09:09:18	38.705	07/23/02	10:15:18	41.350
07/23/02	06:58:18	48.573	07/23/02	08:04:18	50.109	07/23/02	09:10:18	38.222	07/23/02	10:16:18	41.748
07/23/02	06:59:18	47.635	07/23/02	08:05:18	50.223	07/23/02	09:11:18	38.136	07/23/02	10:17:18	42.772
07/23/02	07:00:18	47.891	07/23/02	08:06:18	45.218	07/23/02	09:12:18	36.572	07/23/02	10:18:18	44.592
07/23/02	07:01:18	46.099	07/23/02	08:07:18	47.749	07/23/02	09:13:18	37.880	07/23/02	10:19:18	43.028
07/23/02	07:02:18	46.725	07/23/02	08:08:18	48.062	07/23/02	09:14:18	39.075	07/23/02	10:20:18	51.616
07/23/02	07:03:18	46.440	07/23/02	08:09:18	47.635	07/23/02	09:15:18	40.411	07/23/02	10:21:18	49.597
07/23/02	07:04:18	45.616	07/23/02	08:10:18	52.242	07/23/02	09:16:18	38.136	07/23/02	10:22:18	49.284
07/23/02	07:05:18	47.635	07/23/02	08:11:18	50.991	07/23/02	09:17:18	37.198	07/23/02	10:23:18	50.393
07/23/02	07:06:18	48.147	07/23/02	08:12:18	51.161	07/23/02	09:18:18	39.103	07/23/02	10:24:18	48.772
07/23/02	07:07:18	47.322	07/23/02	08:13:18	49.085	07/23/02	09:19:18	38.904	07/23/02	10:25:18	48.147
07/23/02	07:08:18	48.147	07/23/02	08:14:18	50.536	07/23/02	09:20:18	36.629	07/23/02	10:26:18	47.635
07/23/02	07:09:18	45.730	07/23/02	08:15:18	50.166	07/23/02	09:21:18	40.042	07/23/02	10:27:18	49.853
07/23/02	07:10:18	46.810	07/23/02	08:16:18	50.081	07/23/02	09:22:18	39.416	07/23/02	10:28:18	47.948
07/23/02	07:11:18	45.218	07/23/02	08:17:18	49.540	07/23/02	09:23:18	40.724	07/23/02	10:29:18	45.872
07/23/02	07:12:18	44.848	07/23/02	08:18:18	50.536	07/23/02	09:24:18	43.966	07/23/02	10:30:18	47.635
07/23/02	07:13:18	45.587	07/23/02	08:19:18	50.081	07/23/02	09:25:18	49.512	07/23/02	10:31:18	47.891
07/23/02	07:14:18	44.706	07/23/02	08:20:18	52.498	07/23/02	09:26:18	45.730	07/23/02	10:32:18	45.530
07/23/02	07:15:18	44.706	07/23/02	08:21:18	50.109	07/23/02	09:27:18	48.772	07/23/02	10:33:18	45.843
07/23/02	07:16:18	45.161	07/23/02	08:22:18	48.460	07/23/02	09:28:18	47.948	07/23/02	10:34:18	50.479
07/23/02	07:17:18	44.478	07/23/02	08:23:18	50.479	07/23/02	09:29:18	47.009	07/23/02	10:35:18	48.943
07/23/02	07:18:18	43.398	07/23/02	08:24:18	50.223	07/23/02	09:30:18	45.303	07/23/02	10:36:18	48.118
07/23/02	07:19:18	44.222	07/23/02	08:25:18	50.849	07/23/02	09:31:18	45.417	07/23/02	10:37:18	48.772

LAGO VISTA AND CRYSTAL RIVER PKWY. - NO. 7553 cont.

Date	Time	Pres (PSI)
07/23/02	10:38:18	47.862
07/23/02	10:39:18	47.891
07/23/02	10:40:18	47.891
07/23/02	10:41:18	50.280
07/23/02	10:42:18	48.972
07/23/02	10:43:18	50.223
07/23/02	10:44:18	48.886
07/23/02	10:45:18	47.009
07/23/02	10:46:18	47.749
07/23/02	10:47:18	47.436
07/23/02	10:48:18	46.981
07/23/02	10:49:18	45.303
07/23/02	10:50:18	45.872
07/23/02	10:51:18	47.009
07/23/02	10:52:18	48.829
07/23/02	10:53:18	46.753
07/23/02	10:54:18	44.962
07/23/02	10:55:18	45.929
07/23/02	10:56:18	47.862
07/23/02	10:57:18	44.905
07/23/02	10:58:18	43.881
07/23/02	10:59:18	46.810
07/23/02	11:00:18	43.341
07/23/02	11:01:18	45.530
07/23/02	11:02:18	47.294
07/23/02	11:03:18	47.322
07/23/02	11:04:18	29.861
07/23/02	11:05:18	30.742
07/23/02	11:06:18	50.223
07/23/02	11:07:18	44.478
07/23/02	11:08:18	44.905
07/23/02	11:09:18	46.981
07/23/02	11:10:18	44.905
07/23/02	11:11:18	46.099
07/23/02	11:12:18	46.185
07/23/02	11:13:18	45.673
07/23/02	11:14:18	45.360
07/23/02	11:15:18	44.962
07/23/02	11:16:18	46.042
07/23/02	11:17:18	43.653
07/23/02	11:18:18	44.848
07/23/02	11:19:18	44.080
07/23/02	11:20:18	43.511
07/23/02	11:21:18	44.962
07/23/02	11:22:18	42.004
07/23/02	11:23:18	46.497
07/23/02	11:24:18	46.185
07/23/02	11:25:18	45.587
07/23/02	11:26:18	46.412
07/23/02	11:27:18	47.180
07/23/02	11:28:18	46.611
07/23/02	11:29:18	44.393
07/23/02	11:30:18	45.616
07/23/02	11:31:18	46.924
07/23/02	11:32:18	46.753
07/23/02	11:33:18	45.872
07/23/02	11:34:18	47.379
07/23/02	11:35:18	47.294
07/23/02	11:36:18	45.417
07/23/02	11:37:18	48.374
07/23/02	11:38:18	46.725
07/23/02	11:39:18	47.123
07/23/02	11:40:18	47.806
07/23/02	11:41:18	47.635
07/23/02	11:42:18	45.786
07/23/02	11:43:18	46.412
07/23/02	11:44:18	47.379
07/23/02	11:45:18	47.436
07/23/02	11:46:18	47.009
07/23/02	11:47:18	46.497
07/23/02	11:48:18	47.550
07/23/02	11:49:18	46.668
07/23/02	11:50:18	46.924
07/23/02	11:51:18	47.436
07/23/02	11:52:18	43.568
07/23/02	11:53:18	46.725
07/23/02	11:54:18	47.180
07/23/02	11:55:18	47.294
07/23/02	11:56:18	46.497
07/23/02	11:57:18	47.123
07/23/02	11:58:18	48.005
07/23/02	11:59:18	45.104
07/23/02	12:00:18	47.237
07/23/02	12:01:18	47.948
07/23/02	12:02:18	46.981
07/23/02	12:03:18	46.668
07/23/02	12:04:18	46.241
07/23/02	12:05:18	46.042
07/23/02	12:06:18	46.042
07/23/02	12:07:18	45.530
07/23/02	12:08:18	48.261
07/23/02	12:09:18	46.412
07/23/02	12:10:18	45.872
07/23/02	12:11:18	47.322
07/23/02	12:12:18	46.355
07/23/02	12:13:18	46.412
07/23/02	12:14:18	47.379
07/23/02	12:15:18	46.554
07/23/02	12:16:18	46.185
07/23/02	12:17:18	44.734
07/23/02	12:18:18	46.867
07/23/02	12:19:18	47.322
07/23/02	12:20:18	44.279
07/23/02	12:21:18	46.241
07/23/02	12:22:18	46.668
07/23/02	12:23:18	46.554
07/23/02	12:24:18	47.493
07/23/02	12:25:18	44.791
07/23/02	12:26:18	47.862
07/23/02	12:27:18	45.730
07/23/02	12:28:18	47.749
07/23/02	12:29:18	45.730
07/23/02	12:30:18	46.810
07/23/02	12:31:18	47.322
07/23/02	12:32:18	47.180
07/23/02	12:33:18	45.872
07/23/02	12:34:18	48.573
07/23/02	12:35:18	46.924
07/23/02	12:36:18	46.810
07/23/02	12:37:18	46.497
07/23/02	12:38:18	47.436
07/23/02	12:39:18	46.611
07/23/02	12:40:18	48.005
07/23/02	12:41:18	46.241
07/23/02	12:42:18	47.550
07/23/02	12:43:18	46.355
07/23/02	12:44:18	48.630
07/23/02	12:45:18	49.654
07/23/02	12:46:18	45.360
07/23/02	12:47:18	49.142
07/23/02	12:48:18	48.431
07/23/02	12:49:18	48.118
07/23/02	12:50:18	49.256
07/23/02	12:51:18	47.692
07/23/02	12:52:18	47.948
07/23/02	12:53:18	46.725
07/23/02	12:54:18	46.298
07/23/02	12:55:18	45.929
07/23/02	12:56:18	46.981
07/23/02	12:57:18	44.535
07/23/02	12:58:18	45.843
07/23/02	12:59:18	46.497
07/23/02	13:00:18	46.440
07/23/02	13:01:18	48.431
07/23/02	13:02:18	46.554
07/23/02	13:03:18	47.237
07/23/02	13:04:18	46.412
07/23/02	13:05:18	46.725
07/23/02	13:06:18	46.725
07/23/02	13:07:18	44.791
07/23/02	13:08:18	48.772
07/23/02	13:09:18	22.154
07/23/02	13:10:18	23.490
07/23/02	13:11:18	22.637
07/23/02	13:12:18	20.391
07/23/02	13:13:18	19.111
07/23/02	13:14:18	19.367
07/23/02	13:15:18	16.893
07/23/02	13:16:18	16.324
07/23/02	13:17:18	16.068
07/23/02	13:18:18	13.992
07/23/02	13:19:18	19.680
07/23/02	13:20:18	22.637
07/23/02	13:21:18	37.937
07/23/02	13:22:18	44.734
07/23/02	13:23:18	45.275
07/23/02	13:24:18	45.985
07/23/02	13:25:18	46.753
07/23/02	13:26:18	46.042
07/23/02	13:27:18	43.881
07/23/02	13:28:18	46.185
07/23/02	13:29:18	46.185
07/23/02	13:30:18	42.829
07/23/02	13:31:18	45.929
07/23/02	13:32:18	46.497
07/23/02	13:33:18	45.929
07/23/02	13:34:18	45.673
07/23/02	13:35:18	44.848
07/23/02	13:36:18	44.592
07/23/02	13:37:18	44.393
07/23/02	13:38:18	44.023
07/23/02	13:39:18	43.255
07/23/02	13:40:18	42.061
07/23/02	13:41:18	42.743
07/23/02	13:42:18	43.966
07/23/02	13:43:18	54.375
07/23/02	13:44:18	46.156
07/23/02	13:45:18	47.066
07/23/02	13:46:18	47.550
07/23/02	13:47:18	45.360
07/23/02	13:48:18	42.317
07/23/02	13:49:18	45.474
07/23/02	13:50:18	44.165
07/23/02	13:51:18	44.535
07/23/02	13:52:18	48.630
07/23/02	13:53:18	46.810
07/23/02	13:54:18	46.298
07/23/02	13:55:18	44.592
07/23/02	13:56:18	46.497
07/23/02	13:57:18	44.706
07/23/02	13:58:18	46.810
07/23/02	13:59:18	45.417
07/23/02	14:00:18	44.222
07/23/02	14:01:18	46.042
07/23/02	14:02:18	43.710
07/23/02	14:03:18	47.237
07/23/02	14:04:18	44.706
07/23/02	14:05:18	45.730
07/23/02	14:06:18	48.204
07/23/02	14:07:18	44.905
07/23/02	14:08:18	46.554
07/23/02	14:09:18	47.123
07/23/02	14:10:18	47.493
07/23/02	14:11:18	47.322
07/23/02	14:12:18	44.905
07/23/02	14:13:18	48.147
07/23/02	14:14:18	46.554
07/23/02	14:15:18	46.611
07/23/02	14:16:18	45.360
07/23/02	14:17:18	46.497
07/23/02	14:18:18	45.929
07/23/02	14:19:18	48.062
07/23/02	14:20:18	48.716
07/23/02	14:21:18	47.578
07/23/02	14:22:18	47.550
07/23/02	14:23:18	45.303
07/23/02	14:24:18	47.806
07/23/02	14:25:18	46.611
07/23/02	14:26:18	46.867
07/23/02	14:27:18	47.066
07/23/02	14:28:18	47.806
07/23/02	14:29:18	47.009
07/23/02	14:30:18	47.009
07/23/02	14:31:18	46.611
07/23/02	14:32:18	47.066
07/23/02	14:33:18	46.611
07/23/02	14:34:18	47.862
07/23/02	14:35:18	46.156
07/23/02	14:36:18	45.985
07/23/02	14:37:18	44.649
07/23/02	14:38:18	47.322
07/23/02	14:39:18	47.550
07/23/02	14:40:18	47.692
07/23/02	14:41:18	47.749
07/23/02	14:42:18	48.573
07/23/02	14:43:18	46.867
07/23/02	14:44:18	16.381
07/23/02	14:45:18	30.230
07/23/02	14:46:18	29.548
07/23/02	14:47:18	46.554
07/23/02	14:48:18	46.185
07/23/02	14:49:18	45.019
07/23/02	14:50:18	45.872
07/23/02	14:51:18	46.241
07/23/02	14:52:18	46.440
07/23/02	14:53:18	43.909
07/23/02	14:54:18	44.905
07/23/02	14:55:18	45.786
07/23/02	14:56:18	45.104
07/23/02	14:57:18	47.493
07/23/02	14:58:18	46.810
07/23/02	14:59:18	45.019
07/23/02	15:00:18	45.786
07/23/02	15:01:18	46.241

LAGO VISTA AND CRYSTAL RIVER PKWY. - NO. 7553 cont.

Date	Time	Pres (PSI)	Date	Time	Pres (PSI)	Date	Time	Pres (PSI)	Date	Time	Pres (PSI)
07/23/02	15:02:18	44.450	07/23/02	16:08:18	47.806	07/23/02	17:14:18	48.317	07/23/02	18:20:18	46.981
07/23/02	15:03:18	46.924	07/23/02	16:09:18	49.341	07/23/02	17:15:18	47.749	07/23/02	18:21:18	48.118
07/23/02	15:04:18	45.047	07/23/02	16:10:18	47.749	07/23/02	17:16:18	48.317	07/23/02	18:22:18	45.985
07/23/02	15:05:18	46.241	07/23/02	16:11:18	48.972	07/23/02	17:17:18	48.517	07/23/02	18:23:18	46.185
07/23/02	15:06:18	45.019	07/23/02	16:12:18	46.611	07/23/02	17:18:18	47.436	07/23/02	18:24:18	46.554
07/23/02	15:07:18	44.734	07/23/02	16:13:18	48.886	07/23/02	17:19:18	48.886	07/23/02	18:25:18	46.725
07/23/02	15:08:18	46.156	07/23/02	16:14:18	49.825	07/23/02	17:20:18	47.749	07/23/02	18:26:18	47.635
07/23/02	15:09:18	45.929	07/23/02	16:15:18	50.735	07/23/02	17:21:18	49.256	07/23/02	18:27:18	48.317
07/23/02	15:10:18	45.673	07/23/02	16:16:18	47.749	07/23/02	17:22:18	43.710	07/23/02	18:28:18	47.862
07/23/02	15:11:18	46.497	07/23/02	16:17:18	48.772	07/23/02	17:23:18	50.991	07/23/02	18:29:18	48.772
07/23/02	15:12:18	46.241	07/23/02	16:18:18	48.431	07/23/02	17:24:18	49.398	07/23/02	18:30:18	47.862
07/23/02	15:13:18	44.962	07/23/02	16:19:18	50.393	07/23/02	17:25:18	49.540	07/23/02	18:31:18	45.019
07/23/02	15:14:18	45.303	07/23/02	16:20:18	49.540	07/23/02	17:26:18	47.550	07/23/02	18:32:18	48.317
07/23/02	15:15:18	45.843	07/23/02	16:21:18	48.431	07/23/02	17:27:18	47.294	07/23/02	18:33:18	48.317
07/23/02	15:16:18	45.417	07/23/02	16:22:18	49.825	07/23/02	17:28:18	47.635	07/23/02	18:34:18	47.379
07/23/02	15:17:18	46.981	07/23/02	16:23:18	34.866	07/23/02	17:29:18	45.616	07/23/02	18:35:18	45.616
07/23/02	15:18:18	48.517	07/23/02	16:24:18	58.044	07/23/02	17:30:18	48.943	07/23/02	18:36:18	49.028
07/23/02	15:19:18	52.356	07/23/02	16:25:18	50.337	07/23/02	17:31:18	47.635	07/23/02	18:37:18	47.578
07/23/02	15:20:18	47.123	07/23/02	16:26:18	49.654	07/23/02	17:32:18	46.355	07/23/02	18:38:18	49.085
07/23/02	15:21:18	47.862	07/23/02	16:27:18	48.886	07/23/02	17:33:18	48.317	07/23/02	18:39:18	46.668
07/23/02	15:22:18	48.886	07/23/02	16:28:18	48.062	07/23/02	17:34:18	46.725	07/23/02	18:40:18	48.147
07/23/02	15:23:18	50.991	07/23/02	16:29:18	50.593	07/23/02	17:35:18	47.436	07/23/02	18:41:18	47.237
07/23/02	15:24:18	50.081	07/23/02	16:30:18	49.256	07/23/02	17:36:18	47.237	07/23/02	18:42:18	47.123
07/23/02	15:25:18	49.398	07/23/02	16:31:18	49.199	07/23/02	17:37:18	49.711	07/23/02	18:43:18	49.455
07/23/02	15:26:18	50.337	07/23/02	16:32:18	49.199	07/23/02	17:38:18	48.005	07/23/02	18:44:18	48.147
07/23/02	15:27:18	50.223	07/23/02	16:33:18	50.024	07/23/02	17:39:18	47.294	07/23/02	18:45:18	48.886
07/23/02	15:28:18	51.417	07/23/02	16:34:18	49.540	07/23/02	17:40:18	48.062	07/23/02	18:46:18	47.692
07/23/02	15:29:18	49.142	07/23/02	16:35:18	50.792	07/23/02	17:41:18	46.753	07/23/02	18:47:18	47.692
07/23/02	15:30:18	50.536	07/23/02	16:36:18	48.943	07/23/02	17:42:18	48.886	07/23/02	18:48:18	49.455
07/23/02	15:31:18	50.649	07/23/02	16:37:18	49.853	07/23/02	17:43:18	47.493	07/23/02	18:49:18	47.180
07/23/02	15:32:18	50.735	07/23/02	16:38:18	47.635	07/23/02	17:44:18	47.948	07/23/02	18:50:18	49.085
07/23/02	15:33:18	49.540	07/23/02	16:39:18	50.024	07/23/02	17:45:18	49.910	07/23/02	18:51:18	46.753
07/23/02	15:34:18	49.512	07/23/02	16:40:18	46.753	07/23/02	17:46:18	48.972	07/23/02	18:52:18	48.630
07/23/02	15:35:18	49.853	07/23/02	16:41:18	23.149	07/23/02	17:47:18	48.147	07/23/02	18:53:18	47.493
07/23/02	15:36:18	45.985	07/23/02	16:42:18	29.491	07/23/02	17:48:18	49.398	07/23/02	18:54:18	48.005
07/23/02	15:37:18	49.455	07/23/02	16:43:18	32.193	07/23/02	17:49:18	48.972	07/23/02	18:55:18	48.204
07/23/02	15:38:18	50.393	07/23/02	16:44:18	33.074	07/23/02	17:50:18	47.237	07/23/02	18:56:18	47.123
07/23/02	15:39:18	50.109	07/23/02	16:45:18	32.250	07/23/02	17:51:18	47.550	07/23/02	18:57:18	47.578
07/23/02	15:40:18	47.862	07/23/02	16:46:18	32.250	07/23/02	17:52:18	49.028	07/23/02	18:58:18	48.062
07/23/02	15:41:18	48.687	07/23/02	16:47:18	47.862	07/23/02	17:53:18	48.317	07/23/02	18:59:18	47.009
07/23/02	15:42:18	49.256	07/23/02	16:48:18	50.792	07/23/02	17:54:18	46.185	07/23/02	19:00:18	47.294
07/23/02	15:43:18	50.280	07/23/02	16:49:18	45.929	07/23/02	17:55:18	47.578	07/23/02	19:01:18	47.493
07/23/02	15:44:18	51.929	07/23/02	16:50:18	47.009	07/23/02	17:56:18	48.374	07/23/02	19:02:18	48.687
07/23/02	15:45:18	50.962	07/23/02	16:51:18	45.616	07/23/02	17:57:18	46.668	07/23/02	19:03:18	47.436
07/23/02	15:46:18	50.166	07/23/02	16:52:18	49.028	07/23/02	17:58:18	48.062	07/23/02	19:04:18	47.578
07/23/02	15:47:18	48.460	07/23/02	16:53:18	45.843	07/23/02	17:59:18	48.204	07/23/02	19:05:18	49.398
07/23/02	15:48:18	52.498	07/23/02	16:54:18	46.298	07/23/02	18:00:18	48.829	07/23/02	19:06:18	48.005
07/23/02	15:49:18	50.422	07/23/02	16:55:18	44.592	07/23/02	18:01:18	48.716	07/23/02	19:07:18	47.493
07/23/02	15:50:18	51.474	07/23/02	16:56:18	46.099	07/23/02	18:02:18	46.867	07/23/02	19:08:18	47.550
07/23/02	15:51:18	50.593	07/23/02	16:57:18	47.578	07/23/02	18:03:18	47.862	07/23/02	19:09:18	48.204
07/23/02	15:52:18	50.166	07/23/02	16:58:18	47.493	07/23/02	18:04:18	48.886	07/23/02	19:10:18	48.716
07/23/02	15:53:18	50.849	07/23/02	16:59:18	45.786	07/23/02	18:05:18	46.867	07/23/02	19:11:18	49.028
07/23/02	15:54:18	50.223	07/23/02	17:00:18	45.872	07/23/02	18:06:18	46.611	07/23/02	19:12:18	48.630
07/23/02	15:55:18	49.256	07/23/02	17:01:18	47.066	07/23/02	18:07:18	47.948	07/23/02	19:13:18	47.948
07/23/02	15:56:18	48.886	07/23/02	17:02:18	46.981	07/23/02	18:08:18	48.005	07/23/02	19:14:18	47.948
07/23/02	15:57:18	49.398	07/23/02	17:03:18	46.440	07/23/02	18:09:18	48.118	07/23/02	19:15:18	46.924
07/23/02	15:58:18	50.024	07/23/02	17:04:18	46.241	07/23/02	18:10:18	46.156	07/23/02	19:16:18	47.237
07/23/02	15:59:18	49.853	07/23/02	17:05:18	46.725	07/23/02	18:11:18	47.550	07/23/02	19:17:18	48.062
07/23/02	16:00:18	47.749	07/23/02	17:06:18	44.023	07/23/02	18:12:18	49.199	07/23/02	19:18:18	49.768
07/23/02	16:01:18	48.460	07/23/02	17:07:18	45.730	07/23/02	18:13:18	46.753	07/23/02	19:19:18	48.972
07/23/02	16:02:18	48.772	07/23/02	17:08:18	46.611	07/23/02	18:14:18	46.099	07/23/02	19:20:18	48.943
07/23/02	16:03:18	48.062	07/23/02	17:09:18	51.559	07/23/02	18:15:18	49.199	07/23/02	19:21:18	48.886
07/23/02	16:04:18	49.284	07/23/02	17:10:18	48.261	07/23/02	18:16:18	49.142	07/23/02	19:22:18	47.294
07/23/02	16:05:18	49.398	07/23/02	17:11:18	49.398	07/23/02	18:17:18	44.734	07/23/02	19:23:18	47.862
07/23/02	16:06:18	48.630	07/23/02	17:12:18	47.493	07/23/02	18:18:18	49.398	07/23/02	19:24:18	46.099
07/23/02	16:07:18	48.687	07/23/02	17:13:18	48.431	07/23/02	18:19:18	48.005	07/23/02	19:25:18	49.597

LAGO VISTA AND CRYSTAL RIVER PKWY. - NO. 7553 cont.

Date	Time	Pres (PSI)
07/23/02	19:26:18	47.294
07/23/02	19:27:18	47.862
07/23/02	19:28:18	48.062
07/23/02	19:29:18	48.943
07/23/02	19:30:18	46.412
07/23/02	19:31:18	49.341
07/23/02	19:32:18	48.431
07/23/02	19:33:18	46.867
07/23/02	19:34:18	46.611
07/23/02	19:35:18	48.062
07/23/02	19:36:18	46.867
07/23/02	19:37:18	47.322
07/23/02	19:38:18	48.118
07/23/02	19:39:18	46.611
07/23/02	19:40:18	47.180
07/23/02	19:41:18	47.379
07/23/02	19:42:18	47.578
07/23/02	19:43:18	47.635
07/23/02	19:44:18	48.374
07/23/02	19:45:18	48.886
07/23/02	19:46:18	47.379
07/23/02	19:47:18	45.786
07/23/02	19:48:18	46.554
07/23/02	19:49:18	48.630
07/23/02	19:50:18	46.810
07/23/02	19:51:18	48.943
07/23/02	19:52:18	46.725
07/23/02	19:53:18	47.379
07/23/02	19:54:18	47.692
07/23/02	19:55:18	47.862
07/23/02	19:56:18	48.630
07/23/02	19:57:18	47.891
07/23/02	19:58:18	47.180
07/23/02	19:59:18	47.692
07/23/02	20:00:18	47.123
07/23/02	20:01:18	48.829
07/23/02	20:02:18	47.066
07/23/02	20:03:18	48.972
07/23/02	20:04:18	49.028
07/23/02	20:05:18	46.412
07/23/02	20:06:18	49.199
07/23/02	20:07:18	45.872
07/23/02	20:08:18	48.687
07/23/02	20:09:18	47.948
07/23/02	20:10:18	48.687
07/23/02	20:11:18	46.185
07/23/02	20:12:18	45.872
07/23/02	20:13:18	46.440
07/23/02	20:14:18	46.611
07/23/02	20:15:18	47.635
07/23/02	20:16:18	46.412
07/23/02	20:17:18	46.185
07/23/02	20:18:18	46.497
07/23/02	20:19:18	47.379
07/23/02	20:20:18	48.374
07/23/02	20:21:18	46.241
07/23/02	20:22:18	46.412
07/23/02	20:23:18	45.417
07/23/02	20:24:18	47.749
07/23/02	20:25:18	46.241
07/23/02	20:26:18	47.237
07/23/02	20:27:18	47.009
07/23/02	20:28:18	47.692
07/23/02	20:29:18	48.630
07/23/02	20:30:18	47.749
07/23/02	20:31:18	46.924
07/23/02	20:32:18	46.725
07/23/02	20:33:18	46.753
07/23/02	20:34:18	47.322
07/23/02	20:35:18	46.298
07/23/02	20:36:18	48.118
07/23/02	20:37:18	47.862
07/23/02	20:38:18	48.374
07/23/02	20:39:18	49.341
07/23/02	20:40:18	47.436
07/23/02	20:41:18	47.493
07/23/02	20:42:18	48.118
07/23/02	20:43:18	48.460
07/23/02	20:44:18	48.374
07/23/02	20:45:18	46.241
07/23/02	20:46:18	48.317
07/23/02	20:47:18	49.284
07/23/02	20:48:18	47.066
07/23/02	20:49:18	48.317
07/23/02	20:50:18	46.298
07/23/02	20:51:18	47.237
07/23/02	20:52:18	47.578
07/23/02	20:53:18	48.943
07/23/02	20:54:18	47.379
07/23/02	20:55:18	48.716
07/23/02	20:56:18	48.772
07/23/02	20:57:18	47.123
07/23/02	20:58:18	47.322
07/23/02	20:59:18	45.417
07/23/02	21:00:18	46.440
07/23/02	21:01:18	45.161
07/23/02	21:02:18	46.440
07/23/02	21:03:18	47.066
07/23/02	21:04:18	45.275
07/23/02	21:05:18	45.929
07/23/02	21:06:18	46.440
07/23/02	21:07:18	47.493
07/23/02	21:08:18	46.440
07/23/02	21:09:18	46.753
07/23/02	21:10:18	45.530
07/23/02	21:11:18	47.123
07/23/02	21:12:18	45.218
07/23/02	21:13:18	46.497
07/23/02	21:14:18	45.047
07/23/02	21:15:18	46.611
07/23/02	21:16:18	45.730
07/23/02	21:17:18	45.530
07/23/02	21:18:18	45.303
07/23/02	21:19:18	46.554
07/23/02	21:20:18	46.611
07/23/02	21:21:18	47.493
07/23/02	21:22:18	47.237
07/23/02	21:23:18	45.985
07/23/02	21:24:18	46.156
07/23/02	21:25:18	46.241
07/23/02	21:26:18	46.497
07/23/02	21:27:18	46.867
07/23/02	21:28:18	47.436
07/23/02	21:29:18	47.436
07/23/02	21:30:18	47.891
07/23/02	21:31:18	47.635
07/23/02	21:32:18	47.436
07/23/02	21:33:18	46.497
07/23/02	21:34:18	46.668
07/23/02	21:35:18	46.440
07/23/02	21:36:18	48.062
07/23/02	21:37:18	46.668
07/23/02	21:38:18	47.493
07/23/02	21:39:18	47.180
07/23/02	21:40:18	46.668
07/23/02	21:41:18	46.668
07/23/02	21:42:18	47.749
07/23/02	21:43:18	47.635
07/23/02	21:44:18	47.009
07/23/02	21:45:18	47.948
07/23/02	21:46:18	44.478
07/23/02	21:47:18	30.572
07/23/02	21:48:18	28.780
07/23/02	21:49:18	27.273
07/23/02	21:50:18	27.586
07/23/02	21:51:18	27.642
07/23/02	21:52:18	26.960
07/23/02	21:53:18	27.330
07/23/02	21:54:18	25.766
07/23/02	21:55:18	26.391
07/23/02	21:56:18	25.993
07/23/02	21:57:18	37.937
07/23/02	21:58:18	44.592
07/23/02	21:59:18	43.653
07/23/02	22:00:18	44.023
07/23/02	22:01:18	45.104
07/23/02	22:02:18	44.165
07/23/02	22:03:18	44.080
07/23/02	22:04:18	42.687
07/23/02	22:05:18	44.336
07/23/02	22:06:18	44.023
07/23/02	22:07:18	43.597
07/23/02	22:08:18	44.706
07/23/02	22:09:18	45.019
07/23/02	22:10:18	46.725
07/23/02	22:11:18	44.734
07/23/02	22:12:18	43.966
07/23/02	22:13:18	44.535
07/23/02	22:14:18	44.023
07/23/02	22:15:18	45.360
07/23/02	22:16:18	45.530
07/23/02	22:17:18	44.649
07/23/02	22:18:18	44.450
07/23/02	22:19:18	55.598
07/23/02	22:20:18	45.843
07/23/02	22:21:18	48.118
07/23/02	22:22:18	48.517
07/23/02	22:23:18	47.948
07/23/02	22:24:18	48.829
07/23/02	22:25:18	48.374
07/23/02	22:26:18	47.862
07/23/02	22:27:18	47.237
07/23/02	22:28:18	47.749
07/23/02	22:29:18	48.118
07/23/02	22:30:18	48.005
07/23/02	22:31:18	49.284
07/23/02	22:32:18	48.005
07/23/02	22:33:18	48.005
07/23/02	22:34:18	48.943
07/23/02	22:35:18	48.118
07/23/02	22:36:18	49.654
07/23/02	22:37:18	49.512
07/23/02	22:38:18	47.436
07/23/02	22:39:18	49.199
07/23/02	22:40:18	48.204
07/23/02	22:41:18	48.829
07/23/02	22:42:18	49.853
07/23/02	22:43:18	49.028
07/23/02	22:44:18	49.540
07/23/02	22:45:18	50.280
07/23/02	22:46:18	47.749
07/23/02	22:47:18	49.967
07/23/02	22:48:18	48.943
07/23/02	22:49:18	50.792
07/23/02	22:50:18	50.393
07/23/02	22:51:18	49.028
07/23/02	22:52:18	50.593
07/23/02	22:53:18	49.825
07/23/02	22:54:18	49.455
07/23/02	22:55:18	49.967
07/23/02	22:56:18	50.109
07/23/02	22:57:18	49.711
07/23/02	22:58:18	49.341
07/23/02	22:59:18	49.256
07/23/02	23:00:18	50.109
07/23/02	23:01:18	49.199
07/23/02	23:02:18	49.256
07/23/02	23:03:18	48.716
07/23/02	23:04:18	49.654
07/23/02	23:05:18	49.284
07/23/02	23:06:18	48.573
07/23/02	23:07:18	48.261
07/23/02	23:08:18	50.422
07/23/02	23:09:18	50.479
07/23/02	23:10:18	49.768
07/23/02	23:11:18	50.849
07/23/02	23:12:18	50.223
07/23/02	23:13:18	51.304
07/23/02	23:14:18	50.166
07/23/02	23:15:18	51.474
07/23/02	23:16:18	49.910
07/23/02	23:17:18	50.337
07/23/02	23:18:18	51.218
07/23/02	23:19:18	50.280
07/23/02	23:20:18	49.540
07/23/02	23:21:18	49.853
07/23/02	23:22:18	49.768
07/23/02	23:23:18	50.991
07/23/02	23:24:18	51.161
07/23/02	23:25:18	50.678
07/23/02	23:26:18	50.991
07/23/02	23:27:18	51.304
07/23/02	23:28:18	50.735
07/23/02	23:29:18	50.536
07/23/02	23:30:18	49.853
07/23/02	23:31:18	50.337
07/23/02	23:32:18	50.166
07/23/02	23:33:18	50.280
07/23/02	23:34:18	50.735
07/23/02	23:35:18	50.280
07/23/02	23:36:18	51.304
07/23/02	23:37:18	51.929
07/23/02	23:38:18	51.417
07/23/02	23:39:18	52.043
07/23/02	23:40:18	50.593
07/23/02	23:41:18	51.559
07/23/02	23:42:18	52.356
07/23/02	23:43:18	51.304
07/23/02	23:44:18	51.559
07/23/02	23:45:18	52.242
07/23/02	23:46:18	51.304
07/23/02	23:47:18	51.815
07/23/02	23:48:18	52.811
07/23/02	23:49:18	50.792

LAGO VISTA AND CRYSTAL RIVER PKWY. - NO. 7553 cont.

Date	Time	Pres (PSI)	Date	Time	Pres (PSI)	Date	Time	Pres (PSI)	Date	Time	Pres (PSI)
07/23/02	23:50:18	52.384	07/24/02	00:56:18	53.522	07/24/02	02:02:18	54.631	07/24/02	03:08:18	53.067
07/23/02	23:51:18	50.735	07/24/02	00:57:18	54.773	07/24/02	02:03:18	52.953	07/24/02	03:09:18	56.366
07/23/02	23:52:18	52.811	07/24/02	00:58:18	53.237	07/24/02	02:04:18	54.062	07/24/02	03:10:18	53.835
07/23/02	23:53:18	52.868	07/24/02	00:59:18	54.204	07/24/02	02:05:18	53.948	07/24/02	03:11:18	54.403
07/23/02	23:54:18	52.612	07/24/02	01:00:18	52.498	07/24/02	02:06:18	53.749	07/24/02	03:12:18	53.010
07/23/02	23:55:18	53.692	07/24/02	01:01:18	53.266	07/24/02	02:07:18	53.380	07/24/02	03:13:18	54.261
07/23/02	23:56:18	51.304	07/24/02	01:02:18	53.692	07/24/02	02:08:18	53.891	07/24/02	03:14:18	53.522
07/23/02	23:57:18	52.299	07/24/02	01:03:18	53.436	07/24/02	02:09:18	52.811	07/24/02	03:15:18	53.237
07/23/02	23:58:18	52.185	07/24/02	01:04:18	53.891	07/24/02	02:10:18	53.010	07/24/02	03:16:18	53.124
07/23/02	23:59:18	52.498	07/24/02	01:05:18	53.266	07/24/02	02:11:18	53.237	07/24/02	03:17:18	52.811
07/24/02	00:00:18	52.669	07/24/02	01:06:18	52.754	07/24/02	02:12:18	52.612	07/24/02	03:18:18	53.067
07/24/02	00:01:18	50.479	07/24/02	01:07:18	53.891	07/24/02	02:13:18	53.380	07/24/02	03:19:18	51.787
07/24/02	00:02:18	53.493	07/24/02	01:08:18	52.299	07/24/02	02:14:18	52.953	07/24/02	03:20:18	54.005
07/24/02	00:03:18	53.436	07/24/02	01:09:18	53.180	07/24/02	02:15:18	40.042	07/24/02	03:21:18	52.953
07/24/02	00:04:18	52.868	07/24/02	01:10:18	53.380	07/24/02	02:16:18	40.867	07/24/02	03:22:18	52.953
07/24/02	00:05:18	53.180	07/24/02	01:11:18	53.806	07/24/02	02:17:18	44.165	07/24/02	03:23:18	53.380
07/24/02	00:06:18	51.787	07/24/02	01:12:18	52.953	07/24/02	02:18:18	44.592	07/24/02	03:24:18	52.697
07/24/02	00:07:18	52.384	07/24/02	01:13:18	53.124	07/24/02	02:19:18	44.734	07/24/02	03:25:18	53.579
07/24/02	00:08:18	52.100	07/24/02	01:14:18	28.097	07/24/02	02:20:18	45.019	07/24/02	03:26:18	52.953
07/24/02	00:09:18	52.754	07/24/02	01:15:18	42.630	07/24/02	02:21:18	44.222	07/24/02	03:27:18	52.953
07/24/02	00:10:18	53.522	07/24/02	01:16:18	42.061	07/24/02	02:22:18	45.275	07/24/02	03:28:18	53.010
07/24/02	00:11:18	52.555	07/24/02	01:17:18	55.712	07/24/02	02:23:18	45.218	07/24/02	03:29:18	54.147
07/24/02	00:12:18	52.299	07/24/02	01:18:18	53.436	07/24/02	02:24:18	44.393	07/24/02	03:30:18	53.493
07/24/02	00:13:18	53.124	07/24/02	01:19:18	52.299	07/24/02	02:25:18	44.165	07/24/02	03:31:18	53.806
07/24/02	00:14:18	52.299	07/24/02	01:20:18	54.261	07/24/02	02:26:18	57.247	07/24/02	03:32:18	53.806
07/24/02	00:15:18	52.868	07/24/02	01:21:18	52.185	07/24/02	02:27:18	55.086	07/24/02	03:33:18	53.237
07/24/02	00:16:18	52.754	07/24/02	01:22:18	53.493	07/24/02	02:28:18	51.730	07/24/02	03:34:18	53.835
07/24/02	00:17:18	52.441	07/24/02	01:23:18	53.180	07/24/02	02:29:18	54.517	07/24/02	03:35:18	53.948
07/24/02	00:18:18	53.948	07/24/02	01:24:18	52.868	07/24/02	02:30:18	52.697	07/24/02	03:36:18	53.380
07/24/02	00:19:18	52.953	07/24/02	01:25:18	52.384	07/24/02	02:31:18	53.380	07/24/02	03:37:18	53.806
07/24/02	00:20:18	53.579	07/24/02	01:26:18	53.948	07/24/02	02:32:18	52.868	07/24/02	03:38:18	53.692
07/24/02	00:21:18	52.953	07/24/02	01:27:18	53.266	07/24/02	02:33:18	52.953	07/24/02	03:39:18	53.806
07/24/02	00:22:18	52.612	07/24/02	01:28:18	53.010	07/24/02	02:34:18	53.010	07/24/02	03:40:18	53.835
07/24/02	00:23:18	53.237	07/24/02	01:29:18	53.266	07/24/02	02:35:18	52.925	07/24/02	03:41:18	54.261
07/24/02	00:24:18	52.356	07/24/02	01:30:18	52.925	07/24/02	02:36:18	53.124	07/24/02	03:42:18	53.636
07/24/02	00:25:18	53.806	07/24/02	01:31:18	50.905	07/24/02	02:37:18	53.266	07/24/02	03:43:18	54.147
07/24/02	00:26:18	53.323	07/24/02	01:32:18	52.384	07/24/02	02:38:18	52.697	07/24/02	03:44:18	54.005
07/24/02	00:27:18	53.067	07/24/02	01:33:18	52.242	07/24/02	02:39:18	52.498	07/24/02	03:45:18	53.266
07/24/02	00:28:18	53.493	07/24/02	01:34:18	51.929	07/24/02	02:40:18	53.067	07/24/02	03:46:18	52.242
07/24/02	00:29:18	53.636	07/24/02	01:35:18	53.493	07/24/02	02:41:18	53.380	07/24/02	03:47:18	54.574
07/24/02	00:30:18	53.436	07/24/02	01:36:18	52.498	07/24/02	02:42:18	53.579	07/24/02	03:48:18	53.891
07/24/02	00:31:18	54.375	07/24/02	01:37:18	51.986	07/24/02	02:43:18	53.124	07/24/02	03:49:18	53.266
07/24/02	00:32:18	54.460	07/24/02	01:38:18	53.266	07/24/02	02:44:18	52.953	07/24/02	03:50:18	53.124
07/24/02	00:33:18	54.091	07/24/02	01:39:18	52.441	07/24/02	02:45:18	53.237	07/24/02	03:51:18	53.493
07/24/02	00:34:18	53.522	07/24/02	01:40:18	52.441	07/24/02	02:46:18	53.835	07/24/02	03:52:18	53.579
07/24/02	00:35:18	54.005	07/24/02	01:41:18	53.010	07/24/02	02:47:18	53.067	07/24/02	03:53:18	53.522
07/24/02	00:36:18	53.010	07/24/02	01:42:18	52.811	07/24/02	02:48:18	53.522	07/24/02	03:54:18	34.866
07/24/02	00:37:18	53.835	07/24/02	01:43:18	52.441	07/24/02	02:49:18	52.498	07/24/02	03:55:18	42.772
07/24/02	00:38:18	53.380	07/24/02	01:44:18	52.185	07/24/02	02:50:18	52.697	07/24/02	03:56:18	43.198
07/24/02	00:39:18	53.323	07/24/02	01:45:18	53.266	07/24/02	02:51:18	52.612	07/24/02	03:57:18	56.223
07/24/02	00:40:18	53.493	07/24/02	01:46:18	52.953	07/24/02	02:52:18	51.986	07/24/02	03:58:18	52.043
07/24/02	00:41:18	53.493	07/24/02	01:47:18	51.815	07/24/02	02:53:18	52.185	07/24/02	03:59:18	50.678
07/24/02	00:42:18	54.318	07/24/02	01:48:18	53.380	07/24/02	02:54:18	52.612	07/24/02	04:00:18	51.815
07/24/02	00:43:18	54.062	07/24/02	01:49:18	52.100	07/24/02	02:55:18	52.754	07/24/02	04:01:18	50.678
07/24/02	00:44:18	54.147	07/24/02	01:50:18	52.754	07/24/02	02:56:18	52.242	07/24/02	04:02:18	50.735
07/24/02	00:45:18	54.659	07/24/02	01:51:18	52.555	07/24/02	02:57:18	52.043	07/24/02	04:03:18	51.161
07/24/02	00:46:18	53.323	07/24/02	01:52:18	52.868	07/24/02	02:58:18	53.124	07/24/02	04:04:18	50.905
07/24/02	00:47:18	53.948	07/24/02	01:53:18	53.380	07/24/02	02:59:18	53.579	07/24/02	04:05:18	49.711
07/24/02	00:48:18	55.143	07/24/02	01:54:18	53.522	07/24/02	03:00:18	53.180	07/24/02	04:06:18	50.393
07/24/02	00:49:18	54.062	07/24/02	01:55:18	53.323	07/24/02	03:01:18	52.811	07/24/02	04:07:18	50.792
07/24/02	00:50:18	54.091	07/24/02	01:56:18	52.669	07/24/02	03:02:18	54.318	07/24/02	04:08:18	50.991
07/24/02	00:51:18	54.659	07/24/02	01:57:18	52.953	07/24/02	03:03:18	53.948	07/24/02	04:09:18	50.678
07/24/02	00:52:18	54.318	07/24/02	01:58:18	53.380	07/24/02	03:04:18	53.835	07/24/02	04:10:18	50.678
07/24/02	00:53:18	54.005	07/24/02	01:59:18	53.067	07/24/02	03:05:18	53.636	07/24/02	04:11:18	50.792
07/24/02	00:54:18	53.835	07/24/02	02:00:18	55.598	07/24/02	03:06:18	53.806	07/24/02	04:12:18	50.678
07/24/02	00:55:18	53.436	07/24/02	02:01:18	53.806	07/24/02	03:07:18	53.323	07/24/02	04:13:18	51.986

LAGO VISTA AND CRYSTAL RIVER PKWY. - NO. 7553 cont.

Date	Time	Pres (PSI)
07/24/02	04:14:18	50.109
07/24/02	04:15:18	50.593
07/24/02	04:16:18	50.280
07/24/02	04:17:18	50.422
07/24/02	04:18:18	50.536
07/24/02	04:19:18	50.991
07/24/02	04:20:18	51.161
07/24/02	04:21:18	50.393
07/24/02	04:22:18	50.849
07/24/02	04:23:18	51.360
07/24/02	04:24:18	51.048
07/24/02	04:25:18	50.593
07/24/02	04:26:18	50.962
07/24/02	04:27:18	50.849
07/24/02	04:28:18	50.024
07/24/02	04:29:18	50.166
07/24/02	04:30:18	50.109
07/24/02	04:31:18	47.891
07/24/02	04:32:18	50.905
07/24/02	04:33:18	50.536
07/24/02	04:34:18	51.929
07/24/02	04:35:18	51.218
07/24/02	04:36:18	51.304
07/24/02	04:37:18	51.815
07/24/02	04:38:18	52.925
07/24/02	04:39:18	51.474
07/24/02	04:40:18	51.787
07/24/02	04:41:18	52.299
07/24/02	04:42:18	51.559
07/24/02	04:43:18	51.531
07/24/02	04:44:18	51.673
07/24/02	04:45:18	52.043
07/24/02	04:46:18	51.531
07/24/02	04:47:18	50.991
07/24/02	04:48:18	51.673
07/24/02	04:49:18	51.986
07/24/02	04:50:18	51.161
07/24/02	04:51:18	51.304
07/24/02	04:52:18	50.792
07/24/02	04:53:18	51.304
07/24/02	04:54:18	52.669
07/24/02	04:55:18	51.815
07/24/02	04:56:18	51.531
07/24/02	04:57:18	51.048
07/24/02	04:58:18	50.536
07/24/02	04:59:18	50.479
07/24/02	05:00:18	47.493
07/24/02	05:01:18	49.825
07/24/02	05:02:18	47.806
07/24/02	05:03:18	48.517
07/24/02	05:04:18	48.716
07/24/02	05:05:18	47.180
07/24/02	05:06:18	47.862
07/24/02	05:07:18	49.597
07/24/02	05:08:18	49.142
07/24/02	05:09:18	48.943
07/24/02	05:10:18	48.062
07/24/02	05:11:18	49.142
07/24/02	05:12:18	49.597
07/24/02	05:13:18	49.085
07/24/02	05:14:18	49.398
07/24/02	05:15:18	49.853
07/24/02	05:16:18	49.853
07/24/02	05:17:18	52.868
07/24/02	05:18:18	50.593
07/24/02	05:19:18	50.905
07/24/02	05:20:18	54.403
07/24/02	05:21:18	51.872
07/24/02	05:22:18	53.579
07/24/02	05:23:18	52.612
07/24/02	05:24:18	52.555
07/24/02	05:25:18	52.754
07/24/02	05:26:18	52.697
07/24/02	05:27:18	53.010
07/24/02	05:28:18	52.697
07/24/02	05:29:18	53.380
07/24/02	05:30:18	52.043
07/24/02	05:31:18	52.811
07/24/02	05:32:18	50.678
07/24/02	05:33:18	53.436
07/24/02	05:34:18	52.612
07/24/02	05:35:18	52.697
07/24/02	05:36:18	52.185
07/24/02	05:37:18	52.384
07/24/02	05:38:18	52.384
07/24/02	05:39:18	52.356
07/24/02	05:40:18	52.811
07/24/02	05:41:18	52.043
07/24/02	05:42:18	52.697
07/24/02	05:43:18	52.612
07/24/02	05:44:18	51.787
07/24/02	05:45:18	51.986
07/24/02	05:46:18	51.815
07/24/02	05:47:18	52.043
07/24/02	05:48:18	52.697
07/24/02	05:49:18	53.692
07/24/02	05:50:18	51.730
07/24/02	05:51:18	53.579
07/24/02	05:52:18	52.925
07/24/02	05:53:18	53.010
07/24/02	05:54:18	52.299
07/24/02	05:55:18	49.654
07/24/02	05:56:18	52.043
07/24/02	05:57:18	50.991
07/24/02	05:58:18	47.948
07/24/02	05:59:18	50.081
07/24/02	06:00:18	51.730
07/24/02	06:01:18	50.991
07/24/02	06:02:18	50.792
07/24/02	06:03:18	51.616
07/24/02	06:04:18	50.649
07/24/02	06:05:18	50.223
07/24/02	06:06:18	50.593
07/24/02	06:07:18	50.735
07/24/02	06:08:18	50.337
07/24/02	06:09:18	50.536
07/24/02	06:10:18	51.986
07/24/02	06:11:18	49.654
07/24/02	06:12:18	50.792
07/24/02	06:13:18	50.280
07/24/02	06:14:18	51.304
07/24/02	06:15:18	49.711
07/24/02	06:16:18	51.048
07/24/02	06:17:18	51.360
07/24/02	06:18:18	51.048
07/24/02	06:19:18	50.337
07/24/02	06:20:18	51.247
07/24/02	06:21:18	49.853
07/24/02	06:22:18	51.730
07/24/02	06:23:18	50.905
07/24/02	06:24:18	50.792
07/24/02	06:25:18	51.104
07/24/02	06:26:18	50.166
07/24/02	06:27:18	50.593
07/24/02	06:28:18	49.512
07/24/02	06:29:18	50.792
07/24/02	06:30:18	49.654
07/24/02	06:31:18	51.161
07/24/02	06:32:18	50.280
07/24/02	06:33:18	52.498
07/24/02	06:34:18	50.735
07/24/02	06:35:18	48.972
07/24/02	06:36:18	50.678
07/24/02	06:37:18	50.166
07/24/02	06:38:18	49.825
07/24/02	06:39:18	51.474
07/24/02	06:40:18	51.104
07/24/02	06:41:18	49.341
07/24/02	06:42:18	50.422
07/24/02	06:43:18	50.024
07/24/02	06:44:18	52.043
07/24/02	06:45:18	52.697
07/24/02	06:46:18	49.256
07/24/02	06:47:18	51.673
07/24/02	06:48:18	50.479
07/24/02	06:49:18	50.422
07/24/02	06:50:18	48.573
07/24/02	06:51:18	50.393
07/24/02	06:52:18	50.649
07/24/02	06:53:18	50.735
07/24/02	06:54:18	50.905
07/24/02	06:55:18	53.180
07/24/02	06:56:18	51.304
07/24/02	06:57:18	51.360
07/24/02	06:58:18	49.910
07/24/02	06:59:18	50.081
07/24/02	07:00:18	49.398
07/24/02	07:01:18	49.398
07/24/02	07:02:18	51.104
07/24/02	07:03:18	48.005
07/24/02	07:04:18	50.081
07/24/02	07:05:18	47.578
07/24/02	07:06:18	50.536
07/24/02	07:07:18	50.393
07/24/02	07:08:18	47.891
07/24/02	07:09:18	49.085
07/24/02	07:10:18	49.256
07/24/02	07:11:18	47.635
07/24/02	07:12:18	48.147
07/24/02	07:13:18	47.379
07/24/02	07:14:18	48.716
07/24/02	07:15:18	47.123
07/24/02	07:16:18	46.412
07/24/02	07:17:18	47.237
07/24/02	07:18:18	46.497
07/24/02	07:19:18	48.374
07/24/02	07:20:18	47.550
07/24/02	07:21:18	47.123
07/24/02	07:22:18	47.294
07/24/02	07:23:18	46.924
07/24/02	07:24:18	46.668
07/24/02	07:25:18	48.886
07/24/02	07:26:18	47.322
07/24/02	07:27:18	47.180
07/24/02	07:28:18	47.294
07/24/02	07:29:18	45.843
07/24/02	07:30:18	47.578
07/24/02	07:31:18	48.147
07/24/02	07:32:18	47.379
07/24/02	07:33:18	48.630
07/24/02	07:34:18	48.147
07/24/02	07:35:18	46.611
07/24/02	07:36:18	49.853
07/24/02	07:37:18	49.853
07/24/02	07:38:18	47.749
07/24/02	07:39:18	48.517
07/24/02	07:40:18	50.593
07/24/02	07:41:18	50.280
07/24/02	07:42:18	47.749
07/24/02	07:43:18	49.142
07/24/02	07:44:18	50.337
07/24/02	07:45:18	48.772
07/24/02	07:46:18	49.085
07/24/02	07:47:18	50.109
07/24/02	07:48:18	50.280
07/24/02	07:49:18	49.910
07/24/02	07:50:18	51.304
07/24/02	07:51:18	52.185
07/24/02	07:52:18	50.735
07/24/02	07:53:18	50.422
07/24/02	07:54:18	49.711
07/24/02	07:55:18	49.597
07/24/02	07:56:18	49.256
07/24/02	07:57:18	49.199
07/24/02	07:58:18	51.218
07/24/02	07:59:18	50.905
07/24/02	08:00:18	47.493
07/24/02	08:01:18	46.611
07/24/02	08:02:18	46.981
07/24/02	08:03:18	47.237
07/24/02	08:04:18	51.730
07/24/02	08:05:18	46.497
07/24/02	08:06:18	47.493
07/24/02	08:07:18	48.716
07/24/02	08:08:18	46.753
07/24/02	08:09:18	49.853
07/24/02	08:10:18	48.772
07/24/02	08:11:18	47.009
07/24/02	08:12:18	46.185
07/24/02	08:13:18	50.223
07/24/02	08:14:18	46.440
07/24/02	08:15:18	45.104
07/24/02	08:16:18	44.478
07/24/02	08:17:18	47.123
07/24/02	08:18:18	45.872
07/24/02	08:19:18	48.147
07/24/02	08:20:18	49.341
07/24/02	08:21:18	48.005
07/24/02	08:22:18	20.192
07/24/02	08:23:18	32.449
07/24/02	08:24:18	34.610
07/24/02	08:25:18	32.250
07/24/02	08:26:18	32.335
07/24/02	08:27:18	32.847
07/24/02	08:28:18	49.768
07/24/02	08:29:18	51.787
07/24/02	08:30:18	46.099
07/24/02	08:31:18	46.924
07/24/02	08:32:18	47.635
07/24/02	08:33:18	47.379
07/24/02	08:34:18	47.493
07/24/02	08:35:18	46.355
07/24/02	08:36:18	46.042
07/24/02	08:37:18	45.673

LAGO VISTA AND CRYSTAL RIVER PKWY. - NO. 7553 cont.

Date	Time	Pres (PSI)	Date	Time	Pres (PSI)	Date	Time	Pres (PSI)	Date	Time	Pres (PSI)
07/24/02	08:38:18	44.791	07/24/02	09:44:18	48.374	07/24/02	10:50:18	45.616	07/24/02	11:56:18	48.147
07/24/02	08:39:18	46.156	07/24/02	09:45:18	47.180	07/24/02	10:51:18	48.147	07/24/02	11:57:18	44.962
07/24/02	08:40:18	47.493	07/24/02	09:46:18	46.241	07/24/02	10:52:18	42.630	07/24/02	11:58:18	49.199
07/24/02	08:41:18	47.749	07/24/02	09:47:18	47.180	07/24/02	10:53:18	46.725	07/24/02	11:59:18	46.725
07/24/02	08:42:18	44.791	07/24/02	09:48:18	48.972	07/24/02	10:54:18	42.573	07/24/02	12:00:18	46.355
07/24/02	08:43:18	46.554	07/24/02	09:49:18	48.374	07/24/02	10:55:18	45.019	07/24/02	12:01:18	48.460
07/24/02	08:44:18	46.981	07/24/02	09:50:18	47.578	07/24/02	10:56:18	43.341	07/24/02	12:02:18	47.237
07/24/02	08:45:18	43.966	07/24/02	09:51:18	47.493	07/24/02	10:57:18	48.630	07/24/02	12:03:18	44.535
07/24/02	08:46:18	43.597	07/24/02	09:52:18	48.460	07/24/02	10:58:18	45.474	07/24/02	12:04:18	46.554
07/24/02	08:47:18	45.161	07/24/02	09:53:18	48.118	07/24/02	10:59:18	35.037	07/24/02	12:05:18	46.668
07/24/02	08:48:18	44.535	07/24/02	09:54:18	46.810	07/24/02	11:00:18	15.698	07/24/02	12:06:18	46.241
07/24/02	08:49:18	44.450	07/24/02	09:55:18	48.460	07/24/02	11:01:18	6.797	07/24/02	12:07:18	49.711
07/24/02	08:50:18	43.198	07/24/02	09:56:18	47.550	07/24/02	11:02:18	8.304	07/24/02	12:08:18	47.436
07/24/02	08:51:18	44.222	07/24/02	09:57:18	46.611	07/24/02	11:03:18	7.280	07/24/02	12:09:18	49.825
07/24/02	08:52:18	41.236	07/24/02	09:58:18	47.578	07/24/02	11:04:18	6.967	07/24/02	12:10:18	45.673
07/24/02	08:53:18	41.748	07/24/02	09:59:18	47.578	07/24/02	11:05:18	8.048	07/24/02	12:11:18	46.725
07/24/02	08:54:18	42.999	07/24/02	10:00:18	46.298	07/24/02	11:06:18	8.361	07/24/02	12:12:18	45.161
07/24/02	08:55:18	44.165	07/24/02	10:01:18	46.241	07/24/02	11:07:18	8.418	07/24/02	12:13:18	46.156
07/24/02	08:56:18	43.341	07/24/02	10:02:18	43.653	07/24/02	11:08:18	8.162	07/24/02	12:14:18	45.985
07/24/02	08:57:18	44.848	07/24/02	10:03:18	47.294	07/24/02	11:09:18	6.911	07/24/02	12:15:18	15.755
07/24/02	08:58:18	47.578	07/24/02	10:04:18	40.468	07/24/02	11:10:18	7.934	07/24/02	12:16:18	10.266
07/24/02	08:59:18	45.474	07/24/02	10:05:18	28.581	07/24/02	11:11:18	7.110	07/24/02	12:17:18	26.050
07/24/02	09:00:18	45.019	07/24/02	10:06:18	28.666	07/24/02	11:12:18	6.598	07/24/02	12:18:18	29.719
07/24/02	09:01:18	55.598	07/24/02	10:07:18	28.979	07/24/02	11:13:18	6.200	07/24/02	12:19:18	48.062
07/24/02	09:02:18	48.431	07/24/02	10:08:18	28.922	07/24/02	11:14:18	7.110	07/24/02	12:20:18	52.498
07/24/02	09:03:18	46.725	07/24/02	10:09:18	31.112	07/24/02	11:15:18	5.773	07/24/02	12:21:18	49.284
07/24/02	09:04:18	48.261	07/24/02	10:10:18	31.453	07/24/02	11:16:18	5.517	07/24/02	12:22:18	45.843
07/24/02	09:05:18	48.062	07/24/02	10:11:18	30.884	07/24/02	11:17:18	6.029	07/24/02	12:23:18	46.554
07/24/02	09:06:18	48.062	07/24/02	10:12:18	32.079	07/24/02	11:18:18	6.512	07/24/02	12:24:18	47.436
07/24/02	09:07:18	47.493	07/24/02	10:13:18	30.856	07/24/02	11:19:18	6.598	07/24/02	12:25:18	45.360
07/24/02	09:08:18	48.374	07/24/02	10:14:18	29.747	07/24/02	11:20:18	7.223	07/24/02	12:26:18	45.530
07/24/02	09:09:18	49.142	07/24/02	10:15:18	28.012	07/24/02	11:21:18	11.717	07/24/02	12:27:18	46.185
07/24/02	09:10:18	47.436	07/24/02	10:16:18	28.581	07/24/02	11:22:18	14.191	07/24/02	12:28:18	47.009
07/24/02	09:11:18	48.005	07/24/02	10:17:18	27.699	07/24/02	11:23:18	17.831	07/24/02	12:29:18	45.843
07/24/02	09:12:18	47.891	07/24/02	10:18:18	27.842	07/24/02	11:24:18	20.561	07/24/02	12:30:18	45.530
07/24/02	09:13:18	46.440	07/24/02	10:19:18	26.875	07/24/02	11:25:18	23.206	07/24/02	12:31:18	46.725
07/24/02	09:14:18	49.597	07/24/02	10:20:18	28.097	07/24/02	11:26:18	34.269	07/24/02	12:32:18	45.616
07/24/02	09:15:18	46.867	07/24/02	10:21:18	27.955	07/24/02	11:27:18	38.080	07/24/02	12:33:18	46.611
07/24/02	09:16:18	47.379	07/24/02	10:22:18	37.624	07/24/02	11:28:18	46.355	07/24/02	12:34:18	46.611
07/24/02	09:17:18	48.573	07/24/02	10:23:18	52.498	07/24/02	11:29:18	45.019	07/24/02	12:35:18	46.298
07/24/02	09:18:18	43.597	07/24/02	10:24:18	48.517	07/24/02	11:30:18	45.587	07/24/02	12:36:18	46.554
07/24/02	09:19:18	34.411	07/24/02	10:25:18	48.261	07/24/02	11:31:18	45.616	07/24/02	12:37:18	45.843
07/24/02	09:20:18	36.373	07/24/02	10:26:18	47.123	07/24/02	11:32:18	45.530	07/24/02	12:38:18	45.474
07/24/02	09:21:18	38.222	07/24/02	10:27:18	47.891	07/24/02	11:33:18	46.668	07/24/02	12:39:18	47.009
07/24/02	09:22:18	36.174	07/24/02	10:28:18	46.440	07/24/02	11:34:18	43.767	07/24/02	12:40:18	46.355
07/24/02	09:23:18	37.454	07/24/02	10:29:18	47.635	07/24/02	11:35:18	45.730	07/24/02	12:41:18	46.725
07/24/02	09:24:18	37.767	07/24/02	10:30:18	47.123	07/24/02	11:36:18	45.161	07/24/02	12:42:18	46.497
07/24/02	09:25:18	37.710	07/24/02	10:31:18	48.317	07/24/02	11:37:18	47.635	07/24/02	12:43:18	44.222
07/24/02	09:26:18	36.629	07/24/02	10:32:18	46.753	07/24/02	11:38:18	44.393	07/24/02	12:44:18	46.099
07/24/02	09:27:18	34.866	07/24/02	10:33:18	48.517	07/24/02	11:39:18	47.180	07/24/02	12:45:18	46.412
07/24/02	09:28:18	35.435	07/24/02	10:34:18	47.749	07/24/02	11:40:18	46.298	07/24/02	12:46:18	46.298
07/24/02	09:29:18	36.743	07/24/02	10:35:18	46.753	07/24/02	11:41:18	46.668	07/24/02	12:47:18	45.872
07/24/02	09:30:18	34.724	07/24/02	10:36:18	45.530	07/24/02	11:42:18	47.891	07/24/02	12:48:18	45.929
07/24/02	09:31:18	35.037	07/24/02	10:37:18	47.066	07/24/02	11:43:18	46.810	07/24/02	12:49:18	45.587
07/24/02	09:32:18	36.800	07/24/02	10:38:18	47.806	07/24/02	11:44:18	47.692	07/24/02	12:50:18	46.099
07/24/02	09:33:18	38.136	07/24/02	10:39:18	45.843	07/24/02	11:45:18	46.440	07/24/02	12:51:18	44.393
07/24/02	09:34:18	37.966	07/24/02	10:40:18	46.611	07/24/02	11:46:18	46.810	07/24/02	12:52:18	44.962
07/24/02	09:35:18	37.568	07/24/02	10:41:18	46.725	07/24/02	11:47:18	48.460	07/24/02	12:53:18	45.275
07/24/02	09:36:18	37.369	07/24/02	10:42:18	48.118	07/24/02	11:48:18	47.806	07/24/02	12:54:18	46.042
07/24/02	09:37:18	37.966	07/24/02	10:43:18	47.237	07/24/02	11:49:18	47.237	07/24/02	12:55:18	46.867
07/24/02	09:38:18	38.705	07/24/02	10:44:18	47.749	07/24/02	11:50:18	48.772	07/24/02	12:56:18	46.867
07/24/02	09:39:18	37.710	07/24/02	10:45:18	46.099	07/24/02	11:51:18	48.886	07/24/02	12:57:18	45.587
07/24/02	09:40:18	38.506	07/24/02	10:46:18	46.753	07/24/02	11:52:18	47.493	07/24/02	12:58:18	46.440
07/24/02	09:41:18	39.331	07/24/02	10:47:18	46.611	07/24/02	11:53:18	46.099	07/24/02	12:59:18	42.772
07/24/02	09:42:18	54.887	07/24/02	10:48:18	46.867	07/24/02	11:54:18	49.028	07/24/02	13:00:18	44.137
07/24/02	09:43:18	45.104	07/24/02	10:49:18	47.379	07/24/02	11:55:18	46.611	07/24/02	13:01:18	41.236

LAGO VISTA AND CRYSTAL RIVER PKWY. - NO. 7553 cont.

Date	Time	Pres (PSI)
07/24/02	13:02:18	41.862
07/24/02	13:03:18	42.317
07/24/02	13:04:18	44.279
07/24/02	13:05:18	43.028
07/24/02	13:06:18	43.028
07/24/02	13:07:18	43.909
07/24/02	13:08:18	42.061
07/24/02	13:09:18	43.568
07/24/02	13:10:18	43.198
07/24/02	13:11:18	42.999
07/24/02	13:12:18	42.743
07/24/02	13:13:18	43.710
07/24/02	13:14:18	42.772
07/24/02	13:15:18	42.772
07/24/02	13:16:18	47.009
07/24/02	13:17:18	44.535
07/24/02	13:18:18	45.047
07/24/02	13:19:18	43.511
07/24/02	13:20:18	44.848
07/24/02	13:21:18	43.767
07/24/02	13:22:18	48.630
07/24/02	13:23:18	45.417
07/24/02	13:24:18	47.550
07/24/02	13:25:18	46.981
07/24/02	13:26:18	46.497
07/24/02	13:27:18	44.393
07/24/02	13:28:18	45.985
07/24/02	13:29:18	46.241
07/24/02	13:30:18	44.222
07/24/02	13:31:18	46.725
07/24/02	13:32:18	45.786
07/24/02	13:33:18	45.872
07/24/02	13:34:18	46.924
07/24/02	13:35:18	46.753
07/24/02	13:36:18	47.749
07/24/02	13:37:18	46.412
07/24/02	13:38:18	47.066
07/24/02	13:39:18	44.137
07/24/02	13:40:18	46.099
07/24/02	13:41:18	44.734
07/24/02	13:42:18	42.743
07/24/02	13:43:18	43.198
07/24/02	13:44:18	45.673
07/24/02	13:45:18	45.587
07/24/02	13:46:18	43.341
07/24/02	13:47:18	46.611
07/24/02	13:48:18	46.753
07/24/02	13:49:18	46.412
07/24/02	13:50:18	46.981
07/24/02	13:51:18	47.379
07/24/02	13:52:18	46.497
07/24/02	13:53:18	46.099
07/24/02	13:54:18	48.005
07/24/02	13:55:18	46.412
07/24/02	13:56:18	47.806
07/24/02	13:57:18	47.180
07/24/02	13:58:18	44.734
07/24/02	13:59:18	48.886
07/24/02	14:00:18	45.104
07/24/02	14:01:18	47.322
07/24/02	14:02:18	43.341
07/24/02	14:03:18	46.298
07/24/02	14:04:18	47.180
07/24/02	14:05:18	0.284
07/24/02	14:06:18	0.256
07/24/02	14:07:18	0.256
07/24/02	14:08:18	0.341
07/24/02	14:09:18	0.284
07/24/02	14:10:18	0.341
07/24/02	14:11:18	0.341
07/24/02	14:12:18	0.284
07/24/02	14:13:18	0.284
07/24/02	14:14:18	0.284
07/24/02	14:15:18	0.284
07/24/02	14:16:18	0.284
07/24/02	14:17:18	0.341
07/24/02	14:18:18	0.341
07/24/02	14:19:18	0.341
07/24/02	14:20:18	0.284
07/24/02	14:21:18	0.341
07/24/02	14:22:18	0.284
07/24/02	14:23:18	0.284
07/24/02	14:24:18	0.284
07/24/02	14:25:18	0.284
07/24/02	14:26:18	0.284
07/24/02	14:27:18	0.284
07/24/02	14:28:18	0.284
07/24/02	14:29:18	0.284
07/24/02	14:30:18	0.284
07/24/02	14:31:18	0.284
07/24/02	14:32:18	0.284
07/24/02	14:33:18	0.284
07/24/02	14:34:18	0.256
07/24/02	14:35:18	0.199
07/24/02	14:36:18	0.256
07/24/02	14:37:18	0.199
07/24/02	14:38:18	0.256
07/24/02	14:39:18	0.256
07/24/02	14:40:18	0.256
07/24/02	14:41:18	0.256
07/24/02	14:42:18	0.199
07/24/02	14:43:18	0.199
07/24/02	14:44:18	0.199
07/24/02	14:45:18	0.256
07/24/02	14:46:18	0.256
07/24/02	14:47:18	0.199
07/24/02	14:48:18	0.199
07/24/02	14:49:18	0.256
07/24/02	14:50:18	0.199
07/24/02	14:51:18	0.199
07/24/02	14:52:18	0.199
07/24/02	14:53:18	0.199
07/24/02	14:54:18	0.199
07/24/02	14:55:18	0.199
07/24/02	14:56:18	0.199
07/24/02	14:57:18	0.284
07/24/02	14:58:18	0.256
07/24/02	14:59:18	0.142
07/24/02	15:00:18	0.199
07/24/02	15:01:18	0.256
07/24/02	15:02:18	0.256
07/24/02	15:03:18	0.199
07/24/02	15:04:18	0.256
07/24/02	15:05:18	0.256
07/24/02	15:06:18	0.256
07/24/02	15:07:18	0.256
07/24/02	15:08:18	0.256
07/24/02	15:09:18	0.256
07/24/02	15:10:18	0.284
07/24/02	15:11:18	0.284
07/24/02	15:12:18	0.341
07/24/02	15:13:18	0.284
07/24/02	15:14:18	0.341
07/24/02	15:15:18	0.284
07/24/02	15:16:18	0.341
07/24/02	15:17:18	0.284
07/24/02	15:18:18	0.284
07/24/02	15:19:18	0.284
07/24/02	15:20:18	0.284
07/24/02	15:21:18	0.284
07/24/02	15:22:18	0.284
07/24/02	15:23:18	0.284
07/24/02	15:24:18	0.256
07/24/02	15:25:18	0.256
07/24/02	15:26:18	0.284
07/24/02	15:27:18	0.256
07/24/02	15:28:18	0.256
07/24/02	15:29:18	0.284
07/24/02	15:30:18	0.256
07/24/02	15:31:18	0.256
07/24/02	15:32:18	0.256
07/24/02	15:33:18	0.256
07/24/02	15:34:18	0.284
07/24/02	15:35:18	0.256
07/24/02	15:36:18	0.256
07/24/02	15:37:18	0.284
07/24/02	15:38:18	0.284
07/24/02	15:39:18	0.341
07/24/02	15:40:18	0.284
07/24/02	15:41:18	0.284
07/24/02	15:42:18	0.284

LOCKWOOD AND MAGNOLIA - NO. 7156

Date	Time	Pres (PSI)
05/06/02	13:11:23	-0.739
05/06/02	13:12:23	-0.739
05/06/02	13:13:23	-0.739
05/06/02	13:14:23	-0.739
05/06/02	13:15:23	-0.739
05/06/02	13:16:23	-0.739
05/06/02	13:17:23	-0.739
05/06/02	13:18:23	81.022
05/06/02	13:19:23	78.718
05/06/02	13:20:23	80.311
05/06/02	13:21:23	80.709
05/06/02	13:22:23	81.335
05/06/02	13:23:23	80.254
05/06/02	13:24:23	80.937
05/06/02	13:25:23	81.534
05/06/02	13:26:23	79.856
05/06/02	13:27:23	80.539
05/06/02	13:28:23	80.140
05/06/02	13:29:23	81.420
05/06/02	13:30:23	77.353
05/06/02	13:31:23	76.017
05/06/02	13:32:23	77.154
05/06/02	13:33:23	76.102
05/06/02	13:34:23	77.126
05/06/02	13:35:23	78.349
05/06/02	13:36:23	80.482
05/06/02	13:37:23	81.136
05/06/02	13:38:23	81.420
05/06/02	13:39:23	80.624
05/06/02	13:40:23	82.728
05/06/02	13:41:23	81.193
05/06/02	13:42:23	81.022
05/06/02	13:43:23	80.425
05/06/02	13:44:23	79.060
05/06/02	13:45:23	79.344
05/06/02	13:46:23	76.870
05/06/02	13:47:23	78.406
05/06/02	13:48:23	76.984
05/06/02	13:49:23	78.548
05/06/02	13:50:23	78.320
05/06/02	13:51:23	78.491
05/06/02	13:52:23	81.591
05/06/02	13:53:23	80.425
05/06/02	13:54:23	79.629
05/06/02	13:55:23	79.998
05/06/02	13:56:23	78.946
05/06/02	13:57:23	79.373
05/06/02	13:58:23	80.709
05/06/02	13:59:23	81.932
05/06/02	14:00:23	79.458
05/06/02	14:01:23	80.396
05/06/02	14:02:23	80.226
05/06/02	14:03:23	80.624
05/06/02	14:04:23	78.491
05/06/02	14:05:23	80.652
05/06/02	14:06:23	80.254
05/06/02	14:07:23	80.795
05/06/02	14:08:23	79.941
05/06/02	14:09:23	79.429
05/06/02	14:10:23	79.828
05/06/02	14:11:23	79.913
05/06/02	14:12:23	79.629
05/06/02	14:13:23	81.335
05/06/02	14:14:23	79.515
05/06/02	14:15:23	78.974
05/06/02	14:16:23	79.458
05/06/02	14:17:23	79.685
05/06/02	14:18:23	79.373
05/06/02	14:19:23	80.340
05/06/02	14:20:23	80.539
05/06/02	14:21:23	77.553
05/06/02	14:22:23	80.937
05/06/02	14:23:23	80.965
05/06/02	14:24:23	80.027
05/06/02	14:25:23	79.742
05/06/02	14:26:23	76.159
05/06/02	14:27:23	78.093
05/06/02	14:28:23	77.695
05/06/02	14:29:23	77.553
05/06/02	14:30:23	76.415
05/06/02	14:31:23	80.396
05/06/02	14:32:23	80.738
05/06/02	14:33:23	80.709
05/06/02	14:34:23	81.505
05/06/02	14:35:23	79.287
05/06/02	14:36:23	80.482
05/06/02	14:37:23	70.528
05/06/02	14:38:23	71.239
05/06/02	14:39:23	71.637
05/06/02	14:40:23	70.926
05/06/02	14:41:23	70.756
05/06/02	14:42:23	68.822
05/06/02	14:43:23	80.311
05/06/02	14:44:23	80.709
05/06/02	14:45:23	79.202
05/06/02	14:46:23	79.202
05/06/02	14:47:23	80.027
05/06/02	14:48:23	79.913
05/06/02	14:49:23	79.287
05/06/02	14:50:23	79.771
05/06/02	14:51:23	80.567
05/06/02	14:52:23	79.202
05/06/02	14:53:23	79.515
05/06/02	14:54:23	78.633
05/06/02	14:55:23	80.823
05/06/02	14:56:23	78.861
05/06/02	14:57:23	79.515
05/06/02	14:58:23	79.742
05/06/02	14:59:23	78.662
05/06/02	15:00:23	80.311
05/06/02	15:01:23	81.136
05/06/02	15:02:23	78.463
05/06/02	15:03:23	79.202
05/06/02	15:04:23	79.742
05/06/02	15:05:23	75.704
05/06/02	15:06:23	77.211
05/06/02	15:07:23	76.244
05/06/02	15:08:23	77.553
05/06/02	15:09:23	77.609
05/06/02	15:10:23	76.187
05/06/02	15:11:23	77.126
05/06/02	15:12:23	78.548
05/06/02	15:13:23	76.244
05/06/02	15:14:23	76.671
05/06/02	15:15:23	76.557
05/06/02	15:16:23	76.074
05/06/02	15:17:23	76.017
05/06/02	15:18:23	75.789
05/06/02	15:19:23	77.268
05/06/02	15:20:23	76.557
05/06/02	15:21:23	76.586
05/06/02	15:22:23	77.297
05/06/02	15:23:23	75.448
05/06/02	15:24:23	76.358
05/06/02	15:25:23	76.671
05/06/02	15:26:23	76.557
05/06/02	15:27:23	76.756
05/06/02	15:28:23	76.898
05/06/02	15:29:23	75.931
05/06/02	15:30:23	77.211
05/06/02	15:31:23	77.069
05/06/02	15:32:23	74.965
05/06/02	15:33:23	76.671
05/06/02	15:34:23	75.619
05/06/02	15:35:23	72.661
05/06/02	15:36:23	82.956
05/06/02	15:37:23	80.254
05/06/02	15:38:23	76.671
05/06/02	15:39:23	76.586
05/06/02	15:40:23	77.695
05/06/02	15:41:23	77.353
05/06/02	15:42:23	77.752
05/06/02	15:43:23	78.406
05/06/02	15:44:23	78.491
05/06/02	15:45:23	77.695
05/06/02	15:46:23	77.126
05/06/02	15:47:23	77.297
05/06/02	15:48:23	78.662
05/06/02	15:49:23	76.358
05/06/02	15:50:23	76.472
05/06/02	15:51:23	78.804
05/06/02	15:52:23	76.728
05/06/02	15:53:23	77.524
05/06/02	15:54:23	76.671
05/06/02	15:55:23	78.491
05/06/02	15:56:23	77.780
05/06/02	15:57:23	77.154
05/06/02	15:58:23	79.344
05/06/02	15:59:23	77.382
05/06/02	16:00:23	78.491
05/06/02	16:01:23	76.671
05/06/02	16:02:23	77.865
05/06/02	16:03:23	75.533
05/06/02	16:04:23	77.382
05/06/02	16:05:23	77.126
05/06/02	16:06:23	78.491
05/06/02	16:07:23	75.960
05/06/02	16:08:23	80.311
05/06/02	16:09:23	76.415
05/06/02	16:10:23	78.946
05/06/02	16:11:23	79.828
05/06/02	16:12:23	78.320
05/06/02	16:13:23	80.425
05/06/02	16:14:23	79.429
05/06/02	16:15:23	77.695
05/06/02	16:16:23	79.373
05/06/02	16:17:23	78.662
05/06/02	16:18:23	83.752
05/06/02	16:19:23	81.989
05/06/02	16:20:23	82.387
05/06/02	16:21:23	81.449
05/06/02	16:22:23	82.330
05/06/02	16:23:23	82.927
05/06/02	16:24:23	82.529
05/06/02	16:25:23	81.193
05/06/02	16:26:23	80.795
05/06/02	16:27:23	81.619
05/06/02	16:28:23	80.396
05/06/02	16:29:23	80.738
05/06/02	16:30:23	80.226
05/06/02	16:31:23	80.482
05/06/02	16:32:23	80.624
05/06/02	16:33:23	80.482
05/06/02	16:34:23	80.965
05/06/02	16:35:23	79.145
05/06/02	16:36:23	81.050
05/06/02	16:37:23	79.742
05/06/02	16:38:23	80.880
05/06/02	16:39:23	78.491
05/06/02	16:40:23	80.169
05/06/02	16:41:23	80.425
05/06/02	16:42:23	81.193
05/06/02	16:43:23	79.828
05/06/02	16:44:23	79.060
05/06/02	16:45:23	81.363
05/06/02	16:46:23	79.629
05/06/02	16:47:23	78.861
05/06/02	16:48:23	78.349
05/06/02	16:49:23	78.747
05/06/02	16:50:23	78.974
05/06/02	16:51:23	78.946
05/06/02	16:52:23	80.965
05/06/02	16:53:23	78.349
05/06/02	16:54:23	79.998
05/06/02	16:55:23	80.254
05/06/02	16:56:23	78.463
05/06/02	16:57:23	80.254
05/06/02	16:58:23	80.880
05/06/02	16:59:23	80.027
05/06/02	17:00:23	80.539
05/06/02	17:01:23	80.254
05/06/02	17:02:23	79.941
05/06/02	17:03:23	80.965
05/06/02	17:04:23	81.363
05/06/02	17:05:23	78.491
05/06/02	17:06:23	80.340
05/06/02	17:07:23	79.145
05/06/02	17:08:23	81.221
05/06/02	17:09:23	81.505
05/06/02	17:10:23	79.998
05/06/02	17:11:23	81.221
05/06/02	17:12:23	80.084
05/06/02	17:13:23	79.543
05/06/02	17:14:23	81.449
05/06/02	17:15:23	80.709
05/06/02	17:16:23	80.738
05/06/02	17:17:23	80.823
05/06/02	17:18:23	81.676
05/06/02	17:19:23	81.050
05/06/02	17:20:23	79.828
05/06/02	17:21:23	79.941
05/06/02	17:22:23	79.941
05/06/02	17:23:23	79.685
05/06/02	17:24:23	80.539
05/06/02	17:25:23	81.619
05/06/02	17:26:23	79.031
05/06/02	17:27:23	80.482
05/06/02	17:28:23	80.652
05/06/02	17:29:23	78.974
05/06/02	17:30:23	79.145
05/06/02	17:31:23	78.889
05/06/02	17:32:23	80.226
05/06/02	17:33:23	79.742
05/06/02	17:34:23	78.889

LOCKWOOD AND MAGNOLIA - NO. 7156 cont.

Date	Time	Pres (PSI)
05/06/02	17:35:23	78.974
05/06/02	17:36:23	78.463
05/06/02	17:37:23	79.145
05/06/02	17:38:23	77.951
05/06/02	17:39:23	79.202
05/06/02	17:40:23	80.880
05/06/02	17:41:23	80.482
05/06/02	17:42:23	80.482
05/06/02	17:43:23	79.913
05/06/02	17:44:23	79.856
05/06/02	17:45:23	80.396
05/06/02	17:46:23	79.742
05/06/02	17:47:23	78.633
05/06/02	17:48:23	76.500
05/06/02	17:49:23	78.861
05/06/02	17:50:23	80.709
05/06/02	17:51:23	80.539
05/06/02	17:52:23	80.425
05/06/02	17:53:23	80.340
05/06/02	17:54:23	79.742
05/06/02	17:55:23	80.965
05/06/02	17:56:23	79.117
05/06/02	17:57:23	80.425
05/06/02	17:58:23	81.335
05/06/02	17:59:23	80.937
05/06/02	18:00:23	81.363
05/06/02	18:01:23	80.140
05/06/02	18:02:23	80.795
05/06/02	18:03:23	79.998
05/06/02	18:04:23	79.259
05/06/02	18:05:23	79.856
05/06/02	18:06:23	81.335
05/06/02	18:07:23	79.373
05/06/02	18:08:23	79.742
05/06/02	18:09:23	79.629
05/06/02	18:10:23	80.027
05/06/02	18:11:23	81.818
05/06/02	18:12:23	78.064
05/06/02	18:13:23	79.429
05/06/02	18:14:23	80.169
05/06/02	18:15:23	79.771
05/06/02	18:16:23	78.263
05/06/02	18:17:23	78.548
05/06/02	18:18:23	79.685
05/06/02	18:19:23	80.140
05/06/02	18:20:23	80.254
05/06/02	18:21:23	79.629
05/06/02	18:22:23	79.373
05/06/02	18:23:23	80.254
05/06/02	18:24:23	78.662
05/06/02	18:25:23	81.335
05/06/02	18:26:23	78.491
05/06/02	18:27:23	78.576
05/06/02	18:28:23	79.031
05/06/02	18:29:23	78.718
05/06/02	18:30:23	79.600
05/06/02	18:31:23	77.951
05/06/02	18:32:23	77.126
05/06/02	18:33:23	77.524
05/06/02	18:34:23	79.145
05/06/02	18:35:23	77.780
05/06/02	18:36:23	77.865
05/06/02	18:37:23	76.898
05/06/02	18:38:23	78.633
05/06/02	18:39:23	78.008
05/06/02	18:40:23	77.865
05/06/02	18:41:23	80.624
05/06/02	18:42:23	79.828
05/06/02	18:43:23	79.117
05/06/02	18:44:23	78.320
05/06/02	18:45:23	77.439
05/06/02	18:46:23	78.889
05/06/02	18:47:23	77.780
05/06/02	18:48:23	79.145
05/06/02	18:49:23	79.600
05/06/02	18:50:23	78.889
05/06/02	18:51:23	79.685
05/06/02	18:52:23	79.685
05/06/02	18:53:23	78.263
05/06/02	18:54:23	78.747
05/06/02	18:55:23	79.828
05/06/02	18:56:23	82.643
05/06/02	18:57:23	80.709
05/06/02	18:58:23	78.548
05/06/02	18:59:23	78.946
05/06/02	19:00:23	79.828
05/06/02	19:01:23	80.624
05/06/02	19:02:23	78.633
05/06/02	19:03:23	79.771
05/06/02	19:04:23	79.600
05/06/02	19:05:23	79.543
05/06/02	19:06:23	79.031
05/06/02	19:07:23	80.937
05/06/02	19:08:23	56.337
05/06/02	19:09:23	65.494
05/06/02	19:10:23	65.750
05/06/02	19:11:23	65.096
05/06/02	19:12:23	64.385
05/06/02	19:13:23	65.807
05/06/02	19:14:23	79.117
05/06/02	19:15:23	80.140
05/06/02	19:16:23	78.235
05/06/02	19:17:23	78.463
05/06/02	19:18:23	78.747
05/06/02	19:19:23	78.747
05/06/02	19:20:23	75.221
05/06/02	19:21:23	76.074
05/06/02	19:22:23	76.074
05/06/02	19:23:23	77.439
05/06/02	19:24:23	75.761
05/06/02	19:25:23	77.353
05/06/02	19:26:23	76.955
05/06/02	19:27:23	76.159
05/06/02	19:28:23	77.069
05/06/02	19:29:23	77.211
05/06/02	19:30:23	77.922
05/06/02	19:31:23	76.102
05/06/02	19:32:23	74.424
05/06/02	19:33:23	76.898
05/06/02	19:34:23	75.533
05/06/02	19:35:23	76.330
05/06/02	19:36:23	75.846
05/06/02	19:37:23	76.187
05/06/02	19:38:23	75.931
05/06/02	19:39:23	76.415
05/06/02	19:40:23	75.789
05/06/02	19:41:23	77.353
05/06/02	19:42:23	75.476
05/06/02	19:43:23	83.525
05/06/02	19:44:23	78.008
05/06/02	19:45:23	76.017
05/06/02	19:46:23	79.543
05/06/02	19:47:23	78.463
05/06/02	19:48:23	78.633
05/06/02	19:49:23	79.344
05/06/02	19:50:23	79.685
05/06/02	19:51:23	78.747
05/06/02	19:52:23	77.666
05/06/02	19:53:23	78.178
05/06/02	19:54:23	78.576
05/06/02	19:55:23	78.178
05/06/02	19:56:23	78.320
05/06/02	19:57:23	77.041
05/06/02	19:58:23	78.633
05/06/02	19:59:23	78.804
05/06/02	20:00:23	76.500
05/06/02	20:01:23	77.951
05/06/02	20:02:23	78.662
05/06/02	20:03:23	78.662
05/06/02	20:04:23	78.804
05/06/02	20:05:23	78.804
05/06/02	20:06:23	77.609
05/06/02	20:07:23	78.150
05/06/02	20:08:23	78.064
05/06/02	20:09:23	78.150
05/06/02	20:10:23	78.491
05/06/02	20:11:23	78.093
05/06/02	20:12:23	78.491
05/06/02	20:13:23	77.553
05/06/02	20:14:23	78.889
05/06/02	20:15:23	75.875
05/06/02	20:16:23	79.458
05/06/02	20:17:23	77.439
05/06/02	20:18:23	78.178
05/06/02	20:19:23	80.140
05/06/02	20:20:23	79.458
05/06/02	20:21:23	78.064
05/06/02	20:22:23	80.254
05/06/02	20:23:23	78.804
05/06/02	20:24:23	78.974
05/06/02	20:25:23	78.320
05/06/02	20:26:23	79.458
05/06/02	20:27:23	79.060
05/06/02	20:28:23	80.425
05/06/02	20:29:23	77.951
05/06/02	20:30:23	78.463
05/06/02	20:31:23	79.117
05/06/02	20:32:23	76.813
05/06/02	20:33:23	79.543
05/06/02	20:34:23	78.150
05/06/02	20:35:23	79.458
05/06/02	20:36:23	78.263
05/06/02	20:37:23	77.467
05/06/02	20:38:23	79.287
05/06/02	20:39:23	77.666
05/06/02	20:40:23	79.742
05/06/02	20:41:23	77.524
05/06/02	20:42:23	77.382
05/06/02	20:43:23	79.202
05/06/02	20:44:23	76.273
05/06/02	20:45:23	78.974
05/06/02	20:46:23	77.666
05/06/02	20:47:23	78.548
05/06/02	20:48:23	77.353
05/06/02	20:49:23	78.093
05/06/02	20:50:23	76.898
05/06/02	20:51:23	78.263
05/06/02	20:52:23	79.344
05/06/02	20:53:23	78.008
05/06/02	20:54:23	78.946
05/06/02	20:55:23	78.008
05/06/02	20:56:23	79.259
05/06/02	20:57:23	77.666
05/06/02	20:58:23	78.718
05/06/02	20:59:23	77.837
05/06/02	21:00:23	77.865
05/06/02	21:01:23	78.889
05/06/02	21:02:23	77.837
05/06/02	21:03:23	79.429
05/06/02	21:04:23	77.865
05/06/02	21:05:23	78.320
05/06/02	21:06:23	78.235
05/06/02	21:07:23	79.828
05/06/02	21:08:23	77.922
05/06/02	21:09:23	78.946
05/06/02	21:10:23	76.244
05/06/02	21:11:23	78.889
05/06/02	21:12:23	79.429
05/06/02	21:13:23	78.718
05/06/02	21:14:23	78.463
05/06/02	21:15:23	78.178
05/06/02	21:16:23	78.633
05/06/02	21:17:23	77.951
05/06/02	21:18:23	77.041
05/06/02	21:19:23	78.633
05/06/02	21:20:23	77.865
05/06/02	21:21:23	78.150
05/06/02	21:22:23	77.211
05/06/02	21:23:23	79.202
05/06/02	21:24:23	78.718
05/06/02	21:25:23	78.974
05/06/02	21:26:23	78.662
05/06/02	21:27:23	81.136
05/06/02	21:28:23	79.828
05/06/02	21:29:23	79.742
05/06/02	21:30:23	79.742
05/06/02	21:31:23	80.539
05/06/02	21:32:23	79.742
05/06/02	21:33:23	79.941
05/06/02	21:34:23	78.889
05/06/02	21:35:23	78.093
05/06/02	21:36:23	78.093
05/06/02	21:37:23	76.586
05/06/02	21:38:23	79.429
05/06/02	21:39:23	78.491
05/06/02	21:40:23	78.576
05/06/02	21:41:23	78.320
05/06/02	21:42:23	77.837
05/06/02	21:43:23	79.515
05/06/02	21:44:23	77.951
05/06/02	21:45:23	78.150
05/06/02	21:46:23	78.889
05/06/02	21:47:23	77.041
05/06/02	21:48:23	77.553
05/06/02	21:49:23	78.946
05/06/02	21:50:23	78.747
05/06/02	21:51:23	79.429
05/06/02	21:52:23	78.974
05/06/02	21:53:23	79.543
05/06/02	21:54:23	79.429
05/06/02	21:55:23	78.662
05/06/02	21:56:23	80.226
05/06/02	21:57:23	80.027
05/06/02	21:58:23	80.027

LOCKWOOD AND MAGNOLIA - NO. 7156 cont.

Date	Time	Pres (PSI)	Date	Time	Pres (PSI)	Date	Time	Pres (PSI)	Date	Time	Pres (PSI)
05/06/02	21:59:23	78.463	05/06/02	23:05:23	80.254	05/07/02	00:11:23	82.871	05/07/02	01:17:23	85.601
05/06/02	22:00:23	78.804	05/06/02	23:06:23	80.709	05/07/02	00:12:23	82.160	05/07/02	01:18:23	85.572
05/06/02	22:01:23	77.780	05/06/02	23:07:23	82.416	05/07/02	00:13:23	82.615	05/07/02	01:19:23	85.487
05/06/02	22:02:23	79.828	05/06/02	23:08:23	81.136	05/07/02	00:14:23	83.354	05/07/02	01:20:23	85.743
05/06/02	22:03:23	78.889	05/06/02	23:09:23	81.847	05/07/02	00:15:23	82.330	05/07/02	01:21:23	85.885
05/06/02	22:04:23	79.373	05/06/02	23:10:23	81.591	05/07/02	00:16:23	82.216	05/07/02	01:22:23	85.970
05/06/02	22:05:23	78.093	05/06/02	23:11:23	82.387	05/07/02	00:17:23	81.676	05/07/02	01:23:23	85.117
05/06/02	22:06:23	79.344	05/06/02	23:12:23	81.022	05/07/02	00:18:23	83.212	05/07/02	01:24:23	85.345
05/06/02	22:07:23	79.685	05/06/02	23:13:23	82.529	05/07/02	00:19:23	82.927	05/07/02	01:25:23	85.743
05/06/02	22:08:23	78.235	05/06/02	23:14:23	83.013	05/07/02	00:20:23	84.008	05/07/02	01:26:23	85.003
05/06/02	22:09:23	80.425	05/06/02	23:15:23	82.387	05/07/02	00:21:23	82.956	05/07/02	01:27:23	86.681
05/06/02	22:10:23	78.861	05/06/02	23:16:23	80.795	05/07/02	00:22:23	83.041	05/07/02	01:28:23	85.572
05/06/02	22:11:23	79.202	05/06/02	23:17:23	82.785	05/07/02	00:23:23	83.098	05/07/02	01:29:23	86.084
05/06/02	22:12:23	79.060	05/06/02	23:18:23	80.880	05/07/02	00:24:23	83.923	05/07/02	01:30:23	85.658
05/06/02	22:13:23	79.031	05/06/02	23:19:23	82.160	05/07/02	00:25:23	83.354	05/07/02	01:31:23	84.634
05/06/02	22:14:23	80.311	05/06/02	23:20:23	82.216	05/07/02	00:26:23	82.416	05/07/02	01:32:23	84.947
05/06/02	22:15:23	79.941	05/06/02	23:21:23	82.700	05/07/02	00:27:23	83.013	05/07/02	01:33:23	85.743
05/06/02	22:16:23	78.974	05/06/02	23:22:23	83.496	05/07/02	00:28:23	82.529	05/07/02	01:34:23	85.288
05/06/02	22:17:23	80.027	05/06/02	23:23:23	82.387	05/07/02	00:29:23	83.126	05/07/02	01:35:23	84.719
05/06/02	22:18:23	79.060	05/06/02	23:24:23	82.074	05/07/02	00:30:23	83.980	05/07/02	01:36:23	85.913
05/06/02	22:19:23	79.685	05/06/02	23:25:23	83.269	05/07/02	00:31:23	83.212	05/07/02	01:37:23	85.288
05/06/02	22:20:23	78.861	05/06/02	23:26:23	66.120	05/07/02	00:32:23	83.610	05/07/02	01:38:23	85.032
05/06/02	22:21:23	79.941	05/06/02	23:27:23	71.609	05/07/02	00:33:23	83.809	05/07/02	01:39:23	85.487
05/06/02	22:22:23	81.136	05/06/02	23:28:23	71.637	05/07/02	00:34:23	82.472	05/07/02	01:40:23	85.117
05/06/02	22:23:23	81.733	05/06/02	23:29:23	70.414	05/07/02	00:35:23	83.525	05/07/02	01:41:23	85.970
05/06/02	22:24:23	80.027	05/06/02	23:30:23	68.537	05/07/02	00:36:23	83.439	05/07/02	01:42:23	84.634
05/06/02	22:25:23	80.880	05/06/02	23:31:23	69.391	05/07/02	00:37:23	83.809	05/07/02	01:43:23	85.515
05/06/02	22:26:23	81.107	05/06/02	23:32:23	79.344	05/07/02	00:38:23	83.752	05/07/02	01:44:23	73.457
05/06/02	22:27:23	82.074	05/06/02	23:33:23	81.193	05/07/02	00:39:23	83.183	05/07/02	01:45:23	80.226
05/06/02	22:28:23	81.193	05/06/02	23:34:23	79.344	05/07/02	00:40:23	83.354	05/07/02	01:46:23	80.482
05/06/02	22:29:23	81.363	05/06/02	23:35:23	79.031	05/07/02	00:41:23	82.728	05/07/02	01:47:23	88.473
05/06/02	22:30:23	80.652	05/06/02	23:36:23	80.254	05/07/02	00:42:23	83.894	05/07/02	01:48:23	84.378
05/06/02	22:31:23	81.363	05/06/02	23:37:23	79.373	05/07/02	00:43:23	83.752	05/07/02	01:49:23	84.406
05/06/02	22:32:23	81.505	05/06/02	23:38:23	80.652	05/07/02	00:44:23	87.108	05/07/02	01:50:23	85.487
05/06/02	22:33:23	79.828	05/06/02	23:39:23	79.202	05/07/02	00:45:23	85.203	05/07/02	01:51:23	85.430
05/06/02	22:34:23	79.373	05/06/02	23:40:23	79.828	05/07/02	00:46:23	84.236	05/07/02	01:52:23	85.089
05/06/02	22:35:23	80.254	05/06/02	23:41:23	79.117	05/07/02	00:47:23	85.885	05/07/02	01:53:23	84.861
05/06/02	22:36:23	79.685	05/06/02	23:42:23	79.031	05/07/02	00:48:23	84.605	05/07/02	01:54:23	85.430
05/06/02	22:37:23	80.169	05/06/02	23:43:23	79.287	05/07/02	00:49:23	85.345	05/07/02	01:55:23	85.203
05/06/02	22:38:23	59.579	05/06/02	23:44:23	80.738	05/07/02	00:50:23	85.174	05/07/02	01:56:23	85.487
05/06/02	22:39:23	66.348	05/06/02	23:45:23	80.340	05/07/02	00:51:23	85.828	05/07/02	01:57:23	85.515
05/06/02	22:40:23	65.239	05/06/02	23:46:23	80.027	05/07/02	00:52:23	85.686	05/07/02	01:58:23	85.174
05/06/02	22:41:23	78.150	05/06/02	23:47:23	78.718	05/07/02	00:53:23	84.719	05/07/02	01:59:23	84.804
05/06/02	22:42:23	80.567	05/06/02	23:48:23	79.202	05/07/02	00:54:23	85.913	05/07/02	02:00:23	84.634
05/06/02	22:43:23	76.870	05/06/02	23:49:23	80.795	05/07/02	00:55:23	85.288	05/07/02	02:01:23	85.885
05/06/02	22:44:23	78.946	05/06/02	23:50:23	79.856	05/07/02	00:56:23	85.515	05/07/02	02:02:23	85.430
05/06/02	22:45:23	77.865	05/06/02	23:51:23	80.482	05/07/02	00:57:23	85.658	05/07/02	02:03:23	85.601
05/06/02	22:46:23	77.922	05/06/02	23:52:23	79.543	05/07/02	00:58:23	85.885	05/07/02	02:04:23	84.463
05/06/02	22:47:23	77.865	05/06/02	23:53:23	79.828	05/07/02	00:59:23	85.174	05/07/02	02:05:23	84.804
05/06/02	22:48:23	78.463	05/06/02	23:54:23	79.629	05/07/02	01:00:23	85.402	05/07/02	02:06:23	86.397
05/06/02	22:49:23	78.804	05/06/02	23:55:23	80.027	05/07/02	01:01:23	85.658	05/07/02	02:07:23	85.203
05/06/02	22:50:23	78.093	05/06/02	23:56:23	78.974	05/07/02	01:02:23	85.345	05/07/02	02:08:23	85.402
05/06/02	22:51:23	78.349	05/06/02	23:57:23	79.856	05/07/02	01:03:23	84.605	05/07/02	02:09:23	85.572
05/06/02	22:52:23	84.292	05/06/02	23:58:23	79.856	05/07/02	01:04:23	86.226	05/07/02	02:10:23	85.601
05/06/02	22:53:23	78.406	05/06/02	23:59:23	79.287	05/07/02	01:05:23	84.804	05/07/02	02:11:23	85.828
05/06/02	22:54:23	79.629	05/07/02	00:00:23	79.913	05/07/02	01:06:23	84.890	05/07/02	02:12:23	85.658
05/06/02	22:55:23	79.600	05/07/02	00:01:23	79.913	05/07/02	01:07:23	85.658	05/07/02	02:13:23	85.259
05/06/02	22:56:23	80.254	05/07/02	00:02:23	80.709	05/07/02	01:08:23	84.691	05/07/02	02:14:23	85.686
05/06/02	22:57:23	78.576	05/07/02	00:03:23	80.226	05/07/02	01:09:23	85.686	05/07/02	02:15:23	85.601
05/06/02	22:58:23	79.685	05/07/02	00:04:23	79.856	05/07/02	01:10:23	85.999	05/07/02	02:16:23	86.056
05/06/02	22:59:23	79.913	05/07/02	00:05:23	79.060	05/07/02	01:11:23	85.515	05/07/02	02:17:23	85.913
05/06/02	23:00:23	79.856	05/07/02	00:06:23	80.311	05/07/02	01:12:23	85.999	05/07/02	02:18:23	85.743
05/06/02	23:01:23	408.153	05/07/02	00:07:23	79.828	05/07/02	01:13:23	85.658	05/07/02	02:19:23	86.056
05/06/02	23:02:23	81.221	05/07/02	00:08:23	79.259	05/07/02	01:14:23	85.117	05/07/02	02:20:23	86.056
05/06/02	23:03:23	81.363	05/07/02	00:09:23	88.132	05/07/02	01:15:23	86.198	05/07/02	02:21:23	85.828
05/06/02	23:04:23	80.567	05/07/02	00:10:23	80.425	05/07/02	01:16:23	84.605	05/07/02	02:22:23	86.482

LOCKWOOD AND MAGNOLIA - NO. 7156 cont.

Date	Time	Pres (PSI)
05/07/02	02:23:23	86.369
05/07/02	02:24:23	85.828
05/07/02	02:25:23	85.970
05/07/02	02:26:23	87.279
05/07/02	02:27:23	86.852
05/07/02	02:28:23	86.198
05/07/02	02:29:23	86.880
05/07/02	02:30:23	85.999
05/07/02	02:31:23	86.624
05/07/02	02:32:23	86.369
05/07/02	02:33:23	85.686
05/07/02	02:34:23	85.970
05/07/02	02:35:23	86.226
05/07/02	02:36:23	86.283
05/07/02	02:37:23	86.369
05/07/02	02:38:23	86.141
05/07/02	02:39:23	85.601
05/07/02	02:40:23	85.430
05/07/02	02:41:23	86.454
05/07/02	02:42:23	85.658
05/07/02	02:43:23	85.800
05/07/02	02:44:23	85.999
05/07/02	02:45:23	85.800
05/07/02	02:46:23	86.198
05/07/02	02:47:23	85.032
05/07/02	02:48:23	86.141
05/07/02	02:49:23	85.515
05/07/02	02:50:23	85.913
05/07/02	02:51:23	86.084
05/07/02	02:52:23	85.800
05/07/02	02:53:23	85.743
05/07/02	02:54:23	86.596
05/07/02	02:55:23	86.312
05/07/02	02:56:23	85.686
05/07/02	02:57:23	86.226
05/07/02	02:58:23	85.999
05/07/02	02:59:23	86.539
05/07/02	03:00:23	84.719
05/07/02	03:01:23	86.056
05/07/02	03:02:23	85.572
05/07/02	03:03:23	85.515
05/07/02	03:04:23	85.515
05/07/02	03:05:23	85.402
05/07/02	03:06:23	86.084
05/07/02	03:07:23	85.288
05/07/02	03:08:23	85.203
05/07/02	03:09:23	86.198
05/07/02	03:10:23	86.596
05/07/02	03:11:23	85.515
05/07/02	03:12:23	85.970
05/07/02	03:13:23	84.605
05/07/02	03:14:23	85.515
05/07/02	03:15:23	86.283
05/07/02	03:16:23	85.402
05/07/02	03:17:23	85.601
05/07/02	03:18:23	85.743
05/07/02	03:19:23	85.515
05/07/02	03:20:23	84.008
05/07/02	03:21:23	86.454
05/07/02	03:22:23	84.321
05/07/02	03:23:23	85.572
05/07/02	03:24:23	86.283
05/07/02	03:25:23	85.487
05/07/02	03:26:23	85.032
05/07/02	03:27:23	85.828
05/07/02	03:28:23	85.402
05/07/02	03:29:23	85.430
05/07/02	03:30:23	85.487
05/07/02	03:31:23	85.345
05/07/02	03:32:23	85.601
05/07/02	03:33:23	85.089
05/07/02	03:34:23	85.800
05/07/02	03:35:23	84.605
05/07/02	03:36:23	85.487
05/07/02	03:37:23	85.658
05/07/02	03:38:23	85.572
05/07/02	03:39:23	85.117
05/07/02	03:40:23	83.923
05/07/02	03:41:23	85.259
05/07/02	03:42:23	86.596
05/07/02	03:43:23	85.430
05/07/02	03:44:23	85.345
05/07/02	03:45:23	85.743
05/07/02	03:46:23	85.515
05/07/02	03:47:23	86.482
05/07/02	03:48:23	85.828
05/07/02	03:49:23	85.487
05/07/02	03:50:23	85.658
05/07/02	03:51:23	85.686
05/07/02	03:52:23	85.686
05/07/02	03:53:23	85.288
05/07/02	03:54:23	85.572
05/07/02	03:55:23	85.800
05/07/02	03:56:23	85.288
05/07/02	03:57:23	85.203
05/07/02	03:58:23	85.487
05/07/02	03:59:23	86.084
05/07/02	04:00:23	85.003
05/07/02	04:01:23	86.596
05/07/02	04:02:23	86.397
05/07/02	04:03:23	86.369
05/07/02	04:04:23	86.369
05/07/02	04:05:23	86.226
05/07/02	04:06:23	85.572
05/07/02	04:07:23	86.710
05/07/02	04:08:23	85.345
05/07/02	04:09:23	86.482
05/07/02	04:10:23	85.572
05/07/02	04:11:23	85.743
05/07/02	04:12:23	86.312
05/07/02	04:13:23	85.828
05/07/02	04:14:23	85.601
05/07/02	04:15:23	86.312
05/07/02	04:16:23	85.089
05/07/02	04:17:23	85.658
05/07/02	04:18:23	86.624
05/07/02	04:19:23	85.203
05/07/02	04:20:23	86.454
05/07/02	04:21:23	85.885
05/07/02	04:22:23	85.487
05/07/02	04:23:23	86.312
05/07/02	04:24:23	85.800
05/07/02	04:25:23	85.970
05/07/02	04:26:23	86.056
05/07/02	04:27:23	85.970
05/07/02	04:28:23	85.658
05/07/02	04:29:23	85.828
05/07/02	04:30:23	85.032
05/07/02	04:31:23	85.402
05/07/02	04:32:23	86.283
05/07/02	04:33:23	85.913
05/07/02	04:34:23	85.259
05/07/02	04:35:23	85.572
05/07/02	04:36:23	85.515
05/07/02	04:37:23	85.430
05/07/02	04:38:23	85.828
05/07/02	04:39:23	85.572
05/07/02	04:40:23	85.003
05/07/02	04:41:23	85.117
05/07/02	04:42:23	85.686
05/07/02	04:43:23	85.032
05/07/02	04:44:23	85.686
05/07/02	04:45:23	84.947
05/07/02	04:46:23	85.259
05/07/02	04:47:23	85.345
05/07/02	04:48:23	85.686
05/07/02	04:49:23	85.572
05/07/02	04:50:23	85.003
05/07/02	04:51:23	85.487
05/07/02	04:52:23	85.913
05/07/02	04:53:23	85.515
05/07/02	04:54:23	85.430
05/07/02	04:55:23	85.601
05/07/02	04:56:23	85.089
05/07/02	04:57:23	85.658
05/07/02	04:58:23	85.601
05/07/02	04:59:23	85.203
05/07/02	05:00:23	84.719
05/07/02	05:01:23	85.658
05/07/02	05:02:23	84.861
05/07/02	05:03:23	85.658
05/07/02	05:04:23	85.402
05/07/02	05:05:23	85.743
05/07/02	05:06:23	86.084
05/07/02	05:07:23	85.658
05/07/02	05:08:23	85.658
05/07/02	05:09:23	85.658
05/07/02	05:10:23	85.259
05/07/02	05:11:23	86.226
05/07/02	05:12:23	85.402
05/07/02	05:13:23	85.515
05/07/02	05:14:23	85.402
05/07/02	05:15:23	85.828
05/07/02	05:16:23	85.601
05/07/02	05:17:23	85.800
05/07/02	05:18:23	84.378
05/07/02	05:19:23	86.084
05/07/02	05:20:23	84.321
05/07/02	05:21:23	86.056
05/07/02	05:22:23	85.743
05/07/02	05:23:23	84.492
05/07/02	05:24:23	86.056
05/07/02	05:25:23	85.345
05/07/02	05:26:23	84.691
05/07/02	05:27:23	85.885
05/07/02	05:28:23	84.776
05/07/02	05:29:23	86.056
05/07/02	05:30:23	85.288
05/07/02	05:31:23	68.822
05/07/02	05:32:23	84.065
05/07/02	05:33:23	83.212
05/07/02	05:34:23	81.989
05/07/02	05:35:23	82.330
05/07/02	05:36:23	81.847
05/07/02	05:37:23	81.847
05/07/02	05:38:23	82.160
05/07/02	05:39:23	81.818
05/07/02	05:40:23	79.771
05/07/02	05:41:23	80.795
05/07/02	05:42:23	80.226
05/07/02	05:43:23	79.771
05/07/02	05:44:23	80.084
05/07/02	05:45:23	80.425
05/07/02	05:46:23	80.482
05/07/02	05:47:23	80.795
05/07/02	05:48:23	80.340
05/07/02	05:49:23	80.169
05/07/02	05:50:23	80.311
05/07/02	05:51:23	80.937
05/07/02	05:52:23	80.965
05/07/02	05:53:23	80.140
05/07/02	05:54:23	80.340
05/07/02	05:55:23	80.425
05/07/02	05:56:23	79.600
05/07/02	05:57:23	80.396
05/07/02	05:58:23	79.828
05/07/02	05:59:23	78.889
05/07/02	06:00:23	77.524
05/07/02	06:01:23	78.861
05/07/02	06:02:23	78.662
05/07/02	06:03:23	77.865
05/07/02	06:04:23	78.804
05/07/02	06:05:23	78.662
05/07/02	06:06:23	77.467
05/07/02	06:07:23	78.235
05/07/02	06:08:23	78.463
05/07/02	06:09:23	77.666
05/07/02	06:10:23	77.666
05/07/02	06:11:23	75.931
05/07/02	06:12:23	77.211
05/07/02	06:13:23	77.069
05/07/02	06:14:23	76.102
05/07/02	06:15:23	77.126
05/07/02	06:16:23	75.761
05/07/02	06:17:23	75.448
05/07/02	06:18:23	74.993
05/07/02	06:19:23	74.908
05/07/02	06:20:23	73.884
05/07/02	06:21:23	72.576
05/07/02	06:22:23	89.724
05/07/02	06:23:23	81.619
05/07/02	06:24:23	82.785
05/07/02	06:25:23	83.894
05/07/02	06:26:23	83.724
05/07/02	06:27:23	84.691
05/07/02	06:28:23	83.610
05/07/02	06:29:23	82.927
05/07/02	06:30:23	84.321
05/07/02	06:31:23	82.956
05/07/02	06:32:23	83.525
05/07/02	06:33:23	82.785
05/07/02	06:34:23	82.956
05/07/02	06:35:23	82.558
05/07/02	06:36:23	82.871
05/07/02	06:37:23	83.667
05/07/02	06:38:23	82.558
05/07/02	06:39:23	82.131
05/07/02	06:40:23	82.643
05/07/02	06:41:23	82.700
05/07/02	06:42:23	82.017
05/07/02	06:43:23	82.643
05/07/02	06:44:23	81.847
05/07/02	06:45:23	82.529
05/07/02	06:46:23	82.160

LOCKWOOD AND MAGNOLIA - NO. 7156 cont.

Date	Time	Pres (PSI)	Date	Time	Pres (PSI)	Date	Time	Pres (PSI)	Date	Time	Pres (PSI)
05/07/02	06:47:23	81.818	05/07/02	07:53:23	77.752	05/07/02	08:59:23	80.084	05/07/02	10:05:23	76.955
05/07/02	06:48:23	82.017	05/07/02	07:54:23	77.865	05/07/02	09:00:23	79.998	05/07/02	10:06:23	78.491
05/07/02	06:49:23	82.785	05/07/02	07:55:23	78.718	05/07/02	09:01:23	80.140	05/07/02	10:07:23	75.533
05/07/02	06:50:23	81.818	05/07/02	07:56:23	77.865	05/07/02	09:02:23	80.169	05/07/02	10:08:23	76.500
05/07/02	06:51:23	82.216	05/07/02	07:57:23	78.263	05/07/02	09:03:23	80.140	05/07/02	10:09:23	79.287
05/07/02	06:52:23	81.932	05/07/02	07:58:23	77.865	05/07/02	09:04:23	80.084	05/07/02	10:10:23	77.609
05/07/02	06:53:23	82.472	05/07/02	07:59:23	78.178	05/07/02	09:05:23	80.084	05/07/02	10:11:23	79.060
05/07/02	06:54:23	80.482	05/07/02	08:00:23	78.235	05/07/02	09:06:23	80.226	05/07/02	10:12:23	79.202
05/07/02	06:55:23	82.416	05/07/02	08:01:23	78.178	05/07/02	09:07:23	81.420	05/07/02	10:13:23	76.984
05/07/02	06:56:23	82.216	05/07/02	08:02:23	78.747	05/07/02	09:08:23	80.738	05/07/02	10:14:23	77.382
05/07/02	06:57:23	59.920	05/07/02	08:03:23	77.553	05/07/02	09:09:23	79.117	05/07/02	10:15:23	78.064
05/07/02	06:58:23	71.296	05/07/02	08:04:23	76.955	05/07/02	09:10:23	79.998	05/07/02	10:16:23	78.747
05/07/02	06:59:23	73.230	05/07/02	08:05:23	77.695	05/07/02	09:11:23	79.031	05/07/02	10:17:23	78.463
05/07/02	07:00:23	83.610	05/07/02	08:06:23	79.543	05/07/02	09:12:23	79.344	05/07/02	10:18:23	79.145
05/07/02	07:01:23	80.254	05/07/02	08:07:23	79.742	05/07/02	09:13:23	80.254	05/07/02	10:19:23	75.562
05/07/02	07:02:23	80.795	05/07/02	08:08:23	78.463	05/07/02	09:14:23	80.937	05/07/02	10:20:23	79.145
05/07/02	07:03:23	80.254	05/07/02	08:09:23	79.543	05/07/02	09:15:23	81.534	05/07/02	10:21:23	79.117
05/07/02	07:04:23	80.425	05/07/02	08:10:23	79.117	05/07/02	09:16:23	79.429	05/07/02	10:22:23	78.406
05/07/02	07:05:23	80.738	05/07/02	08:11:23	78.548	05/07/02	09:17:23	75.960	05/07/02	10:23:23	79.600
05/07/02	07:06:23	80.396	05/07/02	08:12:23	81.676	05/07/02	09:18:23	76.955	05/07/02	10:24:23	79.941
05/07/02	07:07:23	81.505	05/07/02	08:13:23	79.941	05/07/02	09:19:23	77.041	05/07/02	10:25:23	80.567
05/07/02	07:08:23	80.652	05/07/02	08:14:23	80.624	05/07/02	09:20:23	76.415	05/07/02	10:26:23	80.169
05/07/02	07:09:23	81.022	05/07/02	08:15:23	79.771	05/07/02	09:21:23	75.960	05/07/02	10:27:23	74.794
05/07/02	07:10:23	79.941	05/07/02	08:16:23	79.600	05/07/02	09:22:23	78.804	05/07/02	10:28:23	71.609
05/07/02	07:11:23	81.449	05/07/02	08:17:23	79.629	05/07/02	09:23:23	78.093	05/07/02	10:29:23	73.088
05/07/02	07:12:23	81.904	05/07/02	08:18:23	78.178	05/07/02	09:24:23	77.837	05/07/02	10:30:23	73.230
05/07/02	07:13:23	79.344	05/07/02	08:19:23	78.548	05/07/02	09:25:23	79.259	05/07/02	10:31:23	71.893
05/07/02	07:14:23	78.178	05/07/02	08:20:23	80.482	05/07/02	09:26:23	78.747	05/07/02	10:32:23	72.974
05/07/02	07:15:23	81.904	05/07/02	08:21:23	79.771	05/07/02	09:27:23	78.861	05/07/02	10:33:23	72.035
05/07/02	07:16:23	80.084	05/07/02	08:22:23	79.202	05/07/02	09:28:23	78.178	05/07/02	10:34:23	73.770
05/07/02	07:17:23	80.624	05/07/02	08:23:23	80.340	05/07/02	09:29:23	78.718	05/07/02	10:35:23	71.495
05/07/02	07:18:23	80.539	05/07/02	08:24:23	79.913	05/07/02	09:30:23	75.960	05/07/02	10:36:23	72.803
05/07/02	07:19:23	79.202	05/07/02	08:25:23	80.624	05/07/02	09:31:23	70.443	05/07/02	10:37:23	71.808
05/07/02	07:20:23	80.880	05/07/02	08:26:23	82.245	05/07/02	09:32:23	70.813	05/07/02	10:38:23	72.405
05/07/02	07:21:23	81.022	05/07/02	08:27:23	78.491	05/07/02	09:33:23	70.528	05/07/02	10:39:23	71.950
05/07/02	07:22:23	79.771	05/07/02	08:28:23	79.060	05/07/02	09:34:23	70.357	05/07/02	10:40:23	72.490
05/07/02	07:23:23	80.311	05/07/02	08:29:23	79.600	05/07/02	09:35:23	69.419	05/07/02	10:41:23	72.889
05/07/02	07:24:23	79.458	05/07/02	08:30:23	78.406	05/07/02	09:36:23	72.576	05/07/02	10:42:23	73.315
05/07/02	07:25:23	79.429	05/07/02	08:31:23	78.747	05/07/02	09:37:23	69.078	05/07/02	10:43:23	73.799
05/07/02	07:26:23	79.458	05/07/02	08:32:23	78.548	05/07/02	09:38:23	68.992	05/07/02	10:44:23	72.604
05/07/02	07:27:23	80.169	05/07/02	08:33:23	80.340	05/07/02	09:39:23	69.789	05/07/02	10:45:23	71.865
05/07/02	07:28:23	79.373	05/07/02	08:34:23	80.396	05/07/02	09:40:23	68.765	05/07/02	10:46:23	71.893
05/07/02	07:29:23	80.254	05/07/02	08:35:23	82.131	05/07/02	09:41:23	70.329	05/07/02	10:47:23	72.832
05/07/02	07:30:23	80.425	05/07/02	08:36:23	82.017	05/07/02	09:42:23	68.850	05/07/02	10:48:23	71.381
05/07/02	07:31:23	72.149	05/07/02	08:37:23	81.932	05/07/02	09:43:23	69.334	05/07/02	10:49:23	71.609
05/07/02	07:32:23	78.263	05/07/02	08:38:23	81.221	05/07/02	09:44:23	69.391	05/07/02	10:50:23	73.486
05/07/02	07:33:23	79.515	05/07/02	08:39:23	76.756	05/07/02	09:45:23	68.026	05/07/02	10:51:23	74.595
05/07/02	07:34:23	78.263	05/07/02	08:40:23	79.060	05/07/02	09:46:23	68.623	05/07/02	10:52:23	72.519
05/07/02	07:35:23	78.548	05/07/02	08:41:23	78.235	05/07/02	09:47:23	70.045	05/07/02	10:53:23	82.160
05/07/02	07:36:23	78.889	05/07/02	08:42:23	77.609	05/07/02	09:48:23	70.528	05/07/02	10:54:23	79.344
05/07/02	07:37:23	77.297	05/07/02	08:43:23	82.728	05/07/02	09:49:23	68.509	05/07/02	10:55:23	78.974
05/07/02	07:38:23	79.145	05/07/02	08:44:23	82.615	05/07/02	09:50:23	67.343	05/07/02	10:56:23	80.652
05/07/02	07:39:23	80.084	05/07/02	08:45:23	82.017	05/07/02	09:51:23	69.391	05/07/02	10:57:23	78.235
05/07/02	07:40:23	78.320	05/07/02	08:46:23	81.420	05/07/02	09:52:23	68.537	05/07/02	10:58:23	77.382
05/07/02	07:41:23	79.259	05/07/02	08:47:23	81.733	05/07/02	09:53:23	67.030	05/07/02	10:59:23	79.344
05/07/02	07:42:23	76.984	05/07/02	08:48:23	81.278	05/07/02	09:54:23	70.727	05/07/02	11:00:23	79.998
05/07/02	07:43:23	78.633	05/07/02	08:49:23	80.795	05/07/02	09:55:23	70.443	05/07/02	11:01:23	76.756
05/07/02	07:44:23	77.695	05/07/02	08:50:23	80.226	05/07/02	09:56:23	71.552	05/07/02	11:02:23	76.870
05/07/02	07:45:23	76.273	05/07/02	08:51:23	81.733	05/07/02	09:57:23	75.391	05/07/02	11:03:23	77.865
05/07/02	07:46:23	77.268	05/07/02	08:52:23	81.022	05/07/02	09:58:23	79.771	05/07/02	11:04:23	78.633
05/07/02	07:47:23	75.676	05/07/02	08:53:23	83.013	05/07/02	09:59:23	77.041	05/07/02	11:05:23	77.951
05/07/02	07:48:23	76.415	05/07/02	08:54:23	81.193	05/07/02	10:00:23	78.150	05/07/02	11:06:23	77.069
05/07/02	07:49:23	75.846	05/07/02	08:55:23	80.965	05/07/02	10:01:23	77.666	05/07/02	11:07:23	79.856
05/07/02	07:50:23	75.391	05/07/02	08:56:23	81.278	05/07/02	10:02:23	77.041	05/07/02	11:08:23	78.946
05/07/02	07:51:23	75.078	05/07/02	08:57:23	81.363	05/07/02	10:03:23	77.382	05/07/02	11:09:23	78.861
05/07/02	07:52:23	76.273	05/07/02	08:58:23	81.619	05/07/02	10:04:23	76.273	05/07/02	11:10:23	80.226

LOCKWOOD AND MAGNOLIA - NO. 7156 cont.

Date	Time	Pres (PSI)
05/07/02	11:11:23	78.548
05/07/02	11:12:23	78.889
05/07/02	11:13:23	79.543
05/07/02	11:14:23	80.254
05/07/02	11:15:23	79.543
05/07/02	11:16:23	81.278
05/07/02	11:17:23	78.263
05/07/02	11:18:23	77.154
05/07/02	11:19:23	78.463
05/07/02	11:20:23	77.439
05/07/02	11:21:23	77.353
05/07/02	11:22:23	76.671
05/07/02	11:23:23	76.244
05/07/02	11:24:23	76.870
05/07/02	11:25:23	78.946
05/07/02	11:26:23	77.353
05/07/02	11:27:23	75.676
05/07/02	11:28:23	76.955
05/07/02	11:29:23	78.576
05/07/02	11:30:23	76.870
05/07/02	11:31:23	74.879
05/07/02	11:32:23	77.553
05/07/02	11:33:23	74.026
05/07/02	11:34:23	74.595
05/07/02	11:35:23	76.642
05/07/02	11:36:23	75.363
05/07/02	11:37:23	55.456
05/07/02	11:38:23	63.561
05/07/02	11:39:23	80.254
05/07/02	11:40:23	73.628
05/07/02	11:41:23	76.102
05/07/02	11:42:23	76.187
05/07/02	11:43:23	74.822
05/07/02	11:44:23	77.126
05/07/02	11:45:23	76.472
05/07/02	11:46:23	76.244
05/07/02	11:47:23	76.358
05/07/02	11:48:23	76.244
05/07/02	11:49:23	75.476
05/07/02	11:50:23	75.221
05/07/02	11:51:23	75.078
05/07/02	11:52:23	74.965
05/07/02	11:53:23	75.221
05/07/02	11:54:23	76.273
05/07/02	11:55:23	73.543
05/07/02	11:56:23	77.297
05/07/02	11:57:23	74.822
05/07/02	11:58:23	75.562
05/07/02	11:59:23	77.780
05/07/02	12:00:23	76.984
05/07/02	12:01:23	78.349
05/07/02	12:02:23	74.111
05/07/02	12:03:23	75.192
05/07/02	12:04:23	77.837
05/07/02	12:05:23	77.439
05/07/02	12:06:23	76.102
05/07/02	12:07:23	79.259
05/07/02	12:08:23	77.382
05/07/02	12:09:23	77.752
05/07/02	12:10:23	80.027
05/07/02	12:11:23	77.837
05/07/02	12:12:23	78.150
05/07/02	12:13:23	78.008
05/07/02	12:14:23	78.263
05/07/02	12:15:23	77.524
05/07/02	12:16:23	77.211
05/07/02	12:17:23	77.666
05/07/02	12:18:23	77.837
05/07/02	12:19:23	77.865
05/07/02	12:20:23	76.586
05/07/02	12:21:23	77.553
05/07/02	12:22:23	78.008
05/07/02	12:23:23	78.861
05/07/02	12:24:23	78.320
05/07/02	12:25:23	76.500
05/07/02	12:26:23	77.268
05/07/02	12:27:23	78.064
05/07/02	12:28:23	78.662
05/07/02	12:29:23	77.439
05/07/02	12:30:23	75.761
05/07/02	12:31:23	77.609
05/07/02	12:32:23	77.069
05/07/02	12:33:23	77.553
05/07/02	12:34:23	78.235
05/07/02	12:35:23	78.576
05/07/02	12:36:23	76.500
05/07/02	12:37:23	77.666
05/07/02	12:38:23	76.813
05/07/02	12:39:23	77.553
05/07/02	12:40:23	77.439
05/07/02	12:41:23	78.889
05/07/02	12:42:23	77.553
05/07/02	12:43:23	78.235
05/07/02	12:44:23	79.913
05/07/02	12:45:23	77.951
05/07/02	12:46:23	77.695
05/07/02	12:47:23	77.382
05/07/02	12:48:23	77.553
05/07/02	12:49:23	76.984
05/07/02	12:50:23	75.960
05/07/02	12:51:23	77.069
05/07/02	12:52:23	78.406
05/07/02	12:53:23	76.358
05/07/02	12:54:23	78.491
05/07/02	12:55:23	76.756
05/07/02	12:56:23	76.984
05/07/02	12:57:23	78.349
05/07/02	12:58:23	75.761
05/07/02	12:59:23	78.662
05/07/02	13:00:23	76.756
05/07/02	13:01:23	77.780
05/07/02	13:02:23	77.666
05/07/02	13:03:23	77.041
05/07/02	13:04:23	77.922
05/07/02	13:05:23	78.093
05/07/02	13:06:23	77.467
05/07/02	13:07:23	79.429
05/07/02	13:08:23	77.865
05/07/02	13:09:23	77.382
05/07/02	13:10:23	75.875
05/07/02	13:11:23	78.150
05/07/02	13:12:23	78.463
05/07/02	13:13:23	78.263
05/07/02	13:14:23	77.609
05/07/02	13:15:23	78.946
05/07/02	13:16:23	77.268
05/07/02	13:17:23	79.998
05/07/02	13:18:23	79.458
05/07/02	13:19:23	75.363
05/07/02	13:20:23	79.458
05/07/02	13:21:23	79.771
05/07/02	13:22:23	80.169
05/07/02	13:23:23	79.031
05/07/02	13:24:23	79.259
05/07/02	13:25:23	78.718
05/07/02	13:26:23	76.813
05/07/02	13:27:23	77.069
05/07/02	13:28:23	77.069
05/07/02	13:29:23	77.780
05/07/02	13:30:23	76.074
05/07/02	13:31:23	76.756
05/07/02	13:32:23	77.382
05/07/02	13:33:23	76.813
05/07/02	13:34:23	78.263
05/07/02	13:35:23	78.463
05/07/02	13:36:23	79.031
05/07/02	13:37:23	77.041
05/07/02	13:38:23	77.524
05/07/02	13:39:23	77.695
05/07/02	13:40:23	76.415
05/07/02	13:41:23	79.031
05/07/02	13:42:23	55.825
05/07/02	13:43:23	55.541
05/07/02	13:44:23	53.863
05/07/02	13:45:23	52.071
05/07/02	13:46:23	51.559
05/07/02	13:47:23	50.877
05/07/02	13:48:23	47.635
05/07/02	13:49:23	48.204
05/07/02	13:50:23	46.128
05/07/02	13:51:23	44.933
05/07/02	13:52:23	52.868
05/07/02	13:53:23	55.114
05/07/02	13:54:23	72.405
05/07/02	13:55:23	76.728
05/07/02	13:56:23	76.671
05/07/02	13:57:23	76.273
05/07/02	13:58:23	78.064
05/07/02	13:59:23	77.666
05/07/02	14:00:23	74.908
05/07/02	14:01:23	78.178
05/07/02	14:02:23	76.671
05/07/02	14:03:23	75.676
05/07/02	14:04:23	77.353
05/07/02	14:05:23	77.780
05/07/02	14:06:23	76.898
05/07/02	14:07:23	76.102
05/07/02	14:08:23	75.448
05/07/02	14:09:23	76.159
05/07/02	14:10:23	75.306
05/07/02	14:11:23	74.481
05/07/02	14:12:23	73.855
05/07/02	14:13:23	74.168
05/07/02	14:14:23	72.746
05/07/02	14:15:23	75.533
05/07/02	14:16:23	84.548
05/07/02	14:17:23	77.126
05/07/02	14:18:23	78.406
05/07/02	14:19:23	78.633
05/07/02	14:20:23	74.908
05/07/02	14:21:23	74.794
05/07/02	14:22:23	77.154
05/07/02	14:23:23	75.135
05/07/02	14:24:23	75.875
05/07/02	14:25:23	78.349
05/07/02	14:26:23	76.756
05/07/02	14:27:23	77.524
05/07/02	14:28:23	76.244
05/07/02	14:29:23	75.931
05/07/02	14:30:23	76.358
05/07/02	14:31:23	78.008
05/07/02	14:32:23	76.586
05/07/02	14:33:23	75.221
05/07/02	14:34:23	76.870
05/07/02	14:35:23	75.391
05/07/02	14:36:23	78.491
05/07/02	14:37:23	76.273
05/07/02	14:38:23	76.728
05/07/02	14:39:23	77.439
05/07/02	14:40:23	74.993
05/07/02	14:41:23	78.463
05/07/02	14:42:23	78.633
05/07/02	14:43:23	76.586
05/07/02	14:44:23	78.804
05/07/02	14:45:23	76.870
05/07/02	14:46:23	79.828
05/07/02	14:47:23	78.150
05/07/02	14:48:23	76.500
05/07/02	14:49:23	77.069
05/07/02	14:50:23	77.154
05/07/02	14:51:23	77.353
05/07/02	14:52:23	78.576
05/07/02	14:53:23	78.946
05/07/02	14:54:23	77.780
05/07/02	14:55:23	77.524
05/07/02	14:56:23	79.060
05/07/02	14:57:23	76.898
05/07/02	14:58:23	76.472
05/07/02	14:59:23	77.353
05/07/02	15:00:23	78.064
05/07/02	15:01:23	78.548
05/07/02	15:02:23	78.064
05/07/02	15:03:23	78.576
05/07/02	15:04:23	78.150
05/07/02	15:05:23	77.666
05/07/02	15:06:23	76.813
05/07/02	15:07:23	76.017
05/07/02	15:08:23	77.439
05/07/02	15:09:23	76.955
05/07/02	15:10:23	76.586
05/07/02	15:11:23	78.235
05/07/02	15:12:23	77.780
05/07/02	15:13:23	78.633
05/07/02	15:14:23	78.008
05/07/02	15:15:23	78.804
05/07/02	15:16:23	78.263
05/07/02	15:17:23	50.194
05/07/02	15:18:23	60.091
05/07/02	15:19:23	60.006
05/07/02	15:20:23	74.908
05/07/02	15:21:23	75.960
05/07/02	15:22:23	75.135
05/07/02	15:23:23	77.297
05/07/02	15:24:23	78.064
05/07/02	15:25:23	77.609
05/07/02	15:26:23	74.424
05/07/02	15:27:23	75.448
05/07/02	15:28:23	76.813
05/07/02	15:29:23	75.619
05/07/02	15:30:23	77.211
05/07/02	15:31:23	77.865
05/07/02	15:32:23	76.984
05/07/02	15:33:23	76.557
05/07/02	15:34:23	77.382

LOCKWOOD AND MAGNOLIA - NO. 7156 cont.

Date	Time	Pres (PSI)	Date	Time	Pres (PSI)	Date	Time	Pres (PSI)	Date	Time	Pres (PSI)
05/07/02	15:35:23	76.557	05/07/02	16:41:23	77.524	05/07/02	17:47:23	79.287	05/07/02	18:53:23	77.382
05/07/02	15:36:23	76.813	05/07/02	16:42:23	79.600	05/07/02	17:48:23	79.685	05/07/02	18:54:23	79.998
05/07/02	15:37:23	76.244	05/07/02	16:43:23	78.406	05/07/02	17:49:23	79.941	05/07/02	18:55:23	77.695
05/07/02	15:38:23	76.955	05/07/02	16:44:23	79.998	05/07/02	17:50:23	79.202	05/07/02	18:56:23	77.297
05/07/02	15:39:23	76.102	05/07/02	16:45:23	78.463	05/07/02	17:51:23	78.320	05/07/02	18:57:23	76.898
05/07/02	15:40:23	76.244	05/07/02	16:46:23	79.344	05/07/02	17:52:23	79.543	05/07/02	18:58:23	78.406
05/07/02	15:41:23	77.268	05/07/02	16:47:23	81.278	05/07/02	17:53:23	78.633	05/07/02	18:59:23	79.031
05/07/02	15:42:23	76.870	05/07/02	16:48:23	80.652	05/07/02	17:54:23	79.458	05/07/02	19:00:23	78.263
05/07/02	15:43:23	76.756	05/07/02	16:49:23	77.865	05/07/02	17:55:23	75.875	05/07/02	19:01:23	79.117
05/07/02	15:44:23	77.780	05/07/02	16:50:23	80.169	05/07/02	17:56:23	81.363	05/07/02	19:02:23	80.652
05/07/02	15:45:23	77.297	05/07/02	16:51:23	79.998	05/07/02	17:57:23	79.629	05/07/02	19:03:23	78.548
05/07/02	15:46:23	75.960	05/07/02	16:52:23	80.624	05/07/02	17:58:23	79.685	05/07/02	19:04:23	76.557
05/07/02	15:47:23	76.756	05/07/02	16:53:23	80.823	05/07/02	17:59:23	79.117	05/07/02	19:05:23	79.145
05/07/02	15:48:23	76.870	05/07/02	16:54:23	79.771	05/07/02	18:00:23	78.491	05/07/02	19:06:23	78.548
05/07/02	15:49:23	76.728	05/07/02	16:55:23	80.539	05/07/02	18:01:23	78.064	05/07/02	19:07:23	77.666
05/07/02	15:50:23	77.268	05/07/02	16:56:23	60.063	05/07/02	18:02:23	76.415	05/07/02	19:08:23	76.984
05/07/02	15:51:23	85.345	05/07/02	16:57:23	86.312	05/07/02	18:03:23	80.482	05/07/02	19:09:23	79.856
05/07/02	15:52:23	82.472	05/07/02	16:58:23	80.140	05/07/02	18:04:23	78.718	05/07/02	19:10:23	78.463
05/07/02	15:53:23	78.263	05/07/02	16:59:23	79.828	05/07/02	18:05:23	78.718	05/07/02	19:11:23	79.515
05/07/02	15:54:23	79.259	05/07/02	17:00:23	79.287	05/07/02	18:06:23	79.031	05/07/02	19:12:23	78.178
05/07/02	15:55:23	80.084	05/07/02	17:01:23	80.140	05/07/02	18:07:23	78.263	05/07/02	19:13:23	79.600
05/07/02	15:56:23	81.534	05/07/02	17:02:23	80.823	05/07/02	18:08:23	78.548	05/07/02	19:14:23	78.718
05/07/02	15:57:23	80.396	05/07/02	17:03:23	80.396	05/07/02	18:09:23	78.320	05/07/02	19:15:23	78.150
05/07/02	15:58:23	80.624	05/07/02	17:04:23	80.226	05/07/02	18:10:23	80.226	05/07/02	19:16:23	79.941
05/07/02	15:59:23	80.709	05/07/02	17:05:23	80.795	05/07/02	18:11:23	78.974	05/07/02	19:17:23	79.429
05/07/02	16:00:23	81.818	05/07/02	17:06:23	80.539	05/07/02	18:12:23	78.263	05/07/02	19:18:23	79.202
05/07/02	16:01:23	81.591	05/07/02	17:07:23	79.515	05/07/02	18:13:23	79.145	05/07/02	19:19:23	79.828
05/07/02	16:02:23	80.140	05/07/02	17:08:23	81.420	05/07/02	18:14:23	77.353	05/07/02	19:20:23	78.974
05/07/02	16:03:23	81.534	05/07/02	17:09:23	6.939	05/07/02	18:15:23	79.856	05/07/02	19:21:23	79.287
05/07/02	16:04:23	81.107	05/07/02	17:10:23	81.050	05/07/02	18:16:23	78.804	05/07/02	19:22:23	77.951
05/07/02	16:05:23	81.505	05/07/02	17:11:23	79.458	05/07/02	18:17:23	78.406	05/07/02	19:23:23	79.856
05/07/02	16:06:23	80.169	05/07/02	17:12:23	80.823	05/07/02	18:18:23	80.311	05/07/02	19:24:23	77.780
05/07/02	16:07:23	80.567	05/07/02	17:13:23	78.633	05/07/02	18:19:23	78.747	05/07/02	19:25:23	78.804
05/07/02	16:08:23	81.534	05/07/02	17:14:23	58.129	05/07/02	18:20:23	78.633	05/07/02	19:26:23	78.406
05/07/02	16:09:23	77.780	05/07/02	17:15:23	61.086	05/07/02	18:21:23	79.543	05/07/02	19:27:23	78.662
05/07/02	16:10:23	80.254	05/07/02	17:16:23	62.082	05/07/02	18:22:23	79.629	05/07/02	19:28:23	77.695
05/07/02	16:11:23	80.795	05/07/02	17:17:23	64.215	05/07/02	18:23:23	78.662	05/07/02	19:29:23	77.268
05/07/02	16:12:23	80.425	05/07/02	17:18:23	62.878	05/07/02	18:24:23	78.718	05/07/02	19:30:23	78.889
05/07/02	16:13:23	79.287	05/07/02	17:19:23	66.916	05/07/02	18:25:23	80.140	05/07/02	19:31:23	79.913
05/07/02	16:14:23	79.771	05/07/02	17:20:23	79.145	05/07/02	18:26:23	79.259	05/07/02	19:32:23	78.235
05/07/02	16:15:23	79.259	05/07/02	17:21:23	80.425	05/07/02	18:27:23	76.671	05/07/02	19:33:23	78.008
05/07/02	16:16:23	80.795	05/07/02	17:22:23	76.273	05/07/02	18:28:23	78.974	05/07/02	19:34:23	79.543
05/07/02	16:17:23	83.354	05/07/02	17:23:23	78.235	05/07/02	18:29:23	78.633	05/07/02	19:35:23	79.117
05/07/02	16:18:23	80.311	05/07/02	17:24:23	77.211	05/07/02	18:30:23	78.861	05/07/02	19:36:23	78.718
05/07/02	16:19:23	80.140	05/07/02	17:25:23	78.662	05/07/02	18:31:23	78.974	05/07/02	19:37:23	79.031
05/07/02	16:20:23	79.600	05/07/02	17:26:23	77.353	05/07/02	18:32:23	78.463	05/07/02	19:38:23	79.429
05/07/02	16:21:23	82.700	05/07/02	17:27:23	76.557	05/07/02	18:33:23	80.396	05/07/02	19:39:23	78.463
05/07/02	16:22:23	81.619	05/07/02	17:28:23	76.187	05/07/02	18:34:23	78.861	05/07/02	19:40:23	78.548
05/07/02	16:23:23	82.927	05/07/02	17:29:23	77.752	05/07/02	18:35:23	78.406	05/07/02	19:41:23	78.491
05/07/02	16:24:23	80.738	05/07/02	17:30:23	78.718	05/07/02	18:36:23	79.856	05/07/02	19:42:23	78.889
05/07/02	16:25:23	81.022	05/07/02	17:31:23	77.353	05/07/02	18:37:23	80.027	05/07/02	19:43:23	80.965
05/07/02	16:26:23	81.107	05/07/02	17:32:23	77.439	05/07/02	18:38:23	78.548	05/07/02	19:44:23	79.429
05/07/02	16:27:23	83.126	05/07/02	17:33:23	76.358	05/07/02	18:39:23	78.576	05/07/02	19:45:23	79.373
05/07/02	16:28:23	81.591	05/07/02	17:34:23	77.353	05/07/02	18:40:23	78.718	05/07/02	19:46:23	77.951
05/07/02	16:29:23	79.373	05/07/02	17:35:23	77.353	05/07/02	18:41:23	79.259	05/07/02	19:47:23	78.491
05/07/02	16:30:23	81.420	05/07/02	17:36:23	78.576	05/07/02	18:42:23	79.117	05/07/02	19:48:23	78.633
05/07/02	16:31:23	80.254	05/07/02	17:37:23	77.695	05/07/02	18:43:23	77.951	05/07/02	19:49:23	78.349
05/07/02	16:32:23	80.140	05/07/02	17:38:23	76.330	05/07/02	18:44:23	79.287	05/07/02	19:50:23	78.463
05/07/02	16:33:23	79.429	05/07/02	17:39:23	76.187	05/07/02	18:45:23	79.373	05/07/02	19:51:23	79.429
05/07/02	16:34:23	79.856	05/07/02	17:40:23	76.586	05/07/02	18:46:23	77.297	05/07/02	19:52:23	80.084
05/07/02	16:35:23	79.287	05/07/02	17:41:23	84.463	05/07/02	18:47:23	76.500	05/07/02	19:53:23	78.320
05/07/02	16:36:23	77.837	05/07/02	17:42:23	80.965	05/07/02	18:48:23	79.202	05/07/02	19:54:23	79.287
05/07/02	16:37:23	79.600	05/07/02	17:43:23	79.913	05/07/02	18:49:23	80.084	05/07/02	19:55:23	78.491
05/07/02	16:38:23	79.828	05/07/02	17:44:23	80.567	05/07/02	18:50:23	76.415	05/07/02	19:56:23	78.491
05/07/02	16:39:23	78.974	05/07/02	17:45:23	79.742	05/07/02	18:51:23	80.709	05/07/02	19:57:23	77.268
05/07/02	16:40:23	79.117	05/07/02	17:46:23	79.031	05/07/02	18:52:23	78.263	05/07/02	19:58:23	79.941

LOCKWOOD AND MAGNOLIA - NO. 7156 cont.

Date	Time	Pres (PSI)
05/07/02	19:59:23	78.093
05/07/02	20:00:23	78.463
05/07/02	20:01:23	79.031
05/07/02	20:02:23	0.398
05/07/02	20:03:23	76.813
05/07/02	20:04:23	78.861
05/07/02	20:05:23	78.406
05/07/02	20:06:23	78.349
05/07/02	20:07:23	77.780
05/07/02	20:08:23	79.344
05/07/02	20:09:23	77.780
05/07/02	20:10:23	78.974
05/07/02	20:11:23	78.974
05/07/02	20:12:23	77.865
05/07/02	20:13:23	78.263
05/07/02	20:14:23	78.804
05/07/02	20:15:23	78.889
05/07/02	20:16:23	78.889
05/07/02	20:17:23	78.747
05/07/02	20:18:23	79.458
05/07/02	20:19:23	78.349
05/07/02	20:20:23	76.728
05/07/02	20:21:23	78.263
05/07/02	20:22:23	78.491
05/07/02	20:23:23	78.263
05/07/02	20:24:23	79.145
05/07/02	20:25:23	78.662
05/07/02	20:26:23	78.861
05/07/02	20:27:23	78.406
05/07/02	20:28:23	78.235
05/07/02	20:29:23	79.145
05/07/02	20:30:23	79.060
05/07/02	20:31:23	78.320
05/07/02	20:32:23	77.922
05/07/02	20:33:23	77.780
05/07/02	20:34:23	79.828
05/07/02	20:35:23	78.263
05/07/02	20:36:23	78.804
05/07/02	20:37:23	79.913
05/07/02	20:38:23	77.609
05/07/02	20:39:23	78.804
05/07/02	20:40:23	77.524
05/07/02	20:41:23	78.974
05/07/02	20:42:23	78.406
05/07/02	20:43:23	79.287
05/07/02	20:44:23	77.553
05/07/02	20:45:23	76.984
05/07/02	20:46:23	78.178
05/07/02	20:47:23	77.609
05/07/02	20:48:23	78.804
05/07/02	20:49:23	77.467
05/07/02	20:50:23	77.752
05/07/02	20:51:23	77.382
05/07/02	20:52:23	78.662
05/07/02	20:53:23	79.941
05/07/02	20:54:23	77.126
05/07/02	20:55:23	77.553
05/07/02	20:56:23	77.382
05/07/02	20:57:23	78.548
05/07/02	20:58:23	77.467
05/07/02	20:59:23	78.150
05/07/02	21:00:23	77.951
05/07/02	21:01:23	78.150
05/07/02	21:02:23	78.463
05/07/02	21:03:23	78.093
05/07/02	21:04:23	78.406
05/07/02	21:05:23	77.695
05/07/02	21:06:23	78.093
05/07/02	21:07:23	78.491
05/07/02	21:08:23	77.524
05/07/02	21:09:23	78.804
05/07/02	21:10:23	78.946
05/07/02	21:11:23	78.548
05/07/02	21:12:23	79.856
05/07/02	21:13:23	79.060
05/07/02	21:14:23	79.060
05/07/02	21:15:23	78.718
05/07/02	21:16:23	79.202
05/07/02	21:17:23	79.742
05/07/02	21:18:23	78.861
05/07/02	21:19:23	79.031
05/07/02	21:20:23	78.718
05/07/02	21:21:23	77.865
05/07/02	21:22:23	78.889
05/07/02	21:23:23	77.752
05/07/02	21:24:23	77.951
05/07/02	21:25:23	78.861
05/07/02	21:26:23	79.202
05/07/02	21:27:23	78.263
05/07/02	21:28:23	78.889
05/07/02	21:29:23	79.287
05/07/02	21:30:23	78.320
05/07/02	21:31:23	78.349
05/07/02	21:32:23	77.837
05/07/02	21:33:23	76.898
05/07/02	21:34:23	75.078
05/07/02	21:35:23	77.865
05/07/02	21:36:23	77.752
05/07/02	21:37:23	77.752
05/07/02	21:38:23	77.069
05/07/02	21:39:23	77.467
05/07/02	21:40:23	78.263
05/07/02	21:41:23	77.382
05/07/02	21:42:23	77.666
05/07/02	21:43:23	76.017
05/07/02	21:44:23	77.382
05/07/02	21:45:23	78.235
05/07/02	21:46:23	78.320
05/07/02	21:47:23	76.898
05/07/02	21:48:23	77.951
05/07/02	21:49:23	76.813
05/07/02	21:50:23	78.008
05/07/02	21:51:23	78.463
05/07/02	21:52:23	78.008
05/07/02	21:53:23	77.524
05/07/02	21:54:23	77.951
05/07/02	21:55:23	78.406
05/07/02	21:56:23	77.353
05/07/02	21:57:23	80.084
05/07/02	21:58:23	76.984
05/07/02	21:59:23	77.439
05/07/02	22:00:23	78.263
05/07/02	22:01:23	78.093
05/07/02	22:02:23	78.491
05/07/02	22:03:23	77.695
05/07/02	22:04:23	78.235
05/07/02	22:05:23	78.008
05/07/02	22:06:23	78.008
05/07/02	22:07:23	78.974
05/07/02	22:08:23	78.491
05/07/02	22:09:23	78.804
05/07/02	22:10:23	77.382
05/07/02	22:11:23	78.946
05/07/02	22:12:23	78.633
05/07/02	22:13:23	78.974
05/07/02	22:14:23	78.150
05/07/02	22:15:23	79.515
05/07/02	22:16:23	78.349
05/07/02	22:17:23	79.287
05/07/02	22:18:23	79.856
05/07/02	22:19:23	60.944
05/07/02	22:20:23	61.257
05/07/02	22:21:23	59.295
05/07/02	22:22:23	58.698
05/07/02	22:23:23	59.807
05/07/02	22:24:23	57.816
05/07/02	22:25:23	57.503
05/07/02	22:26:23	58.243
05/07/02	22:27:23	57.219
05/07/02	22:28:23	57.588
05/07/02	22:29:23	56.963
05/07/02	22:30:23	70.813
05/07/02	22:31:23	76.642
05/07/02	22:32:23	75.931
05/07/02	22:33:23	74.993
05/07/02	22:34:23	75.221
05/07/02	22:35:23	74.595
05/07/02	22:36:23	75.363
05/07/02	22:37:23	74.794
05/07/02	22:38:23	75.448
05/07/02	22:39:23	75.846
05/07/02	22:40:23	75.704
05/07/02	22:41:23	76.557
05/07/02	22:42:23	76.756
05/07/02	22:43:23	77.041
05/07/02	22:44:23	75.846
05/07/02	22:45:23	74.965
05/07/02	22:46:23	75.676
05/07/02	22:47:23	76.586
05/07/02	22:48:23	76.813
05/07/02	22:49:23	77.268
05/07/02	22:50:23	75.846
05/07/02	22:51:23	75.875
05/07/02	22:52:23	85.345
05/07/02	22:53:23	78.178
05/07/02	22:54:23	80.084
05/07/02	22:55:23	79.771
05/07/02	22:56:23	79.117
05/07/02	22:57:23	79.202
05/07/02	22:58:23	79.600
05/07/02	22:59:23	78.718
05/07/02	23:00:23	79.145
05/07/02	23:01:23	79.515
05/07/02	23:02:23	79.429
05/07/02	23:03:23	79.515
05/07/02	23:04:23	80.084
05/07/02	23:05:23	79.685
05/07/02	23:06:23	79.373
05/07/02	23:07:23	80.425
05/07/02	23:08:23	79.685
05/07/02	23:09:23	80.823
05/07/02	23:10:23	80.880
05/07/02	23:11:23	78.861
05/07/02	23:12:23	80.652
05/07/02	23:13:23	80.226
05/07/02	23:14:23	80.027
05/07/02	23:15:23	81.050
05/07/02	23:16:23	80.226
05/07/02	23:17:23	80.482
05/07/02	23:18:23	80.738
05/07/02	23:19:23	79.344
05/07/02	23:20:23	80.539
05/07/02	23:21:23	80.425
05/07/02	23:22:23	80.880
05/07/02	23:23:23	81.505
05/07/02	23:24:23	80.823
05/07/02	23:25:23	81.761
05/07/02	23:26:23	81.278
05/07/02	23:27:23	81.221
05/07/02	23:28:23	80.965
05/07/02	23:29:23	80.880
05/07/02	23:30:23	81.278
05/07/02	23:31:23	80.396
05/07/02	23:32:23	79.941
05/07/02	23:33:23	81.363
05/07/02	23:34:23	80.624
05/07/02	23:35:23	80.140
05/07/02	23:36:23	79.941
05/07/02	23:37:23	81.278
05/07/02	23:38:23	81.591
05/07/02	23:39:23	80.311
05/07/02	23:40:23	80.709
05/07/02	23:41:23	82.017
05/07/02	23:42:23	81.932
05/07/02	23:43:23	80.567
05/07/02	23:44:23	82.017
05/07/02	23:45:23	81.278
05/07/02	23:46:23	81.534
05/07/02	23:47:23	80.965
05/07/02	23:48:23	82.160
05/07/02	23:49:23	80.340
05/07/02	23:50:23	80.823
05/07/02	23:51:23	82.245
05/07/02	23:52:23	81.221
05/07/02	23:53:23	80.823
05/07/02	23:54:23	81.193
05/07/02	23:55:23	81.904
05/07/02	23:56:23	82.558
05/07/02	23:57:23	81.591
05/07/02	23:58:23	81.932
05/07/02	23:59:23	82.387
05/08/02	00:00:23	81.505
05/08/02	00:01:23	82.216
05/08/02	00:02:23	82.074
05/08/02	00:03:23	81.278
05/08/02	00:04:23	82.017
05/08/02	00:05:23	81.591
05/08/02	00:06:23	81.505
05/08/02	00:07:23	82.643
05/08/02	00:08:23	81.676
05/08/02	00:09:23	81.818
05/08/02	00:10:23	82.416
05/08/02	00:11:23	82.728
05/08/02	00:12:23	82.927
05/08/02	00:13:23	81.989
05/08/02	00:14:23	82.700
05/08/02	00:15:23	83.894
05/08/02	00:16:23	82.728
05/08/02	00:17:23	82.871
05/08/02	00:18:23	83.439
05/08/02	00:19:23	82.643
05/08/02	00:20:23	82.956
05/08/02	00:21:23	82.956
05/08/02	00:22:23	82.330

LOCKWOOD AND MAGNOLIA - NO. 7156 cont.

Date	Time	Pres (PSI)
05/08/02	00:23:23	83.980
05/08/02	00:24:23	82.785
05/08/02	00:25:23	83.809
05/08/02	00:26:23	84.065
05/08/02	00:27:23	83.837
05/08/02	00:28:23	85.259
05/08/02	00:29:23	83.439
05/08/02	00:30:23	84.093
05/08/02	00:31:23	83.667
05/08/02	00:32:23	83.582
05/08/02	00:33:23	84.008
05/08/02	00:34:23	81.534
05/08/02	00:35:23	84.890
05/08/02	00:36:23	83.837
05/08/02	00:37:23	84.463
05/08/02	00:38:23	83.980
05/08/02	00:39:23	83.837
05/08/02	00:40:23	83.269
05/08/02	00:41:23	83.183
05/08/02	00:42:23	84.236
05/08/02	00:43:23	84.719
05/08/02	00:44:23	83.980
05/08/02	00:45:23	83.354
05/08/02	00:46:23	84.719
05/08/02	00:47:23	83.582
05/08/02	00:48:23	84.321
05/08/02	00:49:23	84.236
05/08/02	00:50:23	83.667
05/08/02	00:51:23	85.402
05/08/02	00:52:23	83.894
05/08/02	00:53:23	84.776
05/08/02	00:54:23	84.861
05/08/02	00:55:23	84.492
05/08/02	00:56:23	85.259
05/08/02	00:57:23	83.923
05/08/02	00:58:23	85.003
05/08/02	00:59:23	84.890
05/08/02	01:00:23	84.691
05/08/02	01:01:23	84.691
05/08/02	01:02:23	85.032
05/08/02	01:03:23	85.259
05/08/02	01:04:23	85.430
05/08/02	01:05:23	85.515
05/08/02	01:06:23	85.913
05/08/02	01:07:23	85.003
05/08/02	01:08:23	85.174
05/08/02	01:09:23	85.402
05/08/02	01:10:23	85.515
05/08/02	01:11:23	85.174
05/08/02	01:12:23	84.548
05/08/02	01:13:23	84.947
05/08/02	01:14:23	85.117
05/08/02	01:15:23	85.487
05/08/02	01:16:23	85.288
05/08/02	01:17:23	85.800
05/08/02	01:18:23	85.771
05/08/02	01:19:23	84.890
05/08/02	01:20:23	84.947
05/08/02	01:21:23	85.828
05/08/02	01:22:23	84.947
05/08/02	01:23:23	85.686
05/08/02	01:24:23	85.402
05/08/02	01:25:23	85.572
05/08/02	01:26:23	85.117
05/08/02	01:27:23	85.117
05/08/02	01:28:23	85.259
05/08/02	01:29:23	83.923
05/08/02	01:30:23	85.601
05/08/02	01:31:23	84.492
05/08/02	01:32:23	85.515
05/08/02	01:33:23	84.463
05/08/02	01:34:23	84.236
05/08/02	01:35:23	85.259
05/08/02	01:36:23	85.089
05/08/02	01:37:23	85.032
05/08/02	01:38:23	85.203
05/08/02	01:39:23	84.093
05/08/02	01:40:23	85.117
05/08/02	01:41:23	84.548
05/08/02	01:42:23	84.947
05/08/02	01:43:23	84.634
05/08/02	01:44:23	84.691
05/08/02	01:45:23	84.321
05/08/02	01:46:23	84.804
05/08/02	01:47:23	69.874
05/08/02	01:48:23	74.083
05/08/02	01:49:23	75.277
05/08/02	01:50:23	86.141
05/08/02	01:51:23	84.008
05/08/02	01:52:23	82.927
05/08/02	01:53:23	85.430
05/08/02	01:54:23	83.809
05/08/02	01:55:23	84.605
05/08/02	01:56:23	84.548
05/08/02	01:57:23	83.752
05/08/02	01:58:23	84.150
05/08/02	01:59:23	85.032
05/08/02	02:00:23	84.548
05/08/02	02:01:23	84.406
05/08/02	02:02:23	84.093
05/08/02	02:03:23	84.150
05/08/02	02:04:23	82.416
05/08/02	02:05:23	83.610
05/08/02	02:06:23	84.378
05/08/02	02:07:23	83.667
05/08/02	02:08:23	85.003
05/08/02	02:09:23	84.150
05/08/02	02:10:23	83.354
05/08/02	02:11:23	84.093
05/08/02	02:12:23	83.923
05/08/02	02:13:23	83.724
05/08/02	02:14:23	84.378
05/08/02	02:15:23	84.008
05/08/02	02:16:23	84.321
05/08/02	02:17:23	83.724
05/08/02	02:18:23	83.610
05/08/02	02:19:23	84.008
05/08/02	02:20:23	83.439
05/08/02	02:21:23	84.321
05/08/02	02:22:23	83.439
05/08/02	02:23:23	83.809
05/08/02	02:24:23	83.610
05/08/02	02:25:23	83.809
05/08/02	02:26:23	84.378
05/08/02	02:27:23	85.003
05/08/02	02:28:23	84.691
05/08/02	02:29:23	84.008
05/08/02	02:30:23	84.321
05/08/02	02:31:23	84.719
05/08/02	02:32:23	85.003
05/08/02	02:33:23	83.980
05/08/02	02:34:23	84.207
05/08/02	02:35:23	86.056
05/08/02	02:36:23	84.150
05/08/02	02:37:23	85.288
05/08/02	02:38:23	84.861
05/08/02	02:39:23	85.003
05/08/02	02:40:23	84.890
05/08/02	02:41:23	84.947
05/08/02	02:42:23	84.236
05/08/02	02:43:23	84.634
05/08/02	02:44:23	84.861
05/08/02	02:45:23	84.236
05/08/02	02:46:23	84.548
05/08/02	02:47:23	84.321
05/08/02	02:48:23	68.765
05/08/02	02:49:23	71.723
05/08/02	02:50:23	75.562
05/08/02	02:51:23	75.391
05/08/02	02:52:23	76.017
05/08/02	02:53:23	76.358
05/08/02	02:54:23	75.676
05/08/02	02:55:23	76.187
05/08/02	02:56:23	76.330
05/08/02	02:57:23	75.875
05/08/02	02:58:23	75.533
05/08/02	02:59:23	87.648
05/08/02	03:00:23	85.089
05/08/02	03:01:23	83.126
05/08/02	03:02:23	85.345
05/08/02	03:03:23	83.610
05/08/02	03:04:23	84.605
05/08/02	03:05:23	84.463
05/08/02	03:06:23	84.634
05/08/02	03:07:23	84.548
05/08/02	03:08:23	83.894
05/08/02	03:09:23	84.150
05/08/02	03:10:23	84.406
05/08/02	03:11:23	84.321
05/08/02	03:12:23	84.065
05/08/02	03:13:23	83.894
05/08/02	03:14:23	84.719
05/08/02	03:15:23	85.203
05/08/02	03:16:23	84.719
05/08/02	03:17:23	83.923
05/08/02	03:18:23	84.406
05/08/02	03:19:23	84.776
05/08/02	03:20:23	84.207
05/08/02	03:21:23	84.634
05/08/02	03:22:23	83.724
05/08/02	03:23:23	83.667
05/08/02	03:24:23	83.496
05/08/02	03:25:23	83.183
05/08/02	03:26:23	83.724
05/08/02	03:27:23	84.065
05/08/02	03:28:23	83.980
05/08/02	03:29:23	88.928
05/08/02	03:30:23	82.927
05/08/02	03:31:23	85.259
05/08/02	03:32:23	85.003
05/08/02	03:33:23	84.776
05/08/02	03:34:23	83.667
05/08/02	03:35:23	85.487
05/08/02	03:36:23	85.174
05/08/02	03:37:23	84.861
05/08/02	03:38:23	85.174
05/08/02	03:39:23	85.203
05/08/02	03:40:23	84.378
05/08/02	03:41:23	83.894
05/08/02	03:42:23	86.312
05/08/02	03:43:23	85.259
05/08/02	03:44:23	85.288
05/08/02	03:45:23	84.321
05/08/02	03:46:23	85.572
05/08/02	03:47:23	84.804
05/08/02	03:48:23	84.634
05/08/02	03:49:23	84.292
05/08/02	03:50:23	84.463
05/08/02	03:51:23	84.634
05/08/02	03:52:23	83.809
05/08/02	03:53:23	84.691
05/08/02	03:54:23	84.236
05/08/02	03:55:23	84.861
05/08/02	03:56:23	84.691
05/08/02	03:57:23	84.236
05/08/02	03:58:23	84.492
05/08/02	03:59:23	84.463
05/08/02	04:00:23	84.548
05/08/02	04:01:23	84.150
05/08/02	04:02:23	85.515
05/08/02	04:03:23	84.804
05/08/02	04:04:23	85.032
05/08/02	04:05:23	85.345
05/08/02	04:06:23	84.605
05/08/02	04:07:23	84.776
05/08/02	04:08:23	85.288
05/08/02	04:09:23	84.719
05/08/02	04:10:23	85.117
05/08/02	04:11:23	84.406
05/08/02	04:12:23	85.003
05/08/02	04:13:23	85.515
05/08/02	04:14:23	85.345
05/08/02	04:15:23	85.089
05/08/02	04:16:23	85.174
05/08/02	04:17:23	85.259
05/08/02	04:18:23	84.861
05/08/02	04:19:23	83.496
05/08/02	04:20:23	85.487
05/08/02	04:21:23	84.947
05/08/02	04:22:23	84.776
05/08/02	04:23:23	84.463
05/08/02	04:24:23	85.174
05/08/02	04:25:23	85.003
05/08/02	04:26:23	85.174
05/08/02	04:27:23	68.936
05/08/02	04:28:23	75.704
05/08/02	04:29:23	74.339
05/08/02	04:30:23	86.681
05/08/02	04:31:23	83.126
05/08/02	04:32:23	82.302
05/08/02	04:33:23	83.610
05/08/02	04:34:23	82.074
05/08/02	04:35:23	81.904
05/08/02	04:36:23	82.416
05/08/02	04:37:23	82.387
05/08/02	04:38:23	81.136
05/08/02	04:39:23	81.363
05/08/02	04:40:23	82.160
05/08/02	04:41:23	82.017
05/08/02	04:42:23	82.472
05/08/02	04:43:23	81.619
05/08/02	04:44:23	81.847
05/08/02	04:45:23	82.017
05/08/02	04:46:23	82.785

LOCKWOOD AND MAGNOLIA - NO. 7156 cont.

Date	Time	Pres (PSI)
05/08/02	04:47:23	81.733
05/08/02	04:48:23	81.932
05/08/02	04:49:23	81.761
05/08/02	04:50:23	81.989
05/08/02	04:51:23	81.733
05/08/02	04:52:23	82.615
05/08/02	04:53:23	82.302
05/08/02	04:54:23	81.989
05/08/02	04:55:23	82.302
05/08/02	04:56:23	82.160
05/08/02	04:57:23	82.472
05/08/02	04:58:23	82.558
05/08/02	04:59:23	82.017
05/08/02	05:00:23	81.534
05/08/02	05:01:23	81.591
05/08/02	05:02:23	80.937
05/08/02	05:03:23	81.591
05/08/02	05:04:23	79.117
05/08/02	05:05:23	81.761
05/08/02	05:06:23	82.615
05/08/02	05:07:23	82.017
05/08/02	05:08:23	82.387
05/08/02	05:09:23	82.643
05/08/02	05:10:23	83.212
05/08/02	05:11:23	83.894
05/08/02	05:12:23	82.814
05/08/02	05:13:23	83.439
05/08/02	05:14:23	83.098
05/08/02	05:15:23	82.387
05/08/02	05:16:23	82.785
05/08/02	05:17:23	82.814
05/08/02	05:18:23	83.183
05/08/02	05:19:23	82.785
05/08/02	05:20:23	82.302
05/08/02	05:21:23	82.871
05/08/02	05:22:23	83.326
05/08/02	05:23:23	82.615
05/08/02	05:24:23	82.927
05/08/02	05:25:23	82.245
05/08/02	05:26:23	82.558
05/08/02	05:27:23	81.534
05/08/02	05:28:23	82.956
05/08/02	05:29:23	82.956
05/08/02	05:30:23	81.591
05/08/02	05:31:23	82.330
05/08/02	05:32:23	82.245
05/08/02	05:33:23	79.429
05/08/02	05:34:23	80.880
05/08/02	05:35:23	78.633
05/08/02	05:36:23	79.600
05/08/02	05:37:23	79.629
05/08/02	05:38:23	78.747
05/08/02	05:39:23	79.458
05/08/02	05:40:23	80.539
05/08/02	05:41:23	80.425
05/08/02	05:42:23	80.169
05/08/02	05:43:23	80.652
05/08/02	05:44:23	80.709
05/08/02	05:45:23	80.738
05/08/02	05:46:23	80.226
05/08/02	05:47:23	80.425
05/08/02	05:48:23	80.738
05/08/02	05:49:23	81.534
05/08/02	05:50:23	86.141
05/08/02	05:51:23	81.847
05/08/02	05:52:23	82.643
05/08/02	05:53:23	85.913
05/08/02	05:54:23	83.126
05/08/02	05:55:23	84.861
05/08/02	05:56:23	83.837
05/08/02	05:57:23	84.150
05/08/02	05:58:23	84.463
05/08/02	05:59:23	83.752
05/08/02	06:00:23	84.463
05/08/02	06:01:23	84.378
05/08/02	06:02:23	84.634
05/08/02	06:03:23	83.667
05/08/02	06:04:23	84.236
05/08/02	06:05:23	83.212
05/08/02	06:06:23	84.947
05/08/02	06:07:23	84.008
05/08/02	06:08:23	84.548
05/08/02	06:09:23	83.752
05/08/02	06:10:23	84.008
05/08/02	06:11:23	83.496
05/08/02	06:12:23	84.065
05/08/02	06:13:23	84.150
05/08/02	06:14:23	83.582
05/08/02	06:15:23	84.150
05/08/02	06:16:23	83.667
05/08/02	06:17:23	83.667
05/08/02	06:18:23	84.093
05/08/02	06:19:23	83.837
05/08/02	06:20:23	83.610
05/08/02	06:21:23	83.894
05/08/02	06:22:23	84.406
05/08/02	06:23:23	83.041
05/08/02	06:24:23	84.236
05/08/02	06:25:23	84.150
05/08/02	06:26:23	85.003
05/08/02	06:27:23	83.354
05/08/02	06:28:23	82.558
05/08/02	06:29:23	83.354
05/08/02	06:30:23	83.354
05/08/02	06:31:23	80.937
05/08/02	06:32:23	82.472
05/08/02	06:33:23	82.700
05/08/02	06:34:23	81.335
05/08/02	06:35:23	82.472
05/08/02	06:36:23	83.269
05/08/02	06:37:23	82.387
05/08/02	06:38:23	82.643
05/08/02	06:39:23	81.449
05/08/02	06:40:23	82.416
05/08/02	06:41:23	81.619
05/08/02	06:42:23	81.591
05/08/02	06:43:23	82.416
05/08/02	06:44:23	81.221
05/08/02	06:45:23	81.676
05/08/02	06:46:23	81.761
05/08/02	06:47:23	82.245
05/08/02	06:48:23	81.619
05/08/02	06:49:23	81.932
05/08/02	06:50:23	82.472
05/08/02	06:51:23	82.330
05/08/02	06:52:23	82.472
05/08/02	06:53:23	82.700
05/08/02	06:54:23	81.676
05/08/02	06:55:23	82.131
05/08/02	06:56:23	81.733
05/08/02	06:57:23	82.330
05/08/02	06:58:23	81.904
05/08/02	06:59:23	80.567
05/08/02	07:00:23	82.472
05/08/02	07:01:23	81.022
05/08/02	07:02:23	82.615
05/08/02	07:03:23	81.420
05/08/02	07:04:23	82.927
05/08/02	07:05:23	81.420
05/08/02	07:06:23	82.927
05/08/02	07:07:23	81.847
05/08/02	07:08:23	81.733
05/08/02	07:09:23	81.022
05/08/02	07:10:23	81.847
05/08/02	07:11:23	81.591
05/08/02	07:12:23	82.785
05/08/02	07:13:23	81.733
05/08/02	07:14:23	81.449
05/08/02	07:15:23	82.216
05/08/02	07:16:23	80.937
05/08/02	07:17:23	83.411
05/08/02	07:18:23	83.923
05/08/02	07:19:23	81.932
05/08/02	07:20:23	83.183
05/08/02	07:21:23	81.534
05/08/02	07:22:23	81.932
05/08/02	07:23:23	80.567
05/08/02	07:24:23	81.904
05/08/02	07:25:23	81.733
05/08/02	07:26:23	81.107
05/08/02	07:27:23	81.818
05/08/02	07:28:23	84.150
05/08/02	07:29:23	82.245
05/08/02	07:30:23	82.814
05/08/02	07:31:23	80.880
05/08/02	07:32:23	81.136
05/08/02	07:33:23	80.823
05/08/02	07:34:23	81.335
05/08/02	07:35:23	82.387
05/08/02	07:36:23	81.193
05/08/02	07:37:23	81.733
05/08/02	07:38:23	79.031
05/08/02	07:39:23	82.558
05/08/02	07:40:23	81.534
05/08/02	07:41:23	79.259
05/08/02	07:42:23	80.311
05/08/02	07:43:23	79.913
05/08/02	07:44:23	80.084
05/08/02	07:45:23	79.856
05/08/02	07:46:23	78.974
05/08/02	07:47:23	80.169
05/08/02	07:48:23	78.349
05/08/02	07:49:23	78.349
05/08/02	07:50:23	78.718
05/08/02	07:51:23	79.287
05/08/02	07:52:23	80.027
05/08/02	07:53:23	79.600
05/08/02	07:54:23	78.491
05/08/02	07:55:23	78.861
05/08/02	07:56:23	78.349
05/08/02	07:57:23	78.064
05/08/02	07:58:23	79.913
05/08/02	07:59:23	79.060
05/08/02	08:00:23	78.889
05/08/02	08:01:23	78.235
05/08/02	08:02:23	78.718
05/08/02	08:03:23	78.804
05/08/02	08:04:23	78.946
05/08/02	08:05:23	79.344
05/08/02	08:06:23	80.226
05/08/02	08:07:23	79.515
05/08/02	08:08:23	77.268
05/08/02	08:09:23	80.965
05/08/02	08:10:23	80.084
05/08/02	08:11:23	78.804
05/08/02	08:12:23	79.344
05/08/02	08:13:23	81.420
05/08/02	08:14:23	80.795
05/08/02	08:15:23	80.027
05/08/02	08:16:23	80.738
05/08/02	08:17:23	80.823
05/08/02	08:18:23	80.254
05/08/02	08:19:23	80.084
05/08/02	08:20:23	80.937
05/08/02	08:21:23	80.937
05/08/02	08:22:23	80.937
05/08/02	08:23:23	81.107
05/08/02	08:24:23	82.871
05/08/02	08:25:23	82.017
05/08/02	08:26:23	81.932
05/08/02	08:27:23	81.989
05/08/02	08:28:23	82.615
05/08/02	08:29:23	80.937
05/08/02	08:30:23	81.022
05/08/02	08:31:23	81.505
05/08/02	08:32:23	81.761
05/08/02	08:33:23	80.169
05/08/02	08:34:23	77.041
05/08/02	08:35:23	77.666
05/08/02	08:36:23	77.211
05/08/02	08:37:23	82.017
05/08/02	08:38:23	77.154
05/08/02	08:39:23	78.349
05/08/02	08:40:23	79.117
05/08/02	08:41:23	78.747
05/08/02	08:42:23	81.221
05/08/02	08:43:23	79.259
05/08/02	08:44:23	78.491
05/08/02	08:45:23	78.633
05/08/02	08:46:23	79.287
05/08/02	08:47:23	77.865
05/08/02	08:48:23	76.728
05/08/02	08:49:23	76.330
05/08/02	08:50:23	78.576
05/08/02	08:51:23	76.955
05/08/02	08:52:23	79.685
05/08/02	08:53:23	79.941
05/08/02	08:54:23	79.373
05/08/02	08:55:23	62.366
05/08/02	08:56:23	64.755
05/08/02	08:57:23	65.750
05/08/02	08:58:23	64.073
05/08/02	08:59:23	63.276
05/08/02	09:00:23	63.817
05/08/02	09:01:23	79.060
05/08/02	09:02:23	81.363
05/08/02	09:03:23	77.553
05/08/02	09:04:23	78.178
05/08/02	09:05:23	78.576
05/08/02	09:06:23	78.235
05/08/02	09:07:23	79.060
05/08/02	09:08:23	78.093
05/08/02	09:09:23	77.922
05/08/02	09:10:23	77.126

LOCKWOOD AND MAGNOLIA - NO. 7156 cont.

Date	Time	Pres (PSI)	Date	Time	Pres (PSI)	Date	Time	Pres (PSI)	Date	Time	Pres (PSI)
05/08/02	09:11:23	76.557	05/08/02	10:17:23	79.031	05/08/02	11:23:23	76.187	05/08/02	12:29:23	78.406
05/08/02	09:12:23	77.666	05/08/02	10:18:23	77.752	05/08/02	11:24:23	78.349	05/08/02	12:30:23	77.126
05/08/02	09:13:23	78.064	05/08/02	10:19:23	77.297	05/08/02	11:25:23	72.092	05/08/02	12:31:23	79.828
05/08/02	09:14:23	78.064	05/08/02	10:20:23	78.064	05/08/02	11:26:23	77.922	05/08/02	12:32:23	77.865
05/08/02	09:15:23	76.586	05/08/02	10:21:23	78.946	05/08/02	11:27:23	75.192	05/08/02	12:33:23	77.268
05/08/02	09:16:23	78.463	05/08/02	10:22:23	78.406	05/08/02	11:28:23	75.448	05/08/02	12:34:23	78.946
05/08/02	09:17:23	77.951	05/08/02	10:23:23	77.268	05/08/02	11:29:23	75.078	05/08/02	12:35:23	77.439
05/08/02	09:18:23	74.254	05/08/02	10:24:23	78.463	05/08/02	11:30:23	80.539	05/08/02	12:36:23	76.586
05/08/02	09:19:23	74.822	05/08/02	10:25:23	79.031	05/08/02	11:31:23	77.553	05/08/02	12:37:23	77.865
05/08/02	09:20:23	75.619	05/08/02	10:26:23	79.515	05/08/02	11:32:23	58.157	05/08/02	12:38:23	77.752
05/08/02	09:21:23	75.277	05/08/02	10:27:23	78.093	05/08/02	11:33:23	43.398	05/08/02	12:39:23	76.955
05/08/02	09:22:23	75.277	05/08/02	10:28:23	78.491	05/08/02	11:34:23	32.022	05/08/02	12:40:23	80.027
05/08/02	09:23:23	74.111	05/08/02	10:29:23	78.008	05/08/02	11:35:23	36.999	05/08/02	12:41:23	78.804
05/08/02	09:24:23	75.761	05/08/02	10:30:23	77.837	05/08/02	11:36:23	39.359	05/08/02	12:42:23	78.747
05/08/02	09:25:23	72.291	05/08/02	10:31:23	79.373	05/08/02	11:37:23	37.909	05/08/02	12:43:23	77.069
05/08/02	09:26:23	73.799	05/08/02	10:32:23	78.548	05/08/02	11:38:23	38.449	05/08/02	12:44:23	76.984
05/08/02	09:27:23	74.282	05/08/02	10:33:23	77.524	05/08/02	11:39:23	38.392	05/08/02	12:45:23	76.074
05/08/02	09:28:23	77.268	05/08/02	10:34:23	77.609	05/08/02	11:40:23	39.075	05/08/02	12:46:23	76.671
05/08/02	09:29:23	74.652	05/08/02	10:35:23	77.126	05/08/02	11:41:23	38.051	05/08/02	12:47:23	76.756
05/08/02	09:30:23	75.931	05/08/02	10:36:23	77.609	05/08/02	11:42:23	37.966	05/08/02	12:48:23	45.474
05/08/02	09:31:23	78.008	05/08/02	10:37:23	68.537	05/08/02	11:43:23	37.767	05/08/02	12:49:23	42.288
05/08/02	09:32:23	76.102	05/08/02	10:38:23	60.859	05/08/02	11:44:23	37.283	05/08/02	12:50:23	55.114
05/08/02	09:33:23	75.676	05/08/02	10:39:23	61.001	05/08/02	11:45:23	36.714	05/08/02	12:51:23	63.561
05/08/02	09:34:23	86.056	05/08/02	10:40:23	61.257	05/08/02	11:46:23	36.487	05/08/02	12:52:23	80.140
05/08/02	09:35:23	77.951	05/08/02	10:41:23	61.200	05/08/02	11:47:23	37.198	05/08/02	12:53:23	83.354
05/08/02	09:36:23	78.064	05/08/02	10:42:23	62.622	05/08/02	11:48:23	36.714	05/08/02	12:54:23	79.600
05/08/02	09:37:23	78.662	05/08/02	10:43:23	62.594	05/08/02	11:49:23	36.089	05/08/02	12:55:23	76.813
05/08/02	09:38:23	78.093	05/08/02	10:44:23	62.679	05/08/02	11:50:23	36.060	05/08/02	12:56:23	76.870
05/08/02	09:39:23	79.429	05/08/02	10:45:23	62.764	05/08/02	11:51:23	36.999	05/08/02	12:57:23	78.150
05/08/02	09:40:23	79.344	05/08/02	10:46:23	62.679	05/08/02	11:52:23	37.113	05/08/02	12:58:23	76.159
05/08/02	09:41:23	79.458	05/08/02	10:47:23	60.489	05/08/02	11:53:23	37.767	05/08/02	12:59:23	77.922
05/08/02	09:42:23	79.998	05/08/02	10:48:23	59.665	05/08/02	11:54:23	42.687	05/08/02	13:00:23	75.789
05/08/02	09:43:23	79.031	05/08/02	10:49:23	60.404	05/08/02	11:55:23	45.815	05/08/02	13:01:23	77.780
05/08/02	09:44:23	78.548	05/08/02	10:50:23	59.181	05/08/02	11:56:23	48.261	05/08/02	13:02:23	76.159
05/08/02	09:45:23	78.576	05/08/02	10:51:23	59.835	05/08/02	11:57:23	50.820	05/08/02	13:03:23	76.984
05/08/02	09:46:23	77.353	05/08/02	10:52:23	58.897	05/08/02	11:58:23	54.745	05/08/02	13:04:23	78.093
05/08/02	09:47:23	80.482	05/08/02	10:53:23	59.209	05/08/02	11:59:23	65.807	05/08/02	13:05:23	76.671
05/08/02	09:48:23	77.353	05/08/02	10:54:23	60.859	05/08/02	12:00:23	70.215	05/08/02	13:06:23	77.752
05/08/02	09:49:23	78.576	05/08/02	10:55:23	69.419	05/08/02	12:01:23	77.553	05/08/02	13:07:23	76.984
05/08/02	09:50:23	79.145	05/08/02	10:56:23	81.932	05/08/02	12:02:23	75.875	05/08/02	13:08:23	78.093
05/08/02	09:51:23	75.391	05/08/02	10:57:23	78.718	05/08/02	12:03:23	76.273	05/08/02	13:09:23	76.273
05/08/02	09:52:23	66.518	05/08/02	10:58:23	78.463	05/08/02	12:04:23	75.562	05/08/02	13:10:23	77.382
05/08/02	09:53:23	68.225	05/08/02	10:59:23	76.472	05/08/02	12:05:23	78.263	05/08/02	13:11:23	76.330
05/08/02	09:54:23	69.305	05/08/02	11:00:23	78.804	05/08/02	12:06:23	77.922	05/08/02	13:12:23	77.837
05/08/02	09:55:23	69.305	05/08/02	11:01:23	76.955	05/08/02	12:07:23	76.244	05/08/02	13:13:23	76.358
05/08/02	09:56:23	68.623	05/08/02	11:02:23	77.837	05/08/02	12:08:23	76.955	05/08/02	13:14:23	77.069
05/08/02	09:57:23	68.623	05/08/02	11:03:23	77.553	05/08/02	12:09:23	77.780	05/08/02	13:15:23	77.268
05/08/02	09:58:23	69.391	05/08/02	11:04:23	78.491	05/08/02	12:10:23	77.609	05/08/02	13:16:23	77.467
05/08/02	09:59:23	68.281	05/08/02	11:05:23	77.126	05/08/02	12:11:23	75.277	05/08/02	13:17:23	77.695
05/08/02	10:00:23	66.689	05/08/02	11:06:23	78.491	05/08/02	12:12:23	77.951	05/08/02	13:18:23	76.955
05/08/02	10:01:23	67.343	05/08/02	11:07:23	77.382	05/08/02	12:13:23	77.666	05/08/02	13:19:23	77.553
05/08/02	10:02:23	67.741	05/08/02	11:08:23	78.064	05/08/02	12:14:23	77.865	05/08/02	13:20:23	76.159
05/08/02	10:03:23	67.883	05/08/02	11:09:23	76.159	05/08/02	12:15:23	78.349	05/08/02	13:21:23	76.955
05/08/02	10:04:23	66.291	05/08/02	11:10:23	77.553	05/08/02	12:16:23	77.780	05/08/02	13:22:23	76.642
05/08/02	10:05:23	68.225	05/08/02	11:11:23	77.211	05/08/02	12:17:23	78.093	05/08/02	13:23:23	77.382
05/08/02	10:06:23	69.959	05/08/02	11:12:23	76.500	05/08/02	12:18:23	77.268	05/08/02	13:24:23	75.846
05/08/02	10:07:23	69.533	05/08/02	11:13:23	77.154	05/08/02	12:19:23	78.548	05/08/02	13:25:23	75.135
05/08/02	10:08:23	70.357	05/08/02	11:14:23	77.695	05/08/02	12:20:23	79.031	05/08/02	13:26:23	76.017
05/08/02	10:09:23	70.443	05/08/02	11:15:23	77.609	05/08/02	12:21:23	78.263	05/08/02	13:27:23	75.960
05/08/02	10:10:23	69.647	05/08/02	11:16:23	77.467	05/08/02	12:22:23	76.671	05/08/02	13:28:23	76.273
05/08/02	10:11:23	70.102	05/08/02	11:17:23	77.752	05/08/02	12:23:23	78.548	05/08/02	13:29:23	76.358
05/08/02	10:12:23	68.736	05/08/02	11:18:23	77.297	05/08/02	12:24:23	79.344	05/08/02	13:30:23	76.955
05/08/02	10:13:23	70.357	05/08/02	11:19:23	77.837	05/08/02	12:25:23	78.463	05/08/02	13:31:23	77.951
05/08/02	10:14:23	71.950	05/08/02	11:20:23	77.467	05/08/02	12:26:23	76.017	05/08/02	13:32:23	74.510
05/08/02	10:15:23	83.980	05/08/02	11:21:23	78.946	05/08/02	12:27:23	79.771	05/08/02	13:33:23	74.680
05/08/02	10:16:23	75.448	05/08/02	11:22:23	79.117	05/08/02	12:28:23	78.662	05/08/02	13:34:23	71.865

LOCKWOOD AND MAGNOLIA - NO. 7156 cont.

Date	Time	Pres (PSI)	Date	Time	Pres (PSI)	Date	Time	Pres (PSI)	Date	Time	Pres (PSI)
05/08/02	13:35:23	73.287	05/08/02	14:41:23	76.642						
05/08/02	13:36:23	73.287	05/08/02	14:42:23	77.353						
05/08/02	13:37:23	73.770									
05/08/02	13:38:23	74.026									
05/08/02	13:39:23	73.400									
05/08/02	13:40:23	74.111									
05/08/02	13:41:23	74.111									
05/08/02	13:42:23	74.282									
05/08/02	13:43:23	73.230									
05/08/02	13:44:23	73.998									
05/08/02	13:45:23	73.315									
05/08/02	13:46:23	74.652									
05/08/02	13:47:23	73.457									
05/08/02	13:48:23	75.448									
05/08/02	13:49:23	77.211									
05/08/02	13:50:23	74.794									
05/08/02	13:51:23	74.652									
05/08/02	13:52:23	74.908									
05/08/02	13:53:23	75.306									
05/08/02	13:54:23	74.965									
05/08/02	13:55:23	78.974									
05/08/02	13:56:23	76.557									
05/08/02	13:57:23	78.946									
05/08/02	13:58:23	77.666									
05/08/02	13:59:23	77.126									
05/08/02	14:00:23	76.642									
05/08/02	14:01:23	77.666									
05/08/02	14:02:23	77.353									
05/08/02	14:03:23	75.789									
05/08/02	14:04:23	77.780									
05/08/02	14:05:23	76.898									
05/08/02	14:06:23	77.666									
05/08/02	14:07:23	76.557									
05/08/02	14:08:23	77.609									
05/08/02	14:09:23	77.609									
05/08/02	14:10:23	78.008									
05/08/02	14:11:23	77.553									
05/08/02	14:12:23	76.955									
05/08/02	14:13:23	79.117									
05/08/02	14:14:23	75.277									
05/08/02	14:15:23	73.799									
05/08/02	14:16:23	75.562									
05/08/02	14:17:23	75.875									
05/08/02	14:18:23	77.467									
05/08/02	14:19:23	75.277									
05/08/02	14:20:23	78.633									
05/08/02	14:21:23	78.491									
05/08/02	14:22:23	77.695									
05/08/02	14:23:23	76.898									
05/08/02	14:24:23	77.780									
05/08/02	14:25:23	77.553									
05/08/02	14:26:23	76.955									
05/08/02	14:27:23	79.828									
05/08/02	14:28:23	77.922									
05/08/02	14:29:23	78.491									
05/08/02	14:30:23	77.467									
05/08/02	14:31:23	75.676									
05/08/02	14:32:23	77.154									
05/08/02	14:33:23	76.671									
05/08/02	14:34:23	78.064									
05/08/02	14:35:23	76.472									
05/08/02	14:36:23	77.524									
05/08/02	14:37:23	77.439									
05/08/02	14:38:23	75.761									
05/08/02	14:39:23	76.187									
05/08/02	14:40:23	76.358									

M. L. KING AND MITCHELL - NO. 7282

Date	Time	Pres (PSI)
07/22/02	07:57:06	-0.085
07/22/02	07:58:06	-0.142
07/22/02	07:59:06	-0.142
07/22/02	08:00:06	-0.142
07/22/02	08:01:06	-0.142
07/22/02	08:02:06	-0.085
07/22/02	08:03:06	-0.142
07/22/02	08:04:06	-0.142
07/22/02	08:05:06	-0.142
07/22/02	08:06:06	-0.142
07/22/02	08:07:06	-0.142
07/22/02	08:08:06	-0.085
07/22/02	08:09:06	-0.142
07/22/02	08:10:06	-0.142
07/22/02	08:11:06	-0.085
07/22/02	08:12:06	-0.142
07/22/02	08:13:06	-0.085
07/22/02	08:14:06	-0.085
07/22/02	08:15:06	-0.085
07/22/02	08:16:06	-0.142
07/22/02	08:17:06	-0.142
07/22/02	08:18:06	-0.142
07/22/02	08:19:06	-0.142
07/22/02	08:20:06	-0.142
07/22/02	08:21:06	-0.142
07/22/02	08:22:06	-0.142
07/22/02	08:23:06	-0.142
07/22/02	08:24:06	-0.142
07/22/02	08:25:06	-0.085
07/22/02	08:26:06	-0.142
07/22/02	08:27:06	-0.085
07/22/02	08:28:06	-0.142
07/22/02	08:29:06	-0.142
07/22/02	08:30:06	-0.142
07/22/02	08:31:06	-0.142
07/22/02	08:32:06	-0.142
07/22/02	08:33:06	-0.085
07/22/02	08:34:06	-0.142
07/22/02	08:35:06	-0.142
07/22/02	08:36:06	-0.085
07/22/02	08:37:06	-0.085
07/22/02	08:38:06	-0.142
07/22/02	08:39:06	-0.142
07/22/02	08:40:06	75.875
07/22/02	08:41:06	74.595
07/22/02	08:42:06	76.728
07/22/02	08:43:06	75.420
07/22/02	08:44:06	74.453
07/22/02	08:45:06	74.140
07/22/02	08:46:06	73.855
07/22/02	08:47:06	74.310
07/22/02	08:48:06	70.955
07/22/02	08:49:06	84.492
07/22/02	08:50:06	83.525
07/22/02	08:51:06	82.728
07/22/02	08:52:06	82.160
07/22/02	08:53:06	83.923
07/22/02	08:54:06	84.548
07/22/02	08:55:06	86.425
07/22/02	08:56:06	85.857
07/22/02	08:57:06	85.572
07/22/02	08:58:06	85.800
07/22/02	08:59:06	85.970
07/22/02	09:00:06	84.292
07/22/02	09:01:06	84.236
07/22/02	09:02:06	85.601
07/22/02	09:03:06	84.890
07/22/02	09:04:06	85.970
07/22/02	09:05:06	86.113
07/22/02	09:06:06	85.146
07/22/02	09:07:06	85.572
07/22/02	09:08:06	85.203
07/22/02	09:09:06	85.402
07/22/02	09:10:06	84.179
07/22/02	09:11:06	85.146
07/22/02	09:12:06	85.402
07/22/02	09:13:06	80.396
07/22/02	09:14:06	81.392
07/22/02	09:15:06	83.439
07/22/02	09:16:06	81.818
07/22/02	09:17:06	88.644
07/22/02	09:18:06	82.984
07/22/02	09:19:06	84.037
07/22/02	09:20:06	82.615
07/22/02	09:21:06	83.525
07/22/02	09:22:06	84.492
07/22/02	09:23:06	85.800
07/22/02	09:24:06	85.402
07/22/02	09:25:06	83.582
07/22/02	09:26:06	83.638
07/22/02	09:27:06	84.093
07/22/02	09:28:06	84.093
07/22/02	09:29:06	84.634
07/22/02	09:30:06	84.150
07/22/02	09:31:06	84.748
07/22/02	09:32:06	84.691
07/22/02	09:33:06	84.292
07/22/02	09:34:06	84.691
07/22/02	09:35:06	84.605
07/22/02	09:36:06	83.724
07/22/02	09:37:06	80.595
07/22/02	09:38:06	82.359
07/22/02	09:39:06	82.103
07/22/02	09:40:06	84.349
07/22/02	09:41:06	83.013
07/22/02	09:42:06	83.240
07/22/02	09:43:06	83.382
07/22/02	09:44:06	85.458
07/22/02	09:45:06	84.292
07/22/02	09:46:06	84.349
07/22/02	09:47:06	84.748
07/22/02	09:48:06	83.923
07/22/02	09:49:06	84.349
07/22/02	09:50:06	84.492
07/22/02	09:51:06	84.492
07/22/02	09:52:06	84.492
07/22/02	09:53:06	83.439
07/22/02	09:54:06	83.126
07/22/02	09:55:06	83.724
07/22/02	09:56:06	80.994
07/22/02	09:57:06	82.359
07/22/02	09:58:06	81.904
07/22/02	09:59:06	82.529
07/22/02	10:00:06	82.728
07/22/02	10:01:06	83.724
07/22/02	10:02:06	83.240
07/22/02	10:03:06	81.761
07/22/02	10:04:06	82.927
07/22/02	10:05:06	82.273
07/22/02	10:06:06	82.728
07/22/02	10:07:06	82.472
07/22/02	10:08:06	82.728
07/22/02	10:09:06	84.179
07/22/02	10:10:06	82.728
07/22/02	10:11:06	82.472
07/22/02	10:12:06	82.359
07/22/02	10:13:06	82.728
07/22/02	10:14:06	81.961
07/22/02	10:15:06	81.904
07/22/02	10:16:06	83.638
07/22/02	10:17:06	81.306
07/22/02	10:18:06	82.160
07/22/02	10:19:06	82.416
07/22/02	10:20:06	82.927
07/22/02	10:21:06	83.582
07/22/02	10:22:06	82.529
07/22/02	10:23:06	81.591
07/22/02	10:24:06	83.382
07/22/02	10:25:06	82.927
07/22/02	10:26:06	83.638
07/22/02	10:27:06	82.927
07/22/02	10:28:06	83.326
07/22/02	10:29:06	82.302
07/22/02	10:30:06	83.382
07/22/02	10:31:06	82.671
07/22/02	10:32:06	82.984
07/22/02	10:33:06	82.927
07/22/02	10:34:06	82.074
07/22/02	10:35:06	83.070
07/22/02	10:36:06	81.818
07/22/02	10:37:06	82.273
07/22/02	10:38:06	80.084
07/22/02	10:39:06	82.984
07/22/02	10:40:06	83.894
07/22/02	10:41:06	82.160
07/22/02	10:42:06	83.695
07/22/02	10:43:06	82.728
07/22/02	10:44:06	83.269
07/22/02	10:45:06	81.761
07/22/02	10:46:06	81.961
07/22/02	10:47:06	83.013
07/22/02	10:48:06	81.705
07/22/02	10:49:06	82.814
07/22/02	10:50:06	84.179
07/22/02	10:51:06	83.326
07/22/02	10:52:06	83.126
07/22/02	10:53:06	82.927
07/22/02	10:54:06	83.013
07/22/02	10:55:06	82.359
07/22/02	10:56:06	83.240
07/22/02	10:57:06	83.126
07/22/02	10:58:06	82.871
07/22/02	10:59:06	83.326
07/22/02	11:00:06	82.814
07/22/02	11:01:06	82.529
07/22/02	11:02:06	83.525
07/22/02	11:03:06	79.771
07/22/02	11:04:06	82.814
07/22/02	11:05:06	81.050
07/22/02	11:06:06	81.136
07/22/02	11:07:06	78.861
07/22/02	11:08:06	82.273
07/22/02	11:09:06	81.306
07/22/02	11:10:06	82.728
07/22/02	11:11:06	81.904
07/22/02	11:12:06	81.961
07/22/02	11:13:06	82.871
07/22/02	11:14:06	81.818
07/22/02	11:15:06	82.671
07/22/02	11:16:06	83.326
07/22/02	11:17:06	81.847
07/22/02	11:18:06	83.240
07/22/02	11:19:06	81.761
07/22/02	11:20:06	82.103
07/22/02	11:21:06	82.416
07/22/02	11:22:06	81.904
07/22/02	11:23:06	81.904
07/22/02	11:24:06	81.449
07/22/02	11:25:06	82.529
07/22/02	11:26:06	84.804
07/22/02	11:27:06	83.070
07/22/02	11:28:06	83.183
07/22/02	11:29:06	83.638
07/22/02	11:30:06	84.406
07/22/02	11:31:06	83.695
07/22/02	11:32:06	83.240
07/22/02	11:33:06	83.240
07/22/02	11:34:06	83.582
07/22/02	11:35:06	84.548
07/22/02	11:36:06	83.781
07/22/02	11:37:06	83.269
07/22/02	11:38:06	85.146
07/22/02	11:39:06	83.923
07/22/02	11:40:06	83.638
07/22/02	11:41:06	84.890
07/22/02	11:42:06	85.970
07/22/02	11:43:06	85.658
07/22/02	11:44:06	84.037
07/22/02	11:45:06	85.345
07/22/02	11:46:06	84.179
07/22/02	11:47:06	85.515
07/22/02	11:48:06	85.458
07/22/02	11:49:06	86.624
07/22/02	11:50:06	86.482
07/22/02	11:51:06	84.406
07/22/02	11:52:06	86.624
07/22/02	11:53:06	86.169
07/22/02	11:54:06	84.947
07/22/02	11:55:06	85.402
07/22/02	11:56:06	85.316
07/22/02	11:57:06	85.857
07/22/02	11:58:06	85.060
07/22/02	11:59:06	85.345
07/22/02	12:00:06	85.714
07/22/02	12:01:06	86.425
07/22/02	12:02:06	85.601
07/22/02	12:03:06	86.027
07/22/02	12:04:06	85.515
07/22/02	12:05:06	85.970
07/22/02	12:06:06	85.970
07/22/02	12:07:06	85.572
07/22/02	12:08:06	86.169
07/22/02	12:09:06	86.113
07/22/02	12:10:06	84.349
07/22/02	12:11:06	84.292
07/22/02	12:12:06	85.402
07/22/02	12:13:06	84.093
07/22/02	12:14:06	82.984
07/22/02	12:15:06	82.273
07/22/02	12:16:06	83.468
07/22/02	12:17:06	82.814
07/22/02	12:18:06	81.904
07/22/02	12:19:06	82.814
07/22/02	12:20:06	85.060

M. L. KING AND MITCHELL - NO. 7282 cont.

Date	Time	Pres (PSI)
07/22/02	12:21:06	84.804
07/22/02	12:22:06	85.259
07/22/02	12:23:06	84.236
07/22/02	12:24:06	85.515
07/22/02	12:25:06	85.572
07/22/02	12:26:06	84.605
07/22/02	12:27:06	85.003
07/22/02	12:28:06	85.146
07/22/02	12:29:06	85.345
07/22/02	12:30:06	85.714
07/22/02	12:31:06	86.226
07/22/02	12:32:06	85.857
07/22/02	12:33:06	85.857
07/22/02	12:34:06	84.890
07/22/02	12:35:06	86.511
07/22/02	12:36:06	85.003
07/22/02	12:37:06	85.259
07/22/02	12:38:06	86.312
07/22/02	12:39:06	85.316
07/22/02	12:40:06	85.601
07/22/02	12:41:06	85.345
07/22/02	12:42:06	85.800
07/22/02	12:43:06	85.146
07/22/02	12:44:06	86.482
07/22/02	12:45:06	85.402
07/22/02	12:46:06	86.255
07/22/02	12:47:06	85.089
07/22/02	12:48:06	86.255
07/22/02	12:49:06	85.515
07/22/02	12:50:06	86.482
07/22/02	12:51:06	85.458
07/22/02	12:52:06	86.482
07/22/02	12:53:06	86.027
07/22/02	12:54:06	85.316
07/22/02	12:55:06	85.203
07/22/02	12:56:06	85.771
07/22/02	12:57:06	84.179
07/22/02	12:58:06	85.060
07/22/02	12:59:06	84.037
07/22/02	13:00:06	83.468
07/22/02	13:01:06	83.013
07/22/02	13:02:06	83.638
07/22/02	13:03:06	82.472
07/22/02	13:04:06	85.771
07/22/02	13:05:06	86.767
07/22/02	13:06:06	85.345
07/22/02	13:07:06	86.226
07/22/02	13:08:06	85.800
07/22/02	13:09:06	85.913
07/22/02	13:10:06	86.113
07/22/02	13:11:06	85.857
07/22/02	13:12:06	85.203
07/22/02	13:13:06	84.804
07/22/02	13:14:06	85.913
07/22/02	13:15:06	82.216
07/22/02	13:16:06	83.894
07/22/02	13:17:06	82.160
07/22/02	13:18:06	83.923
07/22/02	13:19:06	83.382
07/22/02	13:20:06	84.179
07/22/02	13:21:06	85.771
07/22/02	13:22:06	85.402
07/22/02	13:23:06	84.890
07/22/02	13:24:06	85.146
07/22/02	13:25:06	85.913
07/22/02	13:26:06	85.800
07/22/02	13:27:06	84.947
07/22/02	13:28:06	85.857
07/22/02	13:29:06	83.439
07/22/02	13:30:06	85.259
07/22/02	13:31:06	85.970
07/22/02	13:32:06	84.748
07/22/02	13:33:06	85.259
07/22/02	13:34:06	86.113
07/22/02	13:35:06	85.515
07/22/02	13:36:06	85.572
07/22/02	13:37:06	86.937
07/22/02	13:38:06	85.771
07/22/02	13:39:06	86.027
07/22/02	13:40:06	85.003
07/22/02	13:41:06	84.349
07/22/02	13:42:06	84.748
07/22/02	13:43:06	84.634
07/22/02	13:44:06	84.492
07/22/02	13:45:06	83.382
07/22/02	13:46:06	82.529
07/22/02	13:47:06	86.880
07/22/02	13:48:06	84.804
07/22/02	13:49:06	84.037
07/22/02	13:50:06	84.406
07/22/02	13:51:06	85.601
07/22/02	13:52:06	86.369
07/22/02	13:53:06	86.113
07/22/02	13:54:06	82.927
07/22/02	13:55:06	83.781
07/22/02	13:56:06	82.814
07/22/02	13:57:06	83.695
07/22/02	13:58:06	83.183
07/22/02	13:59:06	83.695
07/22/02	14:00:06	86.767
07/22/02	14:01:06	85.970
07/22/02	14:02:06	85.601
07/22/02	14:03:06	84.861
07/22/02	14:04:06	86.369
07/22/02	14:05:06	86.027
07/22/02	14:06:06	72.746
07/22/02	14:07:06	74.396
07/22/02	14:08:06	75.875
07/22/02	14:09:06	75.306
07/22/02	14:10:06	74.908
07/22/02	14:11:06	80.795
07/22/02	14:12:06	85.316
07/22/02	14:13:06	84.349
07/22/02	14:14:06	84.179
07/22/02	14:15:06	83.894
07/22/02	14:16:06	84.605
07/22/02	14:17:06	85.572
07/22/02	14:18:06	84.947
07/22/02	14:19:06	85.658
07/22/02	14:20:06	83.781
07/22/02	14:21:06	84.947
07/22/02	14:22:06	84.037
07/22/02	14:23:06	84.236
07/22/02	14:24:06	83.525
07/22/02	14:25:06	84.037
07/22/02	14:26:06	83.183
07/22/02	14:27:06	82.927
07/22/02	14:28:06	84.748
07/22/02	14:29:06	84.292
07/22/02	14:30:06	84.890
07/22/02	14:31:06	85.060
07/22/02	14:32:06	86.255
07/22/02	14:33:06	79.970
07/22/02	14:34:06	81.505
07/22/02	14:35:06	82.216
07/22/02	14:36:06	81.705
07/22/02	14:37:06	82.273
07/22/02	14:38:06	82.273
07/22/02	14:39:06	80.795
07/22/02	14:40:06	83.183
07/22/02	14:41:06	81.705
07/22/02	14:42:06	82.074
07/22/02	14:43:06	81.363
07/22/02	14:44:06	82.302
07/22/02	14:45:06	80.340
07/22/02	14:46:06	80.539
07/22/02	14:47:06	82.558
07/22/02	14:48:06	80.283
07/22/02	14:49:06	81.193
07/22/02	14:50:06	82.074
07/22/02	14:51:06	80.681
07/22/02	14:52:06	81.392
07/22/02	14:53:06	81.136
07/22/02	14:54:06	80.908
07/22/02	14:55:06	80.539
07/22/02	14:56:06	81.705
07/22/02	14:57:06	80.937
07/22/02	14:58:06	81.761
07/22/02	14:59:06	80.652
07/22/02	15:00:06	81.050
07/22/02	15:01:06	81.306
07/22/02	15:02:06	81.904
07/22/02	15:03:06	78.974
07/22/02	15:04:06	79.373
07/22/02	15:05:06	90.265
07/22/02	15:06:06	80.738
07/22/02	15:07:06	81.193
07/22/02	15:08:06	82.558
07/22/02	15:09:06	81.050
07/22/02	15:10:06	85.316
07/22/02	15:11:06	82.103
07/22/02	15:12:06	82.757
07/22/02	15:13:06	83.468
07/22/02	15:14:06	83.837
07/22/02	15:15:06	82.814
07/22/02	15:16:06	82.984
07/22/02	15:17:06	82.103
07/22/02	15:18:06	81.818
07/22/02	15:19:06	83.070
07/22/02	15:20:06	82.927
07/22/02	15:21:06	82.671
07/22/02	15:22:06	82.160
07/22/02	15:23:06	81.847
07/22/02	15:24:06	83.439
07/22/02	15:25:06	83.240
07/22/02	15:26:06	82.984
07/22/02	15:27:06	83.439
07/22/02	15:28:06	82.216
07/22/02	15:29:06	80.738
07/22/02	15:30:06	83.326
07/22/02	15:31:06	82.359
07/22/02	15:32:06	81.761
07/22/02	15:33:06	82.814
07/22/02	15:34:06	82.359
07/22/02	15:35:06	80.795
07/22/02	15:36:06	84.406
07/22/02	15:37:06	84.748
07/22/02	15:38:06	83.468
07/22/02	15:39:06	84.236
07/22/02	15:40:06	84.492
07/22/02	15:41:06	84.406
07/22/02	15:42:06	84.605
07/22/02	15:43:06	83.525
07/22/02	15:44:06	83.525
07/22/02	15:45:06	84.748
07/22/02	15:46:06	86.681
07/22/02	15:47:06	87.279
07/22/02	15:48:06	86.966
07/22/02	15:49:06	87.335
07/22/02	15:50:06	88.046
07/22/02	15:51:06	87.023
07/22/02	15:52:06	87.648
07/22/02	15:53:06	86.880
07/22/02	15:54:06	86.681
07/22/02	15:55:06	85.857
07/22/02	15:56:06	87.421
07/22/02	15:57:06	85.714
07/22/02	15:58:06	84.748
07/22/02	15:59:06	86.226
07/22/02	16:00:06	84.947
07/22/02	16:01:06	86.226
07/22/02	16:02:06	84.406
07/22/02	16:03:06	84.150
07/22/02	16:04:06	84.890
07/22/02	16:05:06	85.316
07/22/02	16:06:06	85.089
07/22/02	16:07:06	83.894
07/22/02	16:08:06	84.804
07/22/02	16:09:06	85.203
07/22/02	16:10:06	86.226
07/22/02	16:11:06	85.402
07/22/02	16:12:06	85.771
07/22/02	16:13:06	85.146
07/22/02	16:14:06	85.060
07/22/02	16:15:06	82.984
07/22/02	16:16:06	84.236
07/22/02	16:17:06	83.695
07/22/02	16:18:06	83.468
07/22/02	16:19:06	83.837
07/22/02	16:20:06	84.406
07/22/02	16:21:06	83.837
07/22/02	16:22:06	85.857
07/22/02	16:23:06	85.003
07/22/02	16:24:06	84.349
07/22/02	16:25:06	85.601
07/22/02	16:26:06	85.316
07/22/02	16:27:06	84.179
07/22/02	16:28:06	85.259
07/22/02	16:29:06	85.771
07/22/02	16:30:06	85.259
07/22/02	16:31:06	84.292
07/22/02	16:32:06	86.624
07/22/02	16:33:06	84.634
07/22/02	16:34:06	85.402
07/22/02	16:35:06	84.861
07/22/02	16:36:06	85.913
07/22/02	16:37:06	84.349
07/22/02	16:38:06	83.724
07/22/02	16:39:06	84.548
07/22/02	16:40:06	85.089
07/22/02	16:41:06	85.515
07/22/02	16:42:06	84.634
07/22/02	16:43:06	85.203
07/22/02	16:44:06	84.548

M. L. KING AND MITCHELL - NO. 7282 cont.

Date	Time	Pres (PSI)
07/22/02	16:45:06	86.312
07/22/02	16:46:06	87.023
07/22/02	16:47:06	86.255
07/22/02	16:48:06	85.060
07/22/02	16:49:06	84.691
07/22/02	16:50:06	84.804
07/22/02	16:51:06	85.714
07/22/02	16:52:06	85.658
07/22/02	16:53:06	84.947
07/22/02	16:54:06	85.658
07/22/02	16:55:06	84.037
07/22/02	16:56:06	85.970
07/22/02	16:57:06	84.435
07/22/02	16:58:06	84.605
07/22/02	16:59:06	85.060
07/22/02	17:00:06	83.269
07/22/02	17:01:06	83.923
07/22/02	17:02:06	83.582
07/22/02	17:03:06	85.259
07/22/02	17:04:06	82.757
07/22/02	17:05:06	84.093
07/22/02	17:06:06	85.003
07/22/02	17:07:06	84.435
07/22/02	17:08:06	82.984
07/22/02	17:09:06	85.060
07/22/02	17:10:06	85.857
07/22/02	17:11:06	84.492
07/22/02	17:12:06	85.658
07/22/02	17:13:06	84.634
07/22/02	17:14:06	82.302
07/22/02	17:15:06	83.638
07/22/02	17:16:06	84.748
07/22/02	17:17:06	83.269
07/22/02	17:18:06	83.525
07/22/02	17:19:06	85.345
07/22/02	17:20:06	85.316
07/22/02	17:21:06	84.947
07/22/02	17:22:06	83.894
07/22/02	17:23:06	84.804
07/22/02	17:24:06	85.402
07/22/02	17:25:06	85.060
07/22/02	17:26:06	85.203
07/22/02	17:27:06	85.658
07/22/02	17:28:06	85.572
07/22/02	17:29:06	85.402
07/22/02	17:30:06	85.402
07/22/02	17:31:06	85.003
07/22/02	17:32:06	84.890
07/22/02	17:33:06	84.435
07/22/02	17:34:06	85.970
07/22/02	17:35:06	83.240
07/22/02	17:36:06	84.435
07/22/02	17:37:06	84.435
07/22/02	17:38:06	84.605
07/22/02	17:39:06	85.259
07/22/02	17:40:06	82.671
07/22/02	17:41:06	83.638
07/22/02	17:42:06	84.037
07/22/02	17:43:06	84.292
07/22/02	17:44:06	83.638
07/22/02	17:45:06	83.269
07/22/02	17:46:06	83.923
07/22/02	17:47:06	84.150
07/22/02	17:48:06	84.804
07/22/02	17:49:06	83.837
07/22/02	17:50:06	84.093
07/22/02	17:51:06	84.947
07/22/02	17:52:06	84.748
07/22/02	17:53:06	83.894
07/22/02	17:54:06	84.093
07/22/02	17:55:06	83.724
07/22/02	17:56:06	83.183
07/22/02	17:57:06	83.894
07/22/02	17:58:06	83.013
07/22/02	17:59:06	83.269
07/22/02	18:00:06	82.160
07/22/02	18:01:06	82.927
07/22/02	18:02:06	83.382
07/22/02	18:03:06	81.818
07/22/02	18:04:06	83.240
07/22/02	18:05:06	82.273
07/22/02	18:06:06	83.269
07/22/02	18:07:06	83.695
07/22/02	18:08:06	83.894
07/22/02	18:09:06	84.435
07/22/02	18:10:06	83.980
07/22/02	18:11:06	83.582
07/22/02	18:12:06	82.984
07/22/02	18:13:06	83.070
07/22/02	18:14:06	82.359
07/22/02	18:15:06	83.468
07/22/02	18:16:06	84.406
07/22/02	18:17:06	83.781
07/22/02	18:18:06	85.203
07/22/02	18:19:06	83.980
07/22/02	18:20:06	84.150
07/22/02	18:21:06	84.406
07/22/02	18:22:06	83.980
07/22/02	18:23:06	84.349
07/22/02	18:24:06	84.634
07/22/02	18:25:06	84.406
07/22/02	18:26:06	84.236
07/22/02	18:27:06	83.183
07/22/02	18:28:06	83.525
07/22/02	18:29:06	85.146
07/22/02	18:30:06	84.691
07/22/02	18:31:06	83.525
07/22/02	18:32:06	84.236
07/22/02	18:33:06	83.923
07/22/02	18:34:06	84.292
07/22/02	18:35:06	84.406
07/22/02	18:36:06	68.424
07/22/02	18:37:06	69.931
07/22/02	18:38:06	71.523
07/22/02	18:39:06	69.447
07/22/02	18:40:06	69.732
07/22/02	18:41:06	69.192
07/22/02	18:42:06	80.937
07/22/02	18:43:06	87.279
07/22/02	18:44:06	83.240
07/22/02	18:45:06	84.435
07/22/02	18:46:06	85.003
07/22/02	18:47:06	84.748
07/22/02	18:48:06	80.283
07/22/02	18:49:06	80.340
07/22/02	18:50:06	81.904
07/22/02	18:51:06	81.847
07/22/02	18:52:06	82.017
07/22/02	18:53:06	80.652
07/22/02	18:54:06	82.757
07/22/02	18:55:06	81.591
07/22/02	18:56:06	82.273
07/22/02	18:57:06	82.273
07/22/02	18:58:06	80.681
07/22/02	18:59:06	83.013
07/22/02	19:00:06	79.884
07/22/02	19:01:06	80.908
07/22/02	19:02:06	80.937
07/22/02	19:03:06	80.994
07/22/02	19:04:06	80.652
07/22/02	19:05:06	80.652
07/22/02	19:06:06	80.340
07/22/02	19:07:06	81.705
07/22/02	19:08:06	80.425
07/22/02	19:09:06	81.449
07/22/02	19:10:06	81.136
07/22/02	19:11:06	80.140
07/22/02	19:12:06	89.099
07/22/02	19:13:06	80.851
07/22/02	19:14:06	84.179
07/22/02	19:15:06	82.871
07/22/02	19:16:06	83.070
07/22/02	19:17:06	84.748
07/22/02	19:18:06	82.615
07/22/02	19:19:06	83.468
07/22/02	19:20:06	83.582
07/22/02	19:21:06	83.382
07/22/02	19:22:06	83.837
07/22/02	19:23:06	83.525
07/22/02	19:24:06	83.724
07/22/02	19:25:06	82.757
07/22/02	19:26:06	82.757
07/22/02	19:27:06	83.326
07/22/02	19:28:06	84.150
07/22/02	19:29:06	83.183
07/22/02	19:30:06	83.837
07/22/02	19:31:06	84.292
07/22/02	19:32:06	83.695
07/22/02	19:33:06	83.638
07/22/02	19:34:06	83.183
07/22/02	19:35:06	82.216
07/22/02	19:36:06	84.037
07/22/02	19:37:06	83.240
07/22/02	19:38:06	82.017
07/22/02	19:39:06	84.406
07/22/02	19:40:06	83.240
07/22/02	19:41:06	83.240
07/22/02	19:42:06	83.894
07/22/02	19:43:06	82.757
07/22/02	19:44:06	82.871
07/22/02	19:45:06	82.615
07/22/02	19:46:06	83.837
07/22/02	19:47:06	83.582
07/22/02	19:48:06	84.605
07/22/02	19:49:06	83.894
07/22/02	19:50:06	83.837
07/22/02	19:51:06	84.947
07/22/02	19:52:06	83.240
07/22/02	19:53:06	84.037
07/22/02	19:54:06	83.638
07/22/02	19:55:06	84.691
07/22/02	19:56:06	83.269
07/22/02	19:57:06	84.748
07/22/02	19:58:06	83.326
07/22/02	19:59:06	83.837
07/22/02	20:00:06	82.416
07/22/02	20:01:06	84.150
07/22/02	20:02:06	82.814
07/22/02	20:03:06	83.240
07/22/02	20:04:06	83.724
07/22/02	20:05:06	82.074
07/22/02	20:06:06	83.894
07/22/02	20:07:06	83.582
07/22/02	20:08:06	84.634
07/22/02	20:09:06	82.927
07/22/02	20:10:06	83.070
07/22/02	20:11:06	85.060
07/22/02	20:12:06	81.961
07/22/02	20:13:06	82.984
07/22/02	20:14:06	83.240
07/22/02	20:15:06	83.126
07/22/02	20:16:06	83.126
07/22/02	20:17:06	82.728
07/22/02	20:18:06	82.757
07/22/02	20:19:06	83.980
07/22/02	20:20:06	84.236
07/22/02	20:21:06	83.468
07/22/02	20:22:06	83.269
07/22/02	20:23:06	83.724
07/22/02	20:24:06	83.240
07/22/02	20:25:06	82.871
07/22/02	20:26:06	83.468
07/22/02	20:27:06	83.638
07/22/02	20:28:06	83.638
07/22/02	20:29:06	83.326
07/22/02	20:30:06	83.724
07/22/02	20:31:06	83.837
07/22/02	20:32:06	83.126
07/22/02	20:33:06	82.529
07/22/02	20:34:06	83.525
07/22/02	20:35:06	83.638
07/22/02	20:36:06	83.013
07/22/02	20:37:06	83.070
07/22/02	20:38:06	83.013
07/22/02	20:39:06	83.240
07/22/02	20:40:06	83.183
07/22/02	20:41:06	84.548
07/22/02	20:42:06	82.273
07/22/02	20:43:06	83.326
07/22/02	20:44:06	83.269
07/22/02	20:45:06	84.435
07/22/02	20:46:06	83.525
07/22/02	20:47:06	81.591
07/22/02	20:48:06	84.748
07/22/02	20:49:06	82.074
07/22/02	20:50:06	82.216
07/22/02	20:51:06	84.093
07/22/02	20:52:06	83.980
07/22/02	20:53:06	84.236
07/22/02	20:54:06	82.984
07/22/02	20:55:06	85.800
07/22/02	20:56:06	85.203
07/22/02	20:57:06	84.691
07/22/02	20:58:06	85.316
07/22/02	20:59:06	84.548
07/22/02	21:00:06	84.804
07/22/02	21:01:06	85.259
07/22/02	21:02:06	84.548
07/22/02	21:03:06	83.382
07/22/02	21:04:06	83.695
07/22/02	21:05:06	82.529
07/22/02	21:06:06	84.548
07/22/02	21:07:06	82.871
07/22/02	21:08:06	83.525

M. L. KING AND MITCHELL - NO. 7282 cont.

Date	Time	Pres (PSI)
07/22/02	21:09:06	82.216
07/22/02	21:10:06	82.558
07/22/02	21:11:06	83.894
07/22/02	21:12:06	82.273
07/22/02	21:13:06	82.529
07/22/02	21:14:06	82.927
07/22/02	21:15:06	83.638
07/22/02	21:16:06	82.814
07/22/02	21:17:06	84.037
07/22/02	21:18:06	83.126
07/22/02	21:19:06	84.804
07/22/02	21:20:06	83.837
07/22/02	21:21:06	84.406
07/22/02	21:22:06	83.468
07/22/02	21:23:06	83.070
07/22/02	21:24:06	85.060
07/22/02	21:25:06	85.003
07/22/02	21:26:06	84.406
07/22/02	21:27:06	84.861
07/22/02	21:28:06	83.724
07/22/02	21:29:06	82.984
07/22/02	21:30:06	84.093
07/22/02	21:31:06	84.804
07/22/02	21:32:06	83.126
07/22/02	21:33:06	83.724
07/22/02	21:34:06	84.292
07/22/02	21:35:06	84.093
07/22/02	21:36:06	83.468
07/22/02	21:37:06	84.236
07/22/02	21:38:06	84.605
07/22/02	21:39:06	83.240
07/22/02	21:40:06	83.468
07/22/02	21:41:06	83.525
07/22/02	21:42:06	85.601
07/22/02	21:43:06	85.259
07/22/02	21:44:06	84.748
07/22/02	21:45:06	83.980
07/22/02	21:46:06	84.748
07/22/02	21:47:06	84.349
07/22/02	21:48:06	83.468
07/22/02	21:49:06	84.947
07/22/02	21:50:06	85.771
07/22/02	21:51:06	85.771
07/22/02	21:52:06	85.601
07/22/02	21:53:06	86.027
07/22/02	21:54:06	86.169
07/22/02	21:55:06	86.425
07/22/02	21:56:06	85.572
07/22/02	21:57:06	85.316
07/22/02	21:58:06	85.345
07/22/02	21:59:06	86.937
07/22/02	22:00:06	86.312
07/22/02	22:01:06	86.312
07/22/02	22:02:06	83.980
07/22/02	22:03:06	84.890
07/22/02	22:04:06	84.691
07/22/02	22:05:06	84.890
07/22/02	22:06:06	85.402
07/22/02	22:07:06	65.324
07/22/02	22:08:06	67.912
07/22/02	22:09:06	80.226
07/22/02	22:10:06	83.837
07/22/02	22:11:06	82.472
07/22/02	22:12:06	82.871
07/22/02	22:13:06	83.382
07/22/02	22:14:06	83.183
07/22/02	22:15:06	83.382
07/22/02	22:16:06	83.326
07/22/02	22:17:06	83.439
07/22/02	22:18:06	83.382
07/22/02	22:19:06	82.558
07/22/02	22:20:06	88.558
07/22/02	22:21:06	84.548
07/22/02	22:22:06	83.894
07/22/02	22:23:06	84.179
07/22/02	22:24:06	85.003
07/22/02	22:25:06	84.861
07/22/02	22:26:06	84.037
07/22/02	22:27:06	84.804
07/22/02	22:28:06	85.146
07/22/02	22:29:06	85.003
07/22/02	22:30:06	85.800
07/22/02	22:31:06	85.572
07/22/02	22:32:06	85.572
07/22/02	22:33:06	85.146
07/22/02	22:34:06	84.861
07/22/02	22:35:06	86.255
07/22/02	22:36:06	86.255
07/22/02	22:37:06	86.824
07/22/02	22:38:06	86.027
07/22/02	22:39:06	86.511
07/22/02	22:40:06	86.027
07/22/02	22:41:06	87.023
07/22/02	22:42:06	86.880
07/22/02	22:43:06	87.222
07/22/02	22:44:06	86.312
07/22/02	22:45:06	87.193
07/22/02	22:46:06	86.937
07/22/02	22:47:06	87.421
07/22/02	22:48:06	87.079
07/22/02	22:49:06	86.880
07/22/02	22:50:06	87.279
07/22/02	22:51:06	87.335
07/22/02	22:52:06	86.425
07/22/02	22:53:06	88.245
07/22/02	22:54:06	87.535
07/22/02	22:55:06	68.992
07/22/02	22:56:06	74.822
07/22/02	22:57:06	75.676
07/22/02	22:58:06	72.945
07/22/02	22:59:06	73.799
07/22/02	23:00:06	80.226
07/22/02	23:01:06	85.316
07/22/02	23:02:06	85.003
07/22/02	23:03:06	83.837
07/22/02	23:04:06	84.548
07/22/02	23:05:06	85.089
07/22/02	23:06:06	84.634
07/22/02	23:07:06	83.923
07/22/02	23:08:06	83.980
07/22/02	23:09:06	84.435
07/22/02	23:10:06	84.179
07/22/02	23:11:06	84.691
07/22/02	23:12:06	84.804
07/22/02	23:13:06	84.605
07/22/02	23:14:06	85.089
07/22/02	23:15:06	84.093
07/22/02	23:16:06	84.890
07/22/02	23:17:06	85.402
07/22/02	23:18:06	84.634
07/22/02	23:19:06	85.203
07/22/02	23:20:06	84.890
07/22/02	23:21:06	84.634
07/22/02	23:22:06	84.947
07/22/02	23:23:06	83.923
07/22/02	23:24:06	83.837
07/22/02	23:25:06	84.548
07/22/02	23:26:06	84.947
07/22/02	23:27:06	84.804
07/22/02	23:28:06	84.748
07/22/02	23:29:06	84.548
07/22/02	23:30:06	86.169
07/22/02	23:31:06	83.980
07/22/02	23:32:06	84.947
07/22/02	23:33:06	84.349
07/22/02	23:34:06	85.316
07/22/02	23:35:06	84.349
07/22/02	23:36:06	84.435
07/22/02	23:37:06	91.431
07/22/02	23:38:06	84.748
07/22/02	23:39:06	87.222
07/22/02	23:40:06	87.847
07/22/02	23:41:06	87.478
07/22/02	23:42:06	87.335
07/22/02	23:43:06	87.904
07/22/02	23:44:06	86.937
07/22/02	23:45:06	86.568
07/22/02	23:46:06	87.990
07/22/02	23:47:06	87.677
07/22/02	23:48:06	87.734
07/22/02	23:49:06	88.189
07/22/02	23:50:06	87.648
07/22/02	23:51:06	87.677
07/22/02	23:52:06	88.359
07/22/02	23:53:06	88.501
07/22/02	23:54:06	86.937
07/22/02	23:55:06	87.535
07/22/02	23:56:06	88.501
07/22/02	23:57:06	87.392
07/22/02	23:58:06	88.587
07/22/02	23:59:06	88.501
07/23/02	00:00:06	87.790
07/23/02	00:01:06	88.757
07/23/02	00:02:06	87.335
07/23/02	00:03:06	88.644
07/23/02	00:04:06	88.245
07/23/02	00:05:06	88.644
07/23/02	00:06:06	88.558
07/23/02	00:07:06	87.990
07/23/02	00:08:06	87.790
07/23/02	00:09:06	88.245
07/23/02	00:10:06	88.189
07/23/02	00:11:06	88.445
07/23/02	00:12:06	90.634
07/23/02	00:13:06	89.468
07/23/02	00:14:06	89.611
07/23/02	00:15:06	89.753
07/23/02	00:16:06	89.554
07/23/02	00:17:06	89.866
07/23/02	00:18:06	89.980
07/23/02	00:19:06	89.810
07/23/02	00:20:06	90.066
07/23/02	00:21:06	89.724
07/23/02	00:22:06	89.212
07/23/02	00:23:06	90.521
07/23/02	00:24:06	89.468
07/23/02	00:25:06	89.611
07/23/02	00:26:06	90.435
07/23/02	00:27:06	89.611
07/23/02	00:28:06	89.753
07/23/02	00:29:06	90.378
07/23/02	00:30:06	89.355
07/23/02	00:31:06	90.122
07/23/02	00:32:06	90.066
07/23/02	00:33:06	89.724
07/23/02	00:34:06	89.753
07/23/02	00:35:06	89.980
07/23/02	00:36:06	89.554
07/23/02	00:37:06	89.468
07/23/02	00:38:06	90.833
07/23/02	00:39:06	89.156
07/23/02	00:40:06	90.236
07/23/02	00:41:06	90.122
07/23/02	00:42:06	89.099
07/23/02	00:43:06	89.667
07/23/02	00:44:06	89.355
07/23/02	00:45:06	89.525
07/23/02	00:46:06	90.378
07/23/02	00:47:06	89.468
07/23/02	00:48:06	90.691
07/23/02	00:49:06	90.009
07/23/02	00:50:06	89.810
07/23/02	00:51:06	90.179
07/23/02	00:52:06	89.667
07/23/02	00:53:06	90.265
07/23/02	00:54:06	89.724
07/23/02	00:55:06	90.122
07/23/02	00:56:06	90.435
07/23/02	00:57:06	89.866
07/23/02	00:58:06	90.122
07/23/02	00:59:06	90.378
07/23/02	01:00:06	89.355
07/23/02	01:01:06	89.611
07/23/02	01:02:06	89.923
07/23/02	01:03:06	89.866
07/23/02	01:04:06	89.611
07/23/02	01:05:06	90.236
07/23/02	01:06:06	89.269
07/23/02	01:07:06	90.122
07/23/02	01:08:06	89.810
07/23/02	01:09:06	89.611
07/23/02	01:10:06	89.099
07/23/02	01:11:06	89.810
07/23/02	01:12:06	78.974
07/23/02	01:13:06	85.714
07/23/02	01:14:06	85.572
07/23/02	01:15:06	90.634
07/23/02	01:16:06	89.667
07/23/02	01:17:06	89.013
07/23/02	01:18:06	89.667
07/23/02	01:19:06	89.753
07/23/02	01:20:06	90.009
07/23/02	01:21:06	89.753
07/23/02	01:22:06	89.667
07/23/02	01:23:06	89.554
07/23/02	01:24:06	89.724
07/23/02	01:25:06	89.810
07/23/02	01:26:06	89.724
07/23/02	01:27:06	89.411
07/23/02	01:28:06	90.009
07/23/02	01:29:06	90.009
07/23/02	01:30:06	90.179
07/23/02	01:31:06	89.810
07/23/02	01:32:06	88.587

M. L. KING AND MITCHELL - NO. 7282 cont.

Date	Time	Pres (PSI)
07/23/02	01:33:06	89.810
07/23/02	01:34:06	89.525
07/23/02	01:35:06	90.634
07/23/02	01:36:06	89.753
07/23/02	01:37:06	89.411
07/23/02	01:38:06	90.122
07/23/02	01:39:06	89.611
07/23/02	01:40:06	90.179
07/23/02	01:41:06	89.355
07/23/02	01:42:06	90.236
07/23/02	01:43:06	90.265
07/23/02	01:44:06	90.236
07/23/02	01:45:06	90.435
07/23/02	01:46:06	90.435
07/23/02	01:47:06	90.009
07/23/02	01:48:06	90.521
07/23/02	01:49:06	90.066
07/23/02	01:50:06	90.777
07/23/02	01:51:06	90.919
07/23/02	01:52:06	90.577
07/23/02	01:53:06	90.464
07/23/02	01:54:06	91.402
07/23/02	01:55:06	91.089
07/23/02	01:56:06	90.976
07/23/02	01:57:06	90.577
07/23/02	01:58:06	90.720
07/23/02	01:59:06	90.720
07/23/02	02:00:06	90.464
07/23/02	02:01:06	90.464
07/23/02	02:02:06	90.122
07/23/02	02:03:06	89.724
07/23/02	02:04:06	90.833
07/23/02	02:05:06	90.521
07/23/02	02:06:06	90.322
07/23/02	02:07:06	90.265
07/23/02	02:08:06	90.236
07/23/02	02:09:06	90.691
07/23/02	02:10:06	89.667
07/23/02	02:11:06	90.009
07/23/02	02:12:06	90.265
07/23/02	02:13:06	90.378
07/23/02	02:14:06	90.435
07/23/02	02:15:06	90.322
07/23/02	02:16:06	89.866
07/23/02	02:17:06	90.577
07/23/02	02:18:06	90.464
07/23/02	02:19:06	89.611
07/23/02	02:20:06	90.833
07/23/02	02:21:06	89.753
07/23/02	02:22:06	90.577
07/23/02	02:23:06	90.919
07/23/02	02:24:06	90.265
07/23/02	02:25:06	90.833
07/23/02	02:26:06	90.577
07/23/02	02:27:06	90.464
07/23/02	02:28:06	90.179
07/23/02	02:29:06	90.236
07/23/02	02:30:06	90.577
07/23/02	02:31:06	89.554
07/23/02	02:32:06	89.866
07/23/02	02:33:06	89.810
07/23/02	02:34:06	90.577
07/23/02	02:35:06	89.923
07/23/02	02:36:06	90.009
07/23/02	02:37:06	89.753
07/23/02	02:38:06	91.032
07/23/02	02:39:06	90.322
07/23/02	02:40:06	90.009
07/23/02	02:41:06	89.810
07/23/02	02:42:06	90.066
07/23/02	02:43:06	90.009
07/23/02	02:44:06	89.667
07/23/02	02:45:06	89.923
07/23/02	02:46:06	89.866
07/23/02	02:47:06	89.667
07/23/02	02:48:06	89.724
07/23/02	02:49:06	90.122
07/23/02	02:50:06	90.777
07/23/02	02:51:06	88.644
07/23/02	02:52:06	90.691
07/23/02	02:53:06	90.378
07/23/02	02:54:06	89.810
07/23/02	02:55:06	90.179
07/23/02	02:56:06	89.866
07/23/02	02:57:06	90.122
07/23/02	02:58:06	90.009
07/23/02	02:59:06	89.611
07/23/02	03:00:06	90.265
07/23/02	03:01:06	89.923
07/23/02	03:02:06	90.322
07/23/02	03:03:06	89.212
07/23/02	03:04:06	89.753
07/23/02	03:05:06	90.066
07/23/02	03:06:06	89.753
07/23/02	03:07:06	89.810
07/23/02	03:08:06	89.298
07/23/02	03:09:06	89.753
07/23/02	03:10:06	90.236
07/23/02	03:11:06	90.777
07/23/02	03:12:06	90.066
07/23/02	03:13:06	90.009
07/23/02	03:14:06	90.378
07/23/02	03:15:06	90.577
07/23/02	03:16:06	90.236
07/23/02	03:17:06	90.009
07/23/02	03:18:06	90.179
07/23/02	03:19:06	89.980
07/23/02	03:20:06	90.634
07/23/02	03:21:06	89.667
07/23/02	03:22:06	90.066
07/23/02	03:23:06	89.753
07/23/02	03:24:06	90.236
07/23/02	03:25:06	91.487
07/23/02	03:26:06	89.212
07/23/02	03:27:06	90.464
07/23/02	03:28:06	89.724
07/23/02	03:29:06	90.777
07/23/02	03:30:06	90.777
07/23/02	03:31:06	90.179
07/23/02	03:32:06	90.777
07/23/02	03:33:06	90.435
07/23/02	03:34:06	90.777
07/23/02	03:35:06	90.634
07/23/02	03:36:06	90.265
07/23/02	03:37:06	90.577
07/23/02	03:38:06	90.265
07/23/02	03:39:06	90.577
07/23/02	03:40:06	90.066
07/23/02	03:41:06	90.464
07/23/02	03:42:06	90.236
07/23/02	03:43:06	90.066
07/23/02	03:44:06	89.923
07/23/02	03:45:06	90.464
07/23/02	03:46:06	89.980
07/23/02	03:47:06	89.980
07/23/02	03:48:06	90.179
07/23/02	03:49:06	90.521
07/23/02	03:50:06	90.179
07/23/02	03:51:06	89.980
07/23/02	03:52:06	90.236
07/23/02	03:53:06	90.236
07/23/02	03:54:06	90.378
07/23/02	03:55:06	90.066
07/23/02	03:56:06	89.724
07/23/02	03:57:06	90.464
07/23/02	03:58:06	89.411
07/23/02	03:59:06	90.691
07/23/02	04:00:06	89.667
07/23/02	04:01:06	89.866
07/23/02	04:02:06	90.009
07/23/02	04:03:06	89.667
07/23/02	04:04:06	90.122
07/23/02	04:05:06	89.980
07/23/02	04:06:06	89.980
07/23/02	04:07:06	89.980
07/23/02	04:08:06	90.009
07/23/02	04:09:06	89.980
07/23/02	04:10:06	90.179
07/23/02	04:11:06	90.265
07/23/02	04:12:06	89.667
07/23/02	04:13:06	89.468
07/23/02	04:14:06	89.611
07/23/02	04:15:06	89.724
07/23/02	04:16:06	89.554
07/23/02	04:17:06	89.866
07/23/02	04:18:06	90.265
07/23/02	04:19:06	89.866
07/23/02	04:20:06	90.521
07/23/02	04:21:06	89.468
07/23/02	04:22:06	90.179
07/23/02	04:23:06	90.009
07/23/02	04:24:06	89.810
07/23/02	04:25:06	90.179
07/23/02	04:26:06	89.753
07/23/02	04:27:06	89.269
07/23/02	04:28:06	89.923
07/23/02	04:29:06	89.980
07/23/02	04:30:06	89.355
07/23/02	04:31:06	90.009
07/23/02	04:32:06	89.611
07/23/02	04:33:06	89.923
07/23/02	04:34:06	89.866
07/23/02	04:35:06	90.378
07/23/02	04:36:06	89.923
07/23/02	04:37:06	89.866
07/23/02	04:38:06	89.724
07/23/02	04:39:06	89.611
07/23/02	04:40:06	90.322
07/23/02	04:41:06	89.298
07/23/02	04:42:06	90.122
07/23/02	04:43:06	90.265
07/23/02	04:44:06	90.066
07/23/02	04:45:06	89.980
07/23/02	04:46:06	89.554
07/23/02	04:47:06	90.720
07/23/02	04:48:06	89.554
07/23/02	04:49:06	90.236
07/23/02	04:50:06	90.122
07/23/02	04:51:06	89.554
07/23/02	04:52:06	90.378
07/23/02	04:53:06	90.009
07/23/02	04:54:06	89.298
07/23/02	04:55:06	89.866
07/23/02	04:56:06	89.667
07/23/02	04:57:06	89.753
07/23/02	04:58:06	89.753
07/23/02	04:59:06	85.458
07/23/02	05:00:06	83.468
07/23/02	05:01:06	87.591
07/23/02	05:02:06	86.681
07/23/02	05:03:06	87.193
07/23/02	05:04:06	86.425
07/23/02	05:05:06	86.880
07/23/02	05:06:06	86.027
07/23/02	05:07:06	86.027
07/23/02	05:08:06	85.800
07/23/02	05:09:06	85.402
07/23/02	05:10:06	85.060
07/23/02	05:11:06	85.458
07/23/02	05:12:06	84.605
07/23/02	05:13:06	85.203
07/23/02	05:14:06	84.349
07/23/02	05:15:06	84.861
07/23/02	05:16:06	84.748
07/23/02	05:17:06	84.292
07/23/02	05:18:06	85.316
07/23/02	05:19:06	85.003
07/23/02	05:20:06	85.060
07/23/02	05:21:06	84.890
07/23/02	05:22:06	85.146
07/23/02	05:23:06	84.861
07/23/02	05:24:06	84.691
07/23/02	05:25:06	84.861
07/23/02	05:26:06	84.748
07/23/02	05:27:06	83.894
07/23/02	05:28:06	82.529
07/23/02	05:29:06	82.871
07/23/02	05:30:06	84.179
07/23/02	05:31:06	83.638
07/23/02	05:32:06	82.103
07/23/02	05:33:06	82.558
07/23/02	05:34:06	82.871
07/23/02	05:35:06	83.382
07/23/02	05:36:06	82.757
07/23/02	05:37:06	83.013
07/23/02	05:38:06	81.562
07/23/02	05:39:06	80.937
07/23/02	05:40:06	81.136
07/23/02	05:41:06	82.216
07/23/02	05:42:06	81.050
07/23/02	05:43:06	80.738
07/23/02	05:44:06	80.795
07/23/02	05:45:06	80.738
07/23/02	05:46:06	80.425
07/23/02	05:47:06	80.084
07/23/02	05:48:06	78.804
07/23/02	05:49:06	77.553
07/23/02	05:50:06	89.611
07/23/02	05:51:06	91.146
07/23/02	05:52:06	87.335
07/23/02	05:53:06	88.956
07/23/02	05:54:06	89.156
07/23/02	05:55:06	88.189
07/23/02	05:56:06	88.701

M. L. KING AND MITCHELL - NO. 7282 cont.

Date	Time	Pres (PSI)
07/23/02	05:57:06	88.302
07/23/02	05:58:06	88.189
07/23/02	05:59:06	88.245
07/23/02	06:00:06	88.558
07/23/02	06:01:06	87.392
07/23/02	06:02:06	87.421
07/23/02	06:03:06	87.335
07/23/02	06:04:06	88.103
07/23/02	06:05:06	88.501
07/23/02	06:06:06	87.222
07/23/02	06:07:06	87.023
07/23/02	06:08:06	87.421
07/23/02	06:09:06	87.535
07/23/02	06:10:06	86.624
07/23/02	06:11:06	87.222
07/23/02	06:12:06	87.591
07/23/02	06:13:06	87.904
07/23/02	06:14:06	86.624
07/23/02	06:15:06	87.079
07/23/02	06:16:06	86.226
07/23/02	06:17:06	87.023
07/23/02	06:18:06	87.079
07/23/02	06:19:06	86.425
07/23/02	06:20:06	87.136
07/23/02	06:21:06	85.771
07/23/02	06:22:06	86.767
07/23/02	06:23:06	87.335
07/23/02	06:24:06	87.079
07/23/02	06:25:06	70.869
07/23/02	06:26:06	74.197
07/23/02	06:27:06	78.008
07/23/02	06:28:06	87.648
07/23/02	06:29:06	87.023
07/23/02	06:30:06	85.402
07/23/02	06:31:06	85.913
07/23/02	06:32:06	85.658
07/23/02	06:33:06	85.601
07/23/02	06:34:06	85.089
07/23/02	06:35:06	85.601
07/23/02	06:36:06	85.458
07/23/02	06:37:06	85.857
07/23/02	06:38:06	85.658
07/23/02	06:39:06	86.255
07/23/02	06:40:06	86.027
07/23/02	06:41:06	85.089
07/23/02	06:42:06	85.146
07/23/02	06:43:06	85.714
07/23/02	06:44:06	85.259
07/23/02	06:45:06	85.089
07/23/02	06:46:06	85.857
07/23/02	06:47:06	83.382
07/23/02	06:48:06	86.425
07/23/02	06:49:06	85.771
07/23/02	06:50:06	84.861
07/23/02	06:51:06	84.947
07/23/02	06:52:06	83.980
07/23/02	06:53:06	85.203
07/23/02	06:54:06	85.658
07/23/02	06:55:06	85.060
07/23/02	06:56:06	85.089
07/23/02	06:57:06	84.179
07/23/02	06:58:06	84.691
07/23/02	06:59:06	85.060
07/23/02	07:00:06	84.093
07/23/02	07:01:06	84.406
07/23/02	07:02:06	84.093
07/23/02	07:03:06	83.468
07/23/02	07:04:06	85.316
07/23/02	07:05:06	82.984
07/23/02	07:06:06	84.179
07/23/02	07:07:06	83.695
07/23/02	07:08:06	84.605
07/23/02	07:09:06	82.814
07/23/02	07:10:06	82.359
07/23/02	07:11:06	84.037
07/23/02	07:12:06	83.439
07/23/02	07:13:06	81.449
07/23/02	07:14:06	82.615
07/23/02	07:15:06	81.505
07/23/02	07:16:06	81.392
07/23/02	07:17:06	80.539
07/23/02	07:18:06	81.050
07/23/02	07:19:06	81.250
07/23/02	07:20:06	81.505
07/23/02	07:21:06	82.757
07/23/02	07:22:06	83.013
07/23/02	07:23:06	83.781
07/23/02	07:24:06	82.615
07/23/02	07:25:06	83.980
07/23/02	07:26:06	82.160
07/23/02	07:27:06	83.269
07/23/02	07:28:06	81.363
07/23/02	07:29:06	83.439
07/23/02	07:30:06	83.695
07/23/02	07:31:06	83.326
07/23/02	07:32:06	81.847
07/23/02	07:33:06	83.382
07/23/02	07:34:06	82.814
07/23/02	07:35:06	84.634
07/23/02	07:36:06	83.781
07/23/02	07:37:06	83.923
07/23/02	07:38:06	84.435
07/23/02	07:39:06	82.757
07/23/02	07:40:06	88.501
07/23/02	07:41:06	85.203
07/23/02	07:42:06	85.089
07/23/02	07:43:06	85.913
07/23/02	07:44:06	85.658
07/23/02	07:45:06	84.605
07/23/02	07:46:06	83.837
07/23/02	07:47:06	83.183
07/23/02	07:48:06	84.492
07/23/02	07:49:06	86.169
07/23/02	07:50:06	84.890
07/23/02	07:51:06	84.349
07/23/02	07:52:06	85.601
07/23/02	07:53:06	86.226
07/23/02	07:54:06	85.913
07/23/02	07:55:06	84.890
07/23/02	07:56:06	83.269
07/23/02	07:57:06	84.093
07/23/02	07:58:06	82.416
07/23/02	07:59:06	84.435
07/23/02	08:00:06	84.605
07/23/02	08:01:06	84.691
07/23/02	08:02:06	86.312
07/23/02	08:03:06	86.482
07/23/02	08:04:06	87.421
07/23/02	08:05:06	85.857
07/23/02	08:06:06	85.345
07/23/02	08:07:06	82.529
07/23/02	08:08:06	83.781
07/23/02	08:09:06	84.150
07/23/02	08:10:06	83.923
07/23/02	08:11:06	87.193
07/23/02	08:12:06	87.079
07/23/02	08:13:06	85.146
07/23/02	08:14:06	86.511
07/23/02	08:15:06	85.913
07/23/02	08:16:06	86.824
07/23/02	08:17:06	86.027
07/23/02	08:18:06	86.027
07/23/02	08:19:06	85.857
07/23/02	08:20:06	86.880
07/23/02	08:21:06	85.601
07/23/02	08:22:06	87.392
07/23/02	08:23:06	84.349
07/23/02	08:24:06	85.089
07/23/02	08:25:06	86.482
07/23/02	08:26:06	87.392
07/23/02	08:27:06	86.511
07/23/02	08:28:06	85.089
07/23/02	08:29:06	85.259
07/23/02	08:30:06	86.255
07/23/02	08:31:06	86.027
07/23/02	08:32:06	86.681
07/23/02	08:33:06	84.804
07/23/02	08:34:06	85.970
07/23/02	08:35:06	85.771
07/23/02	08:36:06	85.572
07/23/02	08:37:06	85.259
07/23/02	08:38:06	84.748
07/23/02	08:39:06	85.316
07/23/02	08:40:06	85.345
07/23/02	08:41:06	84.037
07/23/02	08:42:06	84.179
07/23/02	08:43:06	87.392
07/23/02	08:44:06	85.316
07/23/02	08:45:06	81.107
07/23/02	08:46:06	82.103
07/23/02	08:47:06	82.927
07/23/02	08:48:06	81.904
07/23/02	08:49:06	81.250
07/23/02	08:50:06	82.814
07/23/02	08:51:06	82.558
07/23/02	08:52:06	83.724
07/23/02	08:53:06	84.605
07/23/02	08:54:06	83.439
07/23/02	08:55:06	83.240
07/23/02	08:56:06	84.861
07/23/02	08:57:06	83.894
07/23/02	08:58:06	83.525
07/23/02	08:59:06	79.316
07/23/02	09:00:06	76.443
07/23/02	09:01:06	78.150
07/23/02	09:02:06	76.529
07/23/02	09:03:06	74.965
07/23/02	09:04:06	77.154
07/23/02	09:05:06	76.273
07/23/02	09:06:06	75.818
07/23/02	09:07:06	75.931
07/23/02	09:08:06	76.387
07/23/02	09:09:06	75.476
07/23/02	09:10:06	76.529
07/23/02	09:11:06	75.732
07/23/02	09:12:06	76.273
07/23/02	09:13:06	75.306
07/23/02	09:14:06	76.017
07/23/02	09:15:06	75.420
07/23/02	09:16:06	75.107
07/23/02	09:17:06	75.221
07/23/02	09:18:06	75.021
07/23/02	09:19:06	76.074
07/23/02	09:20:06	74.766
07/23/02	09:21:06	75.221
07/23/02	09:22:06	74.453
07/23/02	09:23:06	76.472
07/23/02	09:24:06	75.875
07/23/02	09:25:06	79.060
07/23/02	09:26:06	84.947
07/23/02	09:27:06	83.695
07/23/02	09:28:06	84.605
07/23/02	09:29:06	84.236
07/23/02	09:30:06	83.183
07/23/02	09:31:06	82.302
07/23/02	09:32:06	83.724
07/23/02	09:33:06	83.695
07/23/02	09:34:06	82.273
07/23/02	09:35:06	81.648
07/23/02	09:36:06	82.359
07/23/02	09:37:06	83.326
07/23/02	09:38:06	85.316
07/23/02	09:39:06	82.927
07/23/02	09:40:06	85.259
07/23/02	09:41:06	83.980
07/23/02	09:42:06	83.070
07/23/02	09:43:06	83.980
07/23/02	09:44:06	84.748
07/23/02	09:45:06	84.179
07/23/02	09:46:06	84.093
07/23/02	09:47:06	82.615
07/23/02	09:48:06	83.126
07/23/02	09:49:06	84.349
07/23/02	09:50:06	85.345
07/23/02	09:51:06	85.402
07/23/02	09:52:06	85.060
07/23/02	09:53:06	83.382
07/23/02	09:54:06	85.800
07/23/02	09:55:06	81.818
07/23/02	09:56:06	77.638
07/23/02	09:57:06	78.718
07/23/02	09:58:06	78.605
07/23/02	09:59:06	77.297
07/23/02	10:00:06	78.918
07/23/02	10:01:06	76.472
07/23/02	10:02:06	79.031
07/23/02	10:03:06	76.472
07/23/02	10:04:06	78.406
07/23/02	10:05:06	76.898
07/23/02	10:06:06	76.443
07/23/02	10:07:06	78.263
07/23/02	10:08:06	77.240
07/23/02	10:09:06	77.410
07/23/02	10:10:06	77.097
07/23/02	10:11:06	79.429
07/23/02	10:12:06	78.406
07/23/02	10:13:06	77.041
07/23/02	10:14:06	77.097
07/23/02	10:15:06	77.496
07/23/02	10:16:06	77.752
07/23/02	10:17:06	77.097
07/23/02	10:18:06	78.718
07/23/02	10:19:06	77.410
07/23/02	10:20:06	79.230

M. L. KING AND MITCHELL - NO. 7282 cont.

Date	Time	Pres (PSI)
07/23/02	10:21:06	86.226
07/23/02	10:22:06	85.345
07/23/02	10:23:06	85.089
07/23/02	10:24:06	85.259
07/23/02	10:25:06	85.316
07/23/02	10:26:06	85.146
07/23/02	10:27:06	84.861
07/23/02	10:28:06	85.771
07/23/02	10:29:06	85.060
07/23/02	10:30:06	82.216
07/23/02	10:31:06	82.927
07/23/02	10:32:06	84.292
07/23/02	10:33:06	83.326
07/23/02	10:34:06	81.363
07/23/02	10:35:06	86.169
07/23/02	10:36:06	85.345
07/23/02	10:37:06	85.060
07/23/02	10:38:06	85.316
07/23/02	10:39:06	85.259
07/23/02	10:40:06	84.406
07/23/02	10:41:06	83.326
07/23/02	10:42:06	87.079
07/23/02	10:43:06	85.316
07/23/02	10:44:06	86.027
07/23/02	10:45:06	85.601
07/23/02	10:46:06	83.894
07/23/02	10:47:06	83.439
07/23/02	10:48:06	84.179
07/23/02	10:49:06	81.847
07/23/02	10:50:06	81.250
07/23/02	10:51:06	81.591
07/23/02	10:52:06	83.013
07/23/02	10:53:06	83.724
07/23/02	10:54:06	83.781
07/23/02	10:55:06	81.961
07/23/02	10:56:06	82.671
07/23/02	10:57:06	81.904
07/23/02	10:58:06	83.326
07/23/02	10:59:06	82.927
07/23/02	11:00:06	80.140
07/23/02	11:01:06	80.681
07/23/02	11:02:06	81.050
07/23/02	11:03:06	80.595
07/23/02	11:04:06	82.728
07/23/02	11:05:06	81.449
07/23/02	11:06:06	56.878
07/23/02	11:07:06	85.345
07/23/02	11:08:06	82.302
07/23/02	11:09:06	81.107
07/23/02	11:10:06	81.306
07/23/02	11:11:06	81.250
07/23/02	11:12:06	81.392
07/23/02	11:13:06	81.818
07/23/02	11:14:06	80.851
07/23/02	11:15:06	81.761
07/23/02	11:16:06	80.994
07/23/02	11:17:06	82.074
07/23/02	11:18:06	81.562
07/23/02	11:19:06	80.396
07/23/02	11:20:06	79.373
07/23/02	11:21:06	81.250
07/23/02	11:22:06	80.851
07/23/02	11:23:06	82.017
07/23/02	11:24:06	81.306
07/23/02	11:25:06	80.681
07/23/02	11:26:06	83.013
07/23/02	11:27:06	81.562
07/23/02	11:28:06	82.728
07/23/02	11:29:06	82.302
07/23/02	11:30:06	82.671
07/23/02	11:31:06	80.908
07/23/02	11:32:06	83.126
07/23/02	11:33:06	84.150
07/23/02	11:34:06	82.728
07/23/02	11:35:06	83.326
07/23/02	11:36:06	83.269
07/23/02	11:37:06	83.070
07/23/02	11:38:06	83.183
07/23/02	11:39:06	82.728
07/23/02	11:40:06	82.017
07/23/02	11:41:06	84.150
07/23/02	11:42:06	82.472
07/23/02	11:43:06	83.269
07/23/02	11:44:06	82.984
07/23/02	11:45:06	82.927
07/23/02	11:46:06	83.582
07/23/02	11:47:06	83.439
07/23/02	11:48:06	82.558
07/23/02	11:49:06	84.037
07/23/02	11:50:06	82.472
07/23/02	11:51:06	83.695
07/23/02	11:52:06	83.439
07/23/02	11:53:06	82.074
07/23/02	11:54:06	83.837
07/23/02	11:55:06	82.359
07/23/02	11:56:06	82.529
07/23/02	11:57:06	82.529
07/23/02	11:58:06	82.984
07/23/02	11:59:06	84.093
07/23/02	12:00:06	83.382
07/23/02	12:01:06	83.468
07/23/02	12:02:06	82.814
07/23/02	12:03:06	83.382
07/23/02	12:04:06	82.416
07/23/02	12:05:06	83.837
07/23/02	12:06:06	81.818
07/23/02	12:07:06	83.724
07/23/02	12:08:06	82.814
07/23/02	12:09:06	83.724
07/23/02	12:10:06	83.781
07/23/02	12:11:06	83.724
07/23/02	12:12:06	82.814
07/23/02	12:13:06	83.582
07/23/02	12:14:06	83.724
07/23/02	12:15:06	83.837
07/23/02	12:16:06	81.904
07/23/02	12:17:06	82.728
07/23/02	12:18:06	82.416
07/23/02	12:19:06	81.107
07/23/02	12:20:06	83.582
07/23/02	12:21:06	83.382
07/23/02	12:22:06	80.425
07/23/02	12:23:06	83.837
07/23/02	12:24:06	82.814
07/23/02	12:25:06	82.927
07/23/02	12:26:06	81.505
07/23/02	12:27:06	83.013
07/23/02	12:28:06	82.359
07/23/02	12:29:06	82.416
07/23/02	12:30:06	81.250
07/23/02	12:31:06	83.439
07/23/02	12:32:06	83.525
07/23/02	12:33:06	82.160
07/23/02	12:34:06	83.269
07/23/02	12:35:06	82.871
07/23/02	12:36:06	82.728
07/23/02	12:37:06	83.980
07/23/02	12:38:06	81.363
07/23/02	12:39:06	83.894
07/23/02	12:40:06	82.103
07/23/02	12:41:06	83.582
07/23/02	12:42:06	81.705
07/23/02	12:43:06	83.525
07/23/02	12:44:06	84.292
07/23/02	12:45:06	84.093
07/23/02	12:46:06	83.781
07/23/02	12:47:06	83.582
07/23/02	12:48:06	84.890
07/23/02	12:49:06	83.724
07/23/02	12:50:06	83.980
07/23/02	12:51:06	83.525
07/23/02	12:52:06	85.402
07/23/02	12:53:06	84.236
07/23/02	12:54:06	83.923
07/23/02	12:55:06	84.093
07/23/02	12:56:06	82.359
07/23/02	12:57:06	82.671
07/23/02	12:58:06	81.961
07/23/02	12:59:06	81.449
07/23/02	13:00:06	82.160
07/23/02	13:01:06	81.449
07/23/02	13:02:06	83.326
07/23/02	13:03:06	83.781
07/23/02	13:04:06	83.525
07/23/02	13:05:06	82.416
07/23/02	13:06:06	82.359
07/23/02	13:07:06	80.994
07/23/02	13:08:06	81.818
07/23/02	13:09:06	83.923
07/23/02	13:10:06	59.209
07/23/02	13:11:06	61.485
07/23/02	13:12:06	58.584
07/23/02	13:13:06	57.418
07/23/02	13:14:06	56.650
07/23/02	13:15:06	55.740
07/23/02	13:16:06	53.835
07/23/02	13:17:06	51.986
07/23/02	13:18:06	50.678
07/23/02	13:19:06	52.953
07/23/02	13:20:06	53.579
07/23/02	13:21:06	57.987
07/23/02	13:22:06	71.865
07/23/02	13:23:06	80.738
07/23/02	13:24:06	81.761
07/23/02	13:25:06	81.904
07/23/02	13:26:06	82.359
07/23/02	13:27:06	82.757
07/23/02	13:28:06	80.226
07/23/02	13:29:06	82.671
07/23/02	13:30:06	80.795
07/23/02	13:31:06	81.363
07/23/02	13:32:06	80.738
07/23/02	13:33:06	81.193
07/23/02	13:34:06	81.392
07/23/02	13:35:06	82.814
07/23/02	13:36:06	80.851
07/23/02	13:37:06	80.795
07/23/02	13:38:06	80.140
07/23/02	13:39:06	81.107
07/23/02	13:40:06	78.349
07/23/02	13:41:06	78.804
07/23/02	13:42:06	79.230
07/23/02	13:43:06	80.340
07/23/02	13:44:06	87.933
07/23/02	13:45:06	87.279
07/23/02	13:46:06	82.302
07/23/02	13:47:06	83.724
07/23/02	13:48:06	83.013
07/23/02	13:49:06	80.396
07/23/02	13:50:06	81.648
07/23/02	13:51:06	81.136
07/23/02	13:52:06	80.795
07/23/02	13:53:06	81.505
07/23/02	13:54:06	83.525
07/23/02	13:55:06	82.302
07/23/02	13:56:06	81.961
07/23/02	13:57:06	83.240
07/23/02	13:58:06	80.197
07/23/02	13:59:06	83.439
07/23/02	14:00:06	81.050
07/23/02	14:01:06	79.941
07/23/02	14:02:06	82.103
07/23/02	14:03:06	81.505
07/23/02	14:04:06	83.468
07/23/02	14:05:06	81.505
07/23/02	14:06:06	82.416
07/23/02	14:07:06	81.136
07/23/02	14:08:06	81.591
07/23/02	14:09:06	82.927
07/23/02	14:10:06	81.961
07/23/02	14:11:06	83.695
07/23/02	14:12:06	83.326
07/23/02	14:13:06	82.871
07/23/02	14:14:06	82.615
07/23/02	14:15:06	82.416
07/23/02	14:16:06	82.216
07/23/02	14:17:06	82.529
07/23/02	14:18:06	81.761
07/23/02	14:19:06	82.757
07/23/02	14:20:06	81.705
07/23/02	14:21:06	83.724
07/23/02	14:22:06	83.183
07/23/02	14:23:06	83.013
07/23/02	14:24:06	82.160
07/23/02	14:25:06	83.382
07/23/02	14:26:06	82.927
07/23/02	14:27:06	82.671
07/23/02	14:28:06	82.529
07/23/02	14:29:06	83.013
07/23/02	14:30:06	83.013
07/23/02	14:31:06	83.183
07/23/02	14:32:06	82.671
07/23/02	14:33:06	81.306
07/23/02	14:34:06	82.814
07/23/02	14:35:06	83.269
07/23/02	14:36:06	83.240
07/23/02	14:37:06	81.847
07/23/02	14:38:06	83.070
07/23/02	14:39:06	82.814
07/23/02	14:40:06	82.927
07/23/02	14:41:06	82.927
07/23/02	14:42:06	83.894
07/23/02	14:43:06	83.468
07/23/02	14:44:06	83.525

M. L. KING AND MITCHELL - NO. 7282 cont.

Date	Time	Pres (PSI)
07/23/02	14:45:06	66.291
07/23/02	14:46:06	61.314
07/23/02	14:47:06	64.584
07/23/02	14:48:06	77.951
07/23/02	14:49:06	80.937
07/23/02	14:50:06	82.160
07/23/02	14:51:06	79.515
07/23/02	14:52:06	81.818
07/23/02	14:53:06	82.103
07/23/02	14:54:06	80.795
07/23/02	14:55:06	80.937
07/23/02	14:56:06	82.074
07/23/02	14:57:06	81.250
07/23/02	14:58:06	81.648
07/23/02	14:59:06	82.671
07/23/02	15:00:06	82.017
07/23/02	15:01:06	81.591
07/23/02	15:02:06	81.591
07/23/02	15:03:06	82.160
07/23/02	15:04:06	81.306
07/23/02	15:05:06	81.050
07/23/02	15:06:06	80.795
07/23/02	15:07:06	81.761
07/23/02	15:08:06	80.425
07/23/02	15:09:06	82.017
07/23/02	15:10:06	82.017
07/23/02	15:11:06	81.505
07/23/02	15:12:06	81.306
07/23/02	15:13:06	82.615
07/23/02	15:14:06	81.961
07/23/02	15:15:06	81.392
07/23/02	15:16:06	81.847
07/23/02	15:17:06	81.392
07/23/02	15:18:06	81.904
07/23/02	15:19:06	83.439
07/23/02	15:20:06	91.601
07/23/02	15:21:06	84.861
07/23/02	15:22:06	85.458
07/23/02	15:23:06	83.468
07/23/02	15:24:06	85.572
07/23/02	15:25:06	85.857
07/23/02	15:26:06	86.056
07/23/02	15:27:06	85.913
07/23/02	15:28:06	85.970
07/23/02	15:29:06	85.857
07/23/02	15:30:06	86.767
07/23/02	15:31:06	85.203
07/23/02	15:32:06	84.890
07/23/02	15:33:06	86.113
07/23/02	15:34:06	85.089
07/23/02	15:35:06	86.056
07/23/02	15:36:06	85.089
07/23/02	15:37:06	83.013
07/23/02	15:38:06	84.236
07/23/02	15:39:06	86.226
07/23/02	15:40:06	85.089
07/23/02	15:41:06	83.781
07/23/02	15:42:06	84.691
07/23/02	15:43:06	85.458
07/23/02	15:44:06	85.572
07/23/02	15:45:06	86.169
07/23/02	15:46:06	87.392
07/23/02	15:47:06	85.658
07/23/02	15:48:06	86.027
07/23/02	15:49:06	85.913
07/23/02	15:50:06	85.913
07/23/02	15:51:06	86.824
07/23/02	15:52:06	86.937
07/23/02	15:53:06	85.572
07/23/02	15:54:06	84.861
07/23/02	15:55:06	85.771
07/23/02	15:56:06	85.714
07/23/02	15:57:06	85.771
07/23/02	15:58:06	85.060
07/23/02	15:59:06	85.060
07/23/02	16:00:06	84.947
07/23/02	16:01:06	85.089
07/23/02	16:02:06	84.435
07/23/02	16:03:06	84.548
07/23/02	16:04:06	84.634
07/23/02	16:05:06	85.203
07/23/02	16:06:06	84.150
07/23/02	16:07:06	84.435
07/23/02	16:08:06	83.183
07/23/02	16:09:06	83.382
07/23/02	16:10:06	85.601
07/23/02	16:11:06	83.980
07/23/02	16:12:06	83.837
07/23/02	16:13:06	83.638
07/23/02	16:14:06	83.269
07/23/02	16:15:06	85.913
07/23/02	16:16:06	85.089
07/23/02	16:17:06	84.492
07/23/02	16:18:06	84.691
07/23/02	16:19:06	84.634
07/23/02	16:20:06	85.658
07/23/02	16:21:06	84.634
07/23/02	16:22:06	85.714
07/23/02	16:23:06	84.093
07/23/02	16:24:06	63.873
07/23/02	16:25:06	88.956
07/23/02	16:26:06	86.113
07/23/02	16:27:06	85.458
07/23/02	16:28:06	84.605
07/23/02	16:29:06	85.572
07/23/02	16:30:06	84.179
07/23/02	16:31:06	85.089
07/23/02	16:32:06	85.458
07/23/02	16:33:06	85.146
07/23/02	16:34:06	84.435
07/23/02	16:35:06	84.548
07/23/02	16:36:06	85.146
07/23/02	16:37:06	85.515
07/23/02	16:38:06	85.345
07/23/02	16:39:06	85.316
07/23/02	16:40:06	84.548
07/23/02	16:41:06	84.236
07/23/02	16:42:06	67.826
07/23/02	16:43:06	65.267
07/23/02	16:44:06	67.713
07/23/02	16:45:06	68.566
07/23/02	16:46:06	66.490
07/23/02	16:47:06	65.836
07/23/02	16:48:06	80.851
07/23/02	16:49:06	86.425
07/23/02	16:50:06	83.183
07/23/02	16:51:06	81.705
07/23/02	16:52:06	82.273
07/23/02	16:53:06	82.871
07/23/02	16:54:06	83.183
07/23/02	16:55:06	82.416
07/23/02	16:56:06	81.449
07/23/02	16:57:06	80.283
07/23/02	16:58:06	82.671
07/23/02	16:59:06	82.472
07/23/02	17:00:06	82.472
07/23/02	17:01:06	82.302
07/23/02	17:02:06	82.302
07/23/02	17:03:06	82.927
07/23/02	17:04:06	82.216
07/23/02	17:05:06	82.615
07/23/02	17:06:06	81.591
07/23/02	17:07:06	81.136
07/23/02	17:08:06	81.847
07/23/02	17:09:06	80.652
07/23/02	17:10:06	91.345
07/23/02	17:11:06	84.406
07/23/02	17:12:06	84.748
07/23/02	17:13:06	84.435
07/23/02	17:14:06	83.724
07/23/02	17:15:06	83.070
07/23/02	17:16:06	84.605
07/23/02	17:17:06	84.292
07/23/02	17:18:06	84.037
07/23/02	17:19:06	83.582
07/23/02	17:20:06	84.292
07/23/02	17:21:06	84.605
07/23/02	17:22:06	84.179
07/23/02	17:23:06	81.505
07/23/02	17:24:06	85.003
07/23/02	17:25:06	84.179
07/23/02	17:26:06	84.548
07/23/02	17:27:06	81.904
07/23/02	17:28:06	83.894
07/23/02	17:29:06	82.671
07/23/02	17:30:06	83.269
07/23/02	17:31:06	83.240
07/23/02	17:32:06	83.837
07/23/02	17:33:06	82.671
07/23/02	17:34:06	82.529
07/23/02	17:35:06	83.525
07/23/02	17:36:06	82.728
07/23/02	17:37:06	83.695
07/23/02	17:38:06	83.382
07/23/02	17:39:06	83.894
07/23/02	17:40:06	83.183
07/23/02	17:41:06	83.326
07/23/02	17:42:06	81.648
07/23/02	17:43:06	83.326
07/23/02	17:44:06	84.093
07/23/02	17:45:06	82.416
07/23/02	17:46:06	83.980
07/23/02	17:47:06	84.435
07/23/02	17:48:06	83.269
07/23/02	17:49:06	84.748
07/23/02	17:50:06	83.781
07/23/02	17:51:06	85.316
07/23/02	17:52:06	83.126
07/23/02	17:53:06	84.406
07/23/02	17:54:06	84.037
07/23/02	17:55:06	81.449
07/23/02	17:56:06	85.003
07/23/02	17:57:06	82.671
07/23/02	17:58:06	83.326
07/23/02	17:59:06	84.179
07/23/02	18:00:06	83.582
07/23/02	18:01:06	84.406
07/23/02	18:02:06	83.980
07/23/02	18:03:06	83.781
07/23/02	18:04:06	83.781
07/23/02	18:05:06	85.003
07/23/02	18:06:06	83.240
07/23/02	18:07:06	82.757
07/23/02	18:08:06	82.728
07/23/02	18:09:06	82.871
07/23/02	18:10:06	84.150
07/23/02	18:11:06	82.671
07/23/02	18:12:06	83.013
07/23/02	18:13:06	83.781
07/23/02	18:14:06	83.894
07/23/02	18:15:06	82.728
07/23/02	18:16:06	82.757
07/23/02	18:17:06	84.406
07/23/02	18:18:06	82.302
07/23/02	18:19:06	85.658
07/23/02	18:20:06	84.093
07/23/02	18:21:06	83.382
07/23/02	18:22:06	82.302
07/23/02	18:23:06	83.070
07/23/02	18:24:06	82.302
07/23/02	18:25:06	82.359
07/23/02	18:26:06	83.525
07/23/02	18:27:06	83.837
07/23/02	18:28:06	83.894
07/23/02	18:29:06	83.013
07/23/02	18:30:06	83.439
07/23/02	18:31:06	83.269
07/23/02	18:32:06	82.273
07/23/02	18:33:06	84.548
07/23/02	18:34:06	83.837
07/23/02	18:35:06	83.468
07/23/02	18:36:06	81.847
07/23/02	18:37:06	84.037
07/23/02	18:38:06	83.269
07/23/02	18:39:06	84.406
07/23/02	18:40:06	84.292
07/23/02	18:41:06	84.093
07/23/02	18:42:06	83.326
07/23/02	18:43:06	83.525
07/23/02	18:44:06	83.781
07/23/02	18:45:06	84.179
07/23/02	18:46:06	84.890
07/23/02	18:47:06	83.695
07/23/02	18:48:06	83.382
07/23/02	18:49:06	84.292
07/23/02	18:50:06	82.529
07/23/02	18:51:06	84.179
07/23/02	18:52:06	83.382
07/23/02	18:53:06	82.984
07/23/02	18:54:06	84.605
07/23/02	18:55:06	83.923
07/23/02	18:56:06	83.525
07/23/02	18:57:06	82.671
07/23/02	18:58:06	82.984
07/23/02	18:59:06	84.150
07/23/02	19:00:06	83.269
07/23/02	19:01:06	82.871
07/23/02	19:02:06	83.837
07/23/02	19:03:06	83.695
07/23/02	19:04:06	84.292
07/23/02	19:05:06	83.980
07/23/02	19:06:06	84.634
07/23/02	19:07:06	84.236
07/23/02	19:08:06	84.292

M. L. KING AND MITCHELL - NO. 7282 cont.

Date	Time	Pres (PSI)
07/23/02	19:09:06	84.093
07/23/02	19:10:06	84.037
07/23/02	19:11:06	85.003
07/23/02	19:12:06	84.947
07/23/02	19:13:06	82.814
07/23/02	19:14:06	84.037
07/23/02	19:15:06	82.984
07/23/02	19:16:06	83.638
07/23/02	19:17:06	83.781
07/23/02	19:18:06	83.638
07/23/02	19:19:06	84.093
07/23/02	19:20:06	83.894
07/23/02	19:21:06	85.203
07/23/02	19:22:06	83.183
07/23/02	19:23:06	83.695
07/23/02	19:24:06	84.435
07/23/02	19:25:06	83.638
07/23/02	19:26:06	84.093
07/23/02	19:27:06	83.070
07/23/02	19:28:06	83.013
07/23/02	19:29:06	83.013
07/23/02	19:30:06	84.037
07/23/02	19:31:06	83.070
07/23/02	19:32:06	83.980
07/23/02	19:33:06	83.923
07/23/02	19:34:06	83.326
07/23/02	19:35:06	82.814
07/23/02	19:36:06	83.382
07/23/02	19:37:06	83.183
07/23/02	19:38:06	83.525
07/23/02	19:39:06	83.638
07/23/02	19:40:06	83.582
07/23/02	19:41:06	83.894
07/23/02	19:42:06	83.269
07/23/02	19:43:06	84.292
07/23/02	19:44:06	83.695
07/23/02	19:45:06	83.894
07/23/02	19:46:06	84.179
07/23/02	19:47:06	83.638
07/23/02	19:48:06	82.871
07/23/02	19:49:06	83.439
07/23/02	19:50:06	83.183
07/23/02	19:51:06	83.269
07/23/02	19:52:06	83.724
07/23/02	19:53:06	83.070
07/23/02	19:54:06	83.837
07/23/02	19:55:06	83.837
07/23/02	19:56:06	83.269
07/23/02	19:57:06	83.183
07/23/02	19:58:06	83.240
07/23/02	19:59:06	82.871
07/23/02	20:00:06	82.757
07/23/02	20:01:06	83.126
07/23/02	20:02:06	84.037
07/23/02	20:03:06	83.582
07/23/02	20:04:06	84.292
07/23/02	20:05:06	84.548
07/23/02	20:06:06	83.525
07/23/02	20:07:06	83.240
07/23/02	20:08:06	84.150
07/23/02	20:09:06	83.126
07/23/02	20:10:06	83.582
07/23/02	20:11:06	84.349
07/23/02	20:12:06	82.984
07/23/02	20:13:06	81.847
07/23/02	20:14:06	83.183

Date	Time	Pres (PSI)
07/23/02	20:15:06	82.273
07/23/02	20:16:06	84.150
07/23/02	20:17:06	82.558
07/23/02	20:18:06	83.269
07/23/02	20:19:06	83.439
07/23/02	20:20:06	84.179
07/23/02	20:21:06	83.525
07/23/02	20:22:06	84.093
07/23/02	20:23:06	82.615
07/23/02	20:24:06	82.017
07/23/02	20:25:06	83.923
07/23/02	20:26:06	83.468
07/23/02	20:27:06	82.927
07/23/02	20:28:06	83.269
07/23/02	20:29:06	82.529
07/23/02	20:30:06	84.150
07/23/02	20:31:06	82.927
07/23/02	20:32:06	82.273
07/23/02	20:33:06	82.558
07/23/02	20:34:06	82.273
07/23/02	20:35:06	83.070
07/23/02	20:36:06	82.984
07/23/02	20:37:06	83.525
07/23/02	20:38:06	82.728
07/23/02	20:39:06	84.093
07/23/02	20:40:06	84.236
07/23/02	20:41:06	84.406
07/23/02	20:42:06	83.894
07/23/02	20:43:06	84.804
07/23/02	20:44:06	83.695
07/23/02	20:45:06	84.548
07/23/02	20:46:06	83.326
07/23/02	20:47:06	83.923
07/23/02	20:48:06	84.179
07/23/02	20:49:06	83.013
07/23/02	20:50:06	84.548
07/23/02	20:51:06	83.525
07/23/02	20:52:06	81.904
07/23/02	20:53:06	84.093
07/23/02	20:54:06	84.292
07/23/02	20:55:06	84.435
07/23/02	20:56:06	82.984
07/23/02	20:57:06	84.150
07/23/02	20:58:06	83.781
07/23/02	20:59:06	83.468
07/23/02	21:00:06	82.273
07/23/02	21:01:06	83.240
07/23/02	21:02:06	81.904
07/23/02	21:03:06	81.392
07/23/02	21:04:06	82.302
07/23/02	21:05:06	82.359
07/23/02	21:06:06	82.927
07/23/02	21:07:06	81.961
07/23/02	21:08:06	82.074
07/23/02	21:09:06	82.757
07/23/02	21:10:06	82.814
07/23/02	21:11:06	82.216
07/23/02	21:12:06	82.017
07/23/02	21:13:06	82.927
07/23/02	21:14:06	82.558
07/23/02	21:15:06	83.013
07/23/02	21:16:06	81.449
07/23/02	21:17:06	83.183
07/23/02	21:18:06	82.871
07/23/02	21:19:06	83.240
07/23/02	21:20:06	83.980

Date	Time	Pres (PSI)
07/23/02	21:21:06	82.728
07/23/02	21:22:06	83.695
07/23/02	21:23:06	83.638
07/23/02	21:24:06	83.468
07/23/02	21:25:06	82.615
07/23/02	21:26:06	83.269
07/23/02	21:27:06	82.728
07/23/02	21:28:06	82.757
07/23/02	21:29:06	83.070
07/23/02	21:30:06	83.382
07/23/02	21:31:06	83.126
07/23/02	21:32:06	83.183
07/23/02	21:33:06	83.525
07/23/02	21:34:06	82.671
07/23/02	21:35:06	82.984
07/23/02	21:36:06	83.695
07/23/02	21:37:06	83.240
07/23/02	21:38:06	83.269
07/23/02	21:39:06	84.179
07/23/02	21:40:06	83.695
07/23/02	21:41:06	83.638
07/23/02	21:42:06	83.070
07/23/02	21:43:06	83.439
07/23/02	21:44:06	83.382
07/23/02	21:45:06	83.638
07/23/02	21:46:06	84.748
07/23/02	21:47:06	83.525
07/23/02	21:48:06	59.551
07/23/02	21:49:06	61.371
07/23/02	21:50:06	64.101
07/23/02	21:51:06	63.418
07/23/02	21:52:06	63.191
07/23/02	21:53:06	62.907
07/23/02	21:54:06	62.651
07/23/02	21:55:06	62.452
07/23/02	21:56:06	62.281
07/23/02	21:57:06	62.196
07/23/02	21:58:06	71.324
07/23/02	21:59:06	79.941
07/23/02	22:00:06	81.250
07/23/02	22:01:06	80.738
07/23/02	22:02:06	80.283
07/23/02	22:03:06	79.941
07/23/02	22:04:06	79.629
07/23/02	22:05:06	80.396
07/23/02	22:06:06	79.970
07/23/02	22:07:06	80.226
07/23/02	22:08:06	80.226
07/23/02	22:09:06	80.795
07/23/02	22:10:06	80.994
07/23/02	22:11:06	82.216
07/23/02	22:12:06	80.340
07/23/02	22:13:06	79.771
07/23/02	22:14:06	80.283
07/23/02	22:15:06	80.084
07/23/02	22:16:06	80.738
07/23/02	22:17:06	81.705
07/23/02	22:18:06	81.761
07/23/02	22:19:06	81.363
07/23/02	22:20:06	90.435
07/23/02	22:21:06	82.615
07/23/02	22:22:06	84.890
07/23/02	22:23:06	84.037
07/23/02	22:24:06	83.837
07/23/02	22:25:06	85.003
07/23/02	22:26:06	84.349

Date	Time	Pres (PSI)
07/23/02	22:27:06	84.634
07/23/02	22:28:06	84.150
07/23/02	22:29:06	84.435
07/23/02	22:30:06	84.634
07/23/02	22:31:06	85.060
07/23/02	22:32:06	84.406
07/23/02	22:33:06	84.406
07/23/02	22:34:06	84.548
07/23/02	22:35:06	85.089
07/23/02	22:36:06	84.804
07/23/02	22:37:06	84.748
07/23/02	22:38:06	85.089
07/23/02	22:39:06	84.179
07/23/02	22:40:06	85.857
07/23/02	22:41:06	84.804
07/23/02	22:42:06	85.089
07/23/02	22:43:06	86.312
07/23/02	22:44:06	84.691
07/23/02	22:45:06	84.890
07/23/02	22:46:06	86.255
07/23/02	22:47:06	85.003
07/23/02	22:48:06	85.316
07/23/02	22:49:06	85.572
07/23/02	22:50:06	86.681
07/23/02	22:51:06	86.312
07/23/02	22:52:06	85.970
07/23/02	22:53:06	85.800
07/23/02	22:54:06	85.970
07/23/02	22:55:06	86.767
07/23/02	22:56:06	85.601
07/23/02	22:57:06	86.255
07/23/02	22:58:06	86.169
07/23/02	22:59:06	85.857
07/23/02	23:00:06	85.601
07/23/02	23:01:06	85.714
07/23/02	23:02:06	86.027
07/23/02	23:03:06	85.060
07/23/02	23:04:06	85.089
07/23/02	23:05:06	85.771
07/23/02	23:06:06	85.402
07/23/02	23:07:06	84.605
07/23/02	23:08:06	85.060
07/23/02	23:09:06	85.857
07/23/02	23:10:06	86.255
07/23/02	23:11:06	85.800
07/23/02	23:12:06	86.937
07/23/02	23:13:06	86.738
07/23/02	23:14:06	86.568
07/23/02	23:15:06	85.601
07/23/02	23:16:06	86.937
07/23/02	23:17:06	86.425
07/23/02	23:18:06	84.890
07/23/02	23:19:06	86.425
07/23/02	23:20:06	86.226
07/23/02	23:21:06	86.312
07/23/02	23:22:06	85.857
07/23/02	23:23:06	86.568
07/23/02	23:24:06	86.767
07/23/02	23:25:06	87.079
07/23/02	23:26:06	86.425
07/23/02	23:27:06	87.023
07/23/02	23:28:06	86.738
07/23/02	23:29:06	87.193
07/23/02	23:30:06	86.966
07/23/02	23:31:06	85.771
07/23/02	23:32:06	85.970

M. L. KING AND MITCHELL - NO. 7282 cont.

Date	Time	Pres (PSI)
07/23/02	23:33:06	87.222
07/23/02	23:34:06	85.800
07/23/02	23:35:06	87.279
07/23/02	23:36:06	86.511
07/23/02	23:37:06	86.369
07/23/02	23:38:06	86.738
07/23/02	23:39:06	87.136
07/23/02	23:40:06	87.478
07/23/02	23:41:06	86.966
07/23/02	23:42:06	87.904
07/23/02	23:43:06	87.535
07/23/02	23:44:06	87.136
07/23/02	23:45:06	88.245
07/23/02	23:46:06	87.648
07/23/02	23:47:06	88.046
07/23/02	23:48:06	87.847
07/23/02	23:49:06	87.734
07/23/02	23:50:06	87.193
07/23/02	23:51:06	87.279
07/23/02	23:52:06	88.501
07/23/02	23:53:06	87.648
07/23/02	23:54:06	88.501
07/23/02	23:55:06	87.392
07/23/02	23:56:06	89.156
07/23/02	23:57:06	88.103
07/23/02	23:58:06	88.103
07/23/02	23:59:06	88.245
07/24/02	00:00:06	88.388
07/24/02	00:01:06	87.904
07/24/02	00:02:06	87.535
07/24/02	00:03:06	88.103
07/24/02	00:04:06	89.156
07/24/02	00:05:06	88.587
07/24/02	00:06:06	87.591
07/24/02	00:07:06	88.189
07/24/02	00:08:06	88.900
07/24/02	00:09:06	88.103
07/24/02	00:10:06	88.103
07/24/02	00:11:06	89.156
07/24/02	00:12:06	88.757
07/24/02	00:13:06	88.245
07/24/02	00:14:06	88.388
07/24/02	00:15:06	88.501
07/24/02	00:16:06	88.302
07/24/02	00:17:06	89.013
07/24/02	00:18:06	88.245
07/24/02	00:19:06	89.269
07/24/02	00:20:06	89.013
07/24/02	00:21:06	89.298
07/24/02	00:22:06	88.814
07/24/02	00:23:06	88.757
07/24/02	00:24:06	89.667
07/24/02	00:25:06	88.900
07/24/02	00:26:06	89.070
07/24/02	00:27:06	88.956
07/24/02	00:28:06	89.298
07/24/02	00:29:06	89.667
07/24/02	00:30:06	89.554
07/24/02	00:31:06	89.667
07/24/02	00:32:06	89.810
07/24/02	00:33:06	89.724
07/24/02	00:34:06	89.525
07/24/02	00:35:06	89.724
07/24/02	00:36:06	89.411
07/24/02	00:37:06	88.900
07/24/02	00:38:06	89.923
07/24/02	00:39:06	89.099
07/24/02	00:40:06	89.866
07/24/02	00:41:06	89.468
07/24/02	00:42:06	89.355
07/24/02	00:43:06	89.667
07/24/02	00:44:06	89.554
07/24/02	00:45:06	89.611
07/24/02	00:46:06	89.724
07/24/02	00:47:06	89.525
07/24/02	00:48:06	89.667
07/24/02	00:49:06	90.066
07/24/02	00:50:06	89.980
07/24/02	00:51:06	89.980
07/24/02	00:52:06	89.554
07/24/02	00:53:06	89.554
07/24/02	00:54:06	90.122
07/24/02	00:55:06	88.701
07/24/02	00:56:06	90.179
07/24/02	00:57:06	89.013
07/24/02	00:58:06	89.923
07/24/02	00:59:06	89.724
07/24/02	01:00:06	88.587
07/24/02	01:01:06	89.099
07/24/02	01:02:06	88.587
07/24/02	01:03:06	89.411
07/24/02	01:04:06	89.212
07/24/02	01:05:06	89.923
07/24/02	01:06:06	89.468
07/24/02	01:07:06	88.843
07/24/02	01:08:06	89.525
07/24/02	01:09:06	88.644
07/24/02	01:10:06	89.298
07/24/02	01:11:06	89.099
07/24/02	01:12:06	89.099
07/24/02	01:13:06	88.701
07/24/02	01:14:06	89.070
07/24/02	01:15:06	76.842
07/24/02	01:16:06	78.320
07/24/02	01:17:06	78.008
07/24/02	01:18:06	90.322
07/24/02	01:19:06	89.611
07/24/02	01:20:06	87.677
07/24/02	01:21:06	89.611
07/24/02	01:22:06	88.189
07/24/02	01:23:06	88.843
07/24/02	01:24:06	89.554
07/24/02	01:25:06	88.359
07/24/02	01:26:06	88.501
07/24/02	01:27:06	89.611
07/24/02	01:28:06	89.099
07/24/02	01:29:06	88.814
07/24/02	01:30:06	89.099
07/24/02	01:31:06	88.814
07/24/02	01:32:06	88.587
07/24/02	01:33:06	87.677
07/24/02	01:34:06	87.734
07/24/02	01:35:06	88.701
07/24/02	01:36:06	89.667
07/24/02	01:37:06	88.814
07/24/02	01:38:06	88.501
07/24/02	01:39:06	88.558
07/24/02	01:40:06	88.814
07/24/02	01:41:06	88.701
07/24/02	01:42:06	88.701
07/24/02	01:43:06	88.558
07/24/02	01:44:06	88.900
07/24/02	01:45:06	87.990
07/24/02	01:46:06	89.013
07/24/02	01:47:06	88.843
07/24/02	01:48:06	88.046
07/24/02	01:49:06	88.757
07/24/02	01:50:06	88.302
07/24/02	01:51:06	88.814
07/24/02	01:52:06	88.245
07/24/02	01:53:06	87.990
07/24/02	01:54:06	88.843
07/24/02	01:55:06	89.212
07/24/02	01:56:06	88.900
07/24/02	01:57:06	88.701
07/24/02	01:58:06	88.814
07/24/02	01:59:06	88.900
07/24/02	02:00:06	89.070
07/24/02	02:01:06	91.345
07/24/02	02:02:06	88.501
07/24/02	02:03:06	90.378
07/24/02	02:04:06	88.900
07/24/02	02:05:06	89.554
07/24/02	02:06:06	89.667
07/24/02	02:07:06	88.843
07/24/02	02:08:06	89.468
07/24/02	02:09:06	88.757
07/24/02	02:10:06	89.667
07/24/02	02:11:06	88.900
07/24/02	02:12:06	89.156
07/24/02	02:13:06	88.956
07/24/02	02:14:06	89.355
07/24/02	02:15:06	88.103
07/24/02	02:16:06	72.576
07/24/02	02:17:06	79.941
07/24/02	02:18:06	79.117
07/24/02	02:19:06	80.681
07/24/02	02:20:06	80.084
07/24/02	02:21:06	80.140
07/24/02	02:22:06	80.681
07/24/02	02:23:06	80.539
07/24/02	02:24:06	80.738
07/24/02	02:25:06	80.226
07/24/02	02:26:06	80.539
07/24/02	02:27:06	89.525
07/24/02	02:28:06	91.032
07/24/02	02:29:06	87.847
07/24/02	02:30:06	89.099
07/24/02	02:31:06	89.156
07/24/02	02:32:06	88.644
07/24/02	02:33:06	88.843
07/24/02	02:34:06	88.644
07/24/02	02:35:06	88.501
07/24/02	02:36:06	89.355
07/24/02	02:37:06	88.814
07/24/02	02:38:06	88.900
07/24/02	02:39:06	88.644
07/24/02	02:40:06	88.302
07/24/02	02:41:06	89.013
07/24/02	02:42:06	88.757
07/24/02	02:43:06	89.013
07/24/02	02:44:06	89.525
07/24/02	02:45:06	88.900
07/24/02	02:46:06	89.156
07/24/02	02:47:06	89.156
07/24/02	02:48:06	89.156
07/24/02	02:49:06	89.099
07/24/02	02:50:06	88.900
07/24/02	02:51:06	88.445
07/24/02	02:52:06	88.445
07/24/02	02:53:06	88.445
07/24/02	02:54:06	88.103
07/24/02	02:55:06	88.701
07/24/02	02:56:06	88.701
07/24/02	02:57:06	88.189
07/24/02	02:58:06	91.943
07/24/02	02:59:06	88.900
07/24/02	03:00:06	89.298
07/24/02	03:01:06	89.554
07/24/02	03:02:06	89.298
07/24/02	03:03:06	89.611
07/24/02	03:04:06	89.810
07/24/02	03:05:06	89.411
07/24/02	03:06:06	89.810
07/24/02	03:07:06	89.099
07/24/02	03:08:06	89.099
07/24/02	03:09:06	88.843
07/24/02	03:10:06	88.843
07/24/02	03:11:06	89.753
07/24/02	03:12:06	89.753
07/24/02	03:13:06	89.099
07/24/02	03:14:06	89.753
07/24/02	03:15:06	89.753
07/24/02	03:16:06	88.701
07/24/02	03:17:06	89.724
07/24/02	03:18:06	88.956
07/24/02	03:19:06	89.355
07/24/02	03:20:06	88.558
07/24/02	03:21:06	89.753
07/24/02	03:22:06	88.701
07/24/02	03:23:06	89.099
07/24/02	03:24:06	88.644
07/24/02	03:25:06	88.956
07/24/02	03:26:06	89.355
07/24/02	03:27:06	89.212
07/24/02	03:28:06	89.013
07/24/02	03:29:06	88.445
07/24/02	03:30:06	89.611
07/24/02	03:31:06	89.611
07/24/02	03:32:06	89.411
07/24/02	03:33:06	89.724
07/24/02	03:34:06	89.525
07/24/02	03:35:06	88.843
07/24/02	03:36:06	89.866
07/24/02	03:37:06	89.269
07/24/02	03:38:06	89.099
07/24/02	03:39:06	89.611
07/24/02	03:40:06	89.525
07/24/02	03:41:06	89.554
07/24/02	03:42:06	89.667
07/24/02	03:43:06	89.810
07/24/02	03:44:06	89.298
07/24/02	03:45:06	89.554
07/24/02	03:46:06	89.468
07/24/02	03:47:06	89.269
07/24/02	03:48:06	90.066
07/24/02	03:49:06	89.355
07/24/02	03:50:06	89.355
07/24/02	03:51:06	89.156
07/24/02	03:52:06	89.212
07/24/02	03:53:06	89.411
07/24/02	03:54:06	89.212
07/24/02	03:55:06	78.861
07/24/02	03:56:06	82.017

M. L. KING AND MITCHELL - NO. 7282 cont.

Date	Time	Pres (PSI)
07/24/02	03:57:06	79.828
07/24/02	03:58:06	89.099
07/24/02	03:59:06	89.355
07/24/02	04:00:06	86.255
07/24/02	04:01:06	88.359
07/24/02	04:02:06	87.648
07/24/02	04:03:06	87.023
07/24/02	04:04:06	87.478
07/24/02	04:05:06	87.478
07/24/02	04:06:06	86.113
07/24/02	04:07:06	85.857
07/24/02	04:08:06	87.023
07/24/02	04:09:06	86.880
07/24/02	04:10:06	86.767
07/24/02	04:11:06	86.226
07/24/02	04:12:06	86.681
07/24/02	04:13:06	86.966
07/24/02	04:14:06	87.790
07/24/02	04:15:06	86.937
07/24/02	04:16:06	86.169
07/24/02	04:17:06	86.738
07/24/02	04:18:06	86.511
07/24/02	04:19:06	86.767
07/24/02	04:20:06	87.222
07/24/02	04:21:06	86.738
07/24/02	04:22:06	86.738
07/24/02	04:23:06	86.824
07/24/02	04:24:06	87.279
07/24/02	04:25:06	87.193
07/24/02	04:26:06	86.937
07/24/02	04:27:06	86.966
07/24/02	04:28:06	86.511
07/24/02	04:29:06	86.369
07/24/02	04:30:06	86.255
07/24/02	04:31:06	86.880
07/24/02	04:32:06	85.800
07/24/02	04:33:06	86.113
07/24/02	04:34:06	86.226
07/24/02	04:35:06	87.677
07/24/02	04:36:06	86.880
07/24/02	04:37:06	87.335
07/24/02	04:38:06	87.790
07/24/02	04:39:06	88.302
07/24/02	04:40:06	88.103
07/24/02	04:41:06	87.677
07/24/02	04:42:06	87.535
07/24/02	04:43:06	87.648
07/24/02	04:44:06	87.591
07/24/02	04:45:06	87.904
07/24/02	04:46:06	87.790
07/24/02	04:47:06	87.734
07/24/02	04:48:06	87.136
07/24/02	04:49:06	87.392
07/24/02	04:50:06	87.677
07/24/02	04:51:06	87.079
07/24/02	04:52:06	87.222
07/24/02	04:53:06	87.677
07/24/02	04:54:06	86.966
07/24/02	04:55:06	87.990
07/24/02	04:56:06	87.079
07/24/02	04:57:06	87.335
07/24/02	04:58:06	87.279
07/24/02	04:59:06	86.482
07/24/02	05:00:06	86.966
07/24/02	05:01:06	86.369
07/24/02	05:02:06	84.605
07/24/02	05:03:06	84.492
07/24/02	05:04:06	84.861
07/24/02	05:05:06	84.093
07/24/02	05:06:06	84.548
07/24/02	05:07:06	83.923
07/24/02	05:08:06	84.890
07/24/02	05:09:06	84.548
07/24/02	05:10:06	84.890
07/24/02	05:11:06	85.003
07/24/02	05:12:06	85.458
07/24/02	05:13:06	86.027
07/24/02	05:14:06	85.316
07/24/02	05:15:06	85.601
07/24/02	05:16:06	85.003
07/24/02	05:17:06	85.203
07/24/02	05:18:06	87.421
07/24/02	05:19:06	90.179
07/24/02	05:20:06	87.392
07/24/02	05:21:06	89.667
07/24/02	05:22:06	89.070
07/24/02	05:23:06	87.790
07/24/02	05:24:06	89.070
07/24/02	05:25:06	88.558
07/24/02	05:26:06	88.388
07/24/02	05:27:06	88.189
07/24/02	05:28:06	88.701
07/24/02	05:29:06	88.956
07/24/02	05:30:06	89.468
07/24/02	05:31:06	89.070
07/24/02	05:32:06	89.468
07/24/02	05:33:06	88.644
07/24/02	05:34:06	87.790
07/24/02	05:35:06	88.501
07/24/02	05:36:06	88.189
07/24/02	05:37:06	88.701
07/24/02	05:38:06	88.245
07/24/02	05:39:06	88.558
07/24/02	05:40:06	88.388
07/24/02	05:41:06	87.990
07/24/02	05:42:06	87.535
07/24/02	05:43:06	89.070
07/24/02	05:44:06	88.900
07/24/02	05:45:06	87.392
07/24/02	05:46:06	88.558
07/24/02	05:47:06	88.843
07/24/02	05:48:06	88.189
07/24/02	05:49:06	88.644
07/24/02	05:50:06	89.980
07/24/02	05:51:06	88.189
07/24/02	05:52:06	88.814
07/24/02	05:53:06	87.335
07/24/02	05:54:06	87.279
07/24/02	05:55:06	88.359
07/24/02	05:56:06	88.132
07/24/02	05:57:06	87.734
07/24/02	05:58:06	88.558
07/24/02	05:59:06	85.771
07/24/02	06:00:06	87.734
07/24/02	06:01:06	87.023
07/24/02	06:02:06	87.790
07/24/02	06:03:06	86.511
07/24/02	06:04:06	86.937
07/24/02	06:05:06	87.478
07/24/02	06:06:06	86.767
07/24/02	06:07:06	86.568
07/24/02	06:08:06	86.824
07/24/02	06:09:06	87.193
07/24/02	06:10:06	87.335
07/24/02	06:11:06	86.937
07/24/02	06:12:06	86.511
07/24/02	06:13:06	86.966
07/24/02	06:14:06	87.648
07/24/02	06:15:06	86.425
07/24/02	06:16:06	87.193
07/24/02	06:17:06	87.335
07/24/02	06:18:06	86.312
07/24/02	06:19:06	88.558
07/24/02	06:20:06	88.132
07/24/02	06:21:06	86.767
07/24/02	06:22:06	86.312
07/24/02	06:23:06	86.624
07/24/02	06:24:06	87.079
07/24/02	06:25:06	86.880
07/24/02	06:26:06	87.023
07/24/02	06:27:06	85.913
07/24/02	06:28:06	86.312
07/24/02	06:29:06	86.824
07/24/02	06:30:06	87.335
07/24/02	06:31:06	86.169
07/24/02	06:32:06	86.482
07/24/02	06:33:06	85.714
07/24/02	06:34:06	86.113
07/24/02	06:35:06	88.302
07/24/02	06:36:06	85.800
07/24/02	06:37:06	86.226
07/24/02	06:38:06	87.279
07/24/02	06:39:06	86.511
07/24/02	06:40:06	86.738
07/24/02	06:41:06	87.136
07/24/02	06:42:06	86.824
07/24/02	06:43:06	86.027
07/24/02	06:44:06	86.966
07/24/02	06:45:06	87.079
07/24/02	06:46:06	87.648
07/24/02	06:47:06	86.738
07/24/02	06:48:06	87.279
07/24/02	06:49:06	87.421
07/24/02	06:50:06	87.392
07/24/02	06:51:06	86.169
07/24/02	06:52:06	86.624
07/24/02	06:53:06	86.113
07/24/02	06:54:06	86.767
07/24/02	06:55:06	86.624
07/24/02	06:56:06	86.880
07/24/02	06:57:06	85.970
07/24/02	06:58:06	87.478
07/24/02	06:59:06	86.738
07/24/02	07:00:06	85.857
07/24/02	07:01:06	86.255
07/24/02	07:02:06	87.193
07/24/02	07:03:06	85.970
07/24/02	07:04:06	86.482
07/24/02	07:05:06	86.113
07/24/02	07:06:06	84.634
07/24/02	07:07:06	84.861
07/24/02	07:08:06	86.169
07/24/02	07:09:06	84.548
07/24/02	07:10:06	85.203
07/24/02	07:11:06	83.638
07/24/02	07:12:06	84.748
07/24/02	07:13:06	84.804
07/24/02	07:14:06	84.179
07/24/02	07:15:06	83.695
07/24/02	07:16:06	83.837
07/24/02	07:17:06	83.695
07/24/02	07:18:06	82.529
07/24/02	07:19:06	83.923
07/24/02	07:20:06	84.037
07/24/02	07:21:06	83.695
07/24/02	07:22:06	83.013
07/24/02	07:23:06	84.406
07/24/02	07:24:06	83.382
07/24/02	07:25:06	82.529
07/24/02	07:26:06	85.089
07/24/02	07:27:06	84.435
07/24/02	07:28:06	84.947
07/24/02	07:29:06	85.003
07/24/02	07:30:06	83.638
07/24/02	07:31:06	84.093
07/24/02	07:32:06	83.980
07/24/02	07:33:06	84.634
07/24/02	07:34:06	84.150
07/24/02	07:35:06	85.060
07/24/02	07:36:06	83.326
07/24/02	07:37:06	84.492
07/24/02	07:38:06	85.345
07/24/02	07:39:06	84.236
07/24/02	07:40:06	85.203
07/24/02	07:41:06	86.880
07/24/02	07:42:06	85.913
07/24/02	07:43:06	85.203
07/24/02	07:44:06	85.316
07/24/02	07:45:06	85.601
07/24/02	07:46:06	86.056
07/24/02	07:47:06	86.425
07/24/02	07:48:06	85.771
07/24/02	07:49:06	84.634
07/24/02	07:50:06	85.800
07/24/02	07:51:06	86.482
07/24/02	07:52:06	86.482
07/24/02	07:53:06	86.624
07/24/02	07:54:06	87.079
07/24/02	07:55:06	85.771
07/24/02	07:56:06	87.023
07/24/02	07:57:06	86.681
07/24/02	07:58:06	85.458
07/24/02	07:59:06	86.312
07/24/02	08:00:06	86.767
07/24/02	08:01:06	86.568
07/24/02	08:02:06	82.871
07/24/02	08:03:06	82.871
07/24/02	08:04:06	83.439
07/24/02	08:05:06	85.572
07/24/02	08:06:06	83.240
07/24/02	08:07:06	83.980
07/24/02	08:08:06	83.894
07/24/02	08:09:06	83.980
07/24/02	08:10:06	85.970
07/24/02	08:11:06	83.638
07/24/02	08:12:06	83.724
07/24/02	08:13:06	84.292
07/24/02	08:14:06	85.345
07/24/02	08:15:06	83.070
07/24/02	08:16:06	82.273
07/24/02	08:17:06	81.847
07/24/02	08:18:06	83.837
07/24/02	08:19:06	83.183
07/24/02	08:20:06	84.748

M. L. KING AND MITCHELL - NO. 7282 cont.

Date	Time	Pres (PSI)
07/24/02	08:21:06	84.406
07/24/02	08:22:06	84.605
07/24/02	08:23:06	68.225
07/24/02	08:24:06	69.447
07/24/02	08:25:06	71.154
07/24/02	08:26:06	69.248
07/24/02	08:27:06	68.822
07/24/02	08:28:06	67.570
07/24/02	08:29:06	82.359
07/24/02	08:30:06	87.193
07/24/02	08:31:06	83.126
07/24/02	08:32:06	83.326
07/24/02	08:33:06	83.240
07/24/02	08:34:06	83.269
07/24/02	08:35:06	83.525
07/24/02	08:36:06	83.183
07/24/02	08:37:06	82.558
07/24/02	08:38:06	82.103
07/24/02	08:39:06	81.961
07/24/02	08:40:06	82.529
07/24/02	08:41:06	82.359
07/24/02	08:42:06	82.871
07/24/02	08:43:06	83.240
07/24/02	08:44:06	81.818
07/24/02	08:45:06	83.439
07/24/02	08:46:06	80.425
07/24/02	08:47:06	79.941
07/24/02	08:48:06	80.425
07/24/02	08:49:06	80.994
07/24/02	08:50:06	80.595
07/24/02	08:51:06	80.283
07/24/02	08:52:06	80.738
07/24/02	08:53:06	78.150
07/24/02	08:54:06	79.828
07/24/02	08:55:06	79.259
07/24/02	08:56:06	80.340
07/24/02	08:57:06	80.340
07/24/02	08:58:06	80.851
07/24/02	08:59:06	83.240
07/24/02	09:00:06	81.761
07/24/02	09:01:06	81.107
07/24/02	09:02:06	90.976
07/24/02	09:03:06	87.279
07/24/02	09:04:06	81.505
07/24/02	09:05:06	84.947
07/24/02	09:06:06	83.525
07/24/02	09:07:06	84.150
07/24/02	09:08:06	84.861
07/24/02	09:09:06	83.439
07/24/02	09:10:06	86.027
07/24/02	09:11:06	85.003
07/24/02	09:12:06	84.691
07/24/02	09:13:06	83.070
07/24/02	09:14:06	83.781
07/24/02	09:15:06	84.634
07/24/02	09:16:06	82.615
07/24/02	09:17:06	84.037
07/24/02	09:18:06	83.781
07/24/02	09:19:06	80.681
07/24/02	09:20:06	75.761
07/24/02	09:21:06	75.021
07/24/02	09:22:06	76.984
07/24/02	09:23:06	75.931
07/24/02	09:24:06	76.187
07/24/02	09:25:06	75.732
07/24/02	09:26:06	76.074
07/24/02	09:27:06	75.221
07/24/02	09:28:06	73.600
07/24/02	09:29:06	73.799
07/24/02	09:30:06	74.367
07/24/02	09:31:06	74.197
07/24/02	09:32:06	73.685
07/24/02	09:33:06	73.998
07/24/02	09:34:06	76.244
07/24/02	09:35:06	76.131
07/24/02	09:36:06	76.785
07/24/02	09:37:06	76.529
07/24/02	09:38:06	75.988
07/24/02	09:39:06	77.041
07/24/02	09:40:06	75.732
07/24/02	09:41:06	77.353
07/24/02	09:42:06	76.443
07/24/02	09:43:06	85.458
07/24/02	09:44:06	83.980
07/24/02	09:45:06	84.150
07/24/02	09:46:06	82.984
07/24/02	09:47:06	82.416
07/24/02	09:48:06	83.126
07/24/02	09:49:06	85.003
07/24/02	09:50:06	84.435
07/24/02	09:51:06	85.060
07/24/02	09:52:06	83.980
07/24/02	09:53:06	84.349
07/24/02	09:54:06	83.980
07/24/02	09:55:06	83.923
07/24/02	09:56:06	85.572
07/24/02	09:57:06	84.093
07/24/02	09:58:06	83.695
07/24/02	09:59:06	83.126
07/24/02	10:00:06	84.150
07/24/02	10:01:06	84.406
07/24/02	10:02:06	83.468
07/24/02	10:03:06	83.269
07/24/02	10:04:06	84.179
07/24/02	10:05:06	82.017
07/24/02	10:06:06	67.258
07/24/02	10:07:06	69.192
07/24/02	10:08:06	68.281
07/24/02	10:09:06	68.623
07/24/02	10:10:06	69.846
07/24/02	10:11:06	69.533
07/24/02	10:12:06	70.158
07/24/02	10:13:06	70.500
07/24/02	10:14:06	68.936
07/24/02	10:15:06	70.158
07/24/02	10:16:06	65.978
07/24/02	10:17:06	67.514
07/24/02	10:18:06	67.599
07/24/02	10:19:06	66.348
07/24/02	10:20:06	66.234
07/24/02	10:21:06	66.547
07/24/02	10:22:06	66.348
07/24/02	10:23:06	72.689
07/24/02	10:24:06	85.970
07/24/02	10:25:06	86.767
07/24/02	10:26:06	83.269
07/24/02	10:27:06	83.183
07/24/02	10:28:06	83.638
07/24/02	10:29:06	82.359
07/24/02	10:30:06	84.691
07/24/02	10:31:06	84.691
07/24/02	10:32:06	84.406
07/24/02	10:33:06	84.150
07/24/02	10:34:06	83.382
07/24/02	10:35:06	83.837
07/24/02	10:36:06	82.671
07/24/02	10:37:06	83.638
07/24/02	10:38:06	84.093
07/24/02	10:39:06	82.216
07/24/02	10:40:06	83.638
07/24/02	10:41:06	82.216
07/24/02	10:42:06	82.927
07/24/02	10:43:06	83.980
07/24/02	10:44:06	83.126
07/24/02	10:45:06	82.814
07/24/02	10:46:06	84.292
07/24/02	10:47:06	83.183
07/24/02	10:48:06	83.638
07/24/02	10:49:06	82.757
07/24/02	10:50:06	83.582
07/24/02	10:51:06	83.638
07/24/02	10:52:06	82.302
07/24/02	10:53:06	79.941
07/24/02	10:54:06	79.970
07/24/02	10:55:06	81.193
07/24/02	10:56:06	82.302
07/24/02	10:57:06	80.937
07/24/02	10:58:06	83.382
07/24/02	10:59:06	84.435
07/24/02	11:00:06	84.292
07/24/02	11:01:06	47.379
07/24/02	11:02:06	45.047
07/24/02	11:03:06	40.895
07/24/02	11:04:06	40.895
07/24/02	11:05:06	41.208
07/24/02	11:06:06	42.971
07/24/02	11:07:06	43.625
07/24/02	11:08:06	43.227
07/24/02	11:09:06	43.028
07/24/02	11:10:06	43.227
07/24/02	11:11:06	42.459
07/24/02	11:12:06	41.947
07/24/02	11:13:06	41.720
07/24/02	11:14:06	41.606
07/24/02	11:15:06	41.919
07/24/02	11:16:06	40.838
07/24/02	11:17:06	40.753
07/24/02	11:18:06	40.895
07/24/02	11:19:06	41.265
07/24/02	11:20:06	41.805
07/24/02	11:21:06	42.175
07/24/02	11:22:06	47.180
07/24/02	11:23:06	49.057
07/24/02	11:24:06	52.242
07/24/02	11:25:06	55.399
07/24/02	11:26:06	58.044
07/24/02	11:27:06	67.144
07/24/02	11:28:06	75.277
07/24/02	11:29:06	82.558
07/24/02	11:30:06	82.416
07/24/02	11:31:06	81.961
07/24/02	11:32:06	80.539
07/24/02	11:33:06	82.273
07/24/02	11:34:06	82.927
07/24/02	11:35:06	81.591
07/24/02	11:36:06	82.558
07/24/02	11:37:06	82.757
07/24/02	11:38:06	84.804
07/24/02	11:39:06	80.027
07/24/02	11:40:06	83.126
07/24/02	11:41:06	83.326
07/24/02	11:42:06	83.980
07/24/02	11:43:06	83.439
07/24/02	11:44:06	82.927
07/24/02	11:45:06	82.671
07/24/02	11:46:06	84.037
07/24/02	11:47:06	82.216
07/24/02	11:48:06	83.240
07/24/02	11:49:06	83.923
07/24/02	11:50:06	83.695
07/24/02	11:51:06	82.728
07/24/02	11:52:06	83.980
07/24/02	11:53:06	84.179
07/24/02	11:54:06	83.326
07/24/02	11:55:06	84.605
07/24/02	11:56:06	84.492
07/24/02	11:57:06	83.894
07/24/02	11:58:06	82.529
07/24/02	11:59:06	84.236
07/24/02	12:00:06	83.525
07/24/02	12:01:06	83.382
07/24/02	12:02:06	83.382
07/24/02	12:03:06	83.439
07/24/02	12:04:06	83.183
07/24/02	12:05:06	84.179
07/24/02	12:06:06	83.269
07/24/02	12:07:06	82.927
07/24/02	12:08:06	82.984
07/24/02	12:09:06	84.492
07/24/02	12:10:06	84.179
07/24/02	12:11:06	82.814
07/24/02	12:12:06	82.814
07/24/02	12:13:06	82.017
07/24/02	12:14:06	81.818
07/24/02	12:15:06	81.363
07/24/02	12:16:06	58.584
07/24/02	12:17:06	49.711
07/24/02	12:18:06	55.996
07/24/02	12:19:06	62.651
07/24/02	12:20:06	80.908
07/24/02	12:21:06	88.814
07/24/02	12:22:06	86.056
07/24/02	12:23:06	82.615
07/24/02	12:24:06	81.562
07/24/02	12:25:06	83.240
07/24/02	12:26:06	82.671
07/24/02	12:27:06	82.160
07/24/02	12:28:06	82.160
07/24/02	12:29:06	83.269
07/24/02	12:30:06	82.273
07/24/02	12:31:06	82.273
07/24/02	12:32:06	83.126
07/24/02	12:33:06	83.582
07/24/02	12:34:06	83.582
07/24/02	12:35:06	83.695
07/24/02	12:36:06	81.591
07/24/02	12:37:06	82.558
07/24/02	12:38:06	82.558
07/24/02	12:39:06	81.904
07/24/02	12:40:06	82.416
07/24/02	12:41:06	83.126
07/24/02	12:42:06	82.529
07/24/02	12:43:06	82.558
07/24/02	12:44:06	82.216

M. L. KING AND MITCHELL - NO. 7282 cont.

Date	Time	Pres (PSI)	Date	Time	Pres (PSI)	Date	Time	Pres (PSI)	Date	Time	Pres (PSI)
07/24/02	12:45:06	82.416	07/24/02	13:51:06	82.757	07/24/02	14:57:06	-0.597			
07/24/02	12:46:06	82.273	07/24/02	13:52:06	83.468	07/24/02	14:58:06	-0.540			
07/24/02	12:47:06	82.871	07/24/02	13:53:06	82.558	07/24/02	14:59:06	-0.597			
07/24/02	12:48:06	82.103	07/24/02	13:54:06	82.558	07/24/02	15:00:06	-0.597			
07/24/02	12:49:06	82.273	07/24/02	13:55:06	82.814	07/24/02	15:01:06	-0.654			
07/24/02	12:50:06	82.472	07/24/02	13:56:06	82.984	07/24/02	15:02:06	-0.597			
07/24/02	12:51:06	83.240	07/24/02	13:57:06	82.359	07/24/02	15:03:06	-0.597			
07/24/02	12:52:06	81.818	07/24/02	13:58:06	81.392	07/24/02	15:04:06	-0.597			
07/24/02	12:53:06	81.449	07/24/02	13:59:06	81.250	07/24/02	15:05:06	-0.597			
07/24/02	12:54:06	80.539	07/24/02	14:00:06	82.359	07/24/02	15:06:06	-0.540			
07/24/02	12:55:06	81.250	07/24/02	14:01:06	83.070	07/24/02	15:07:06	-0.540			
07/24/02	12:56:06	81.306	07/24/02	14:02:06	81.591	07/24/02	15:08:06	-0.540			
07/24/02	12:57:06	83.126	07/24/02	14:03:06	82.757	07/24/02	15:09:06	-0.540			
07/24/02	12:58:06	81.562	07/24/02	14:04:06	82.529	07/24/02	15:10:06	-0.540			
07/24/02	12:59:06	81.193	07/24/02	14:05:06	82.757	07/24/02	15:11:06	-0.540			
07/24/02	13:00:06	79.742	07/24/02	14:06:06	81.961	07/24/02	15:12:06	-0.540			
07/24/02	13:01:06	79.685	07/24/02	14:07:06	81.306	07/24/02	15:13:06	-0.540			
07/24/02	13:02:06	78.263	07/24/02	14:08:06	80.681	07/24/02	15:14:06	-0.540			
07/24/02	13:03:06	78.150	07/24/02	14:09:06	81.250	07/24/02	15:15:06	-0.540			
07/24/02	13:04:06	78.918	07/24/02	14:10:06	82.529	07/24/02	15:16:06	-0.540			
07/24/02	13:05:06	78.804	07/24/02	14:11:06	82.472	07/24/02	15:17:06	-0.597			
07/24/02	13:06:06	80.396	07/24/02	14:12:06	81.306	07/24/02	15:18:06	-0.597			
07/24/02	13:07:06	79.174	07/24/02	14:13:06	81.136	07/24/02	15:19:06	-0.540			
07/24/02	13:08:06	79.060	07/24/02	14:14:06	82.472	07/24/02	15:20:06	-0.540			
07/24/02	13:09:06	78.576	07/24/02	14:15:06	81.505	07/24/02	15:21:06	-0.597			
07/24/02	13:10:06	78.861	07/24/02	14:16:06	81.193	07/24/02	15:22:06	-0.540			
07/24/02	13:11:06	79.060	07/24/02	14:17:06	80.283	07/24/02	15:23:06	-0.540			
07/24/02	13:12:06	78.064	07/24/02	14:18:06	81.363	07/24/02	15:24:06	-0.597			
07/24/02	13:13:06	78.605	07/24/02	14:19:06	81.648	07/24/02	15:25:06	-0.597			
07/24/02	13:14:06	79.629	07/24/02	14:20:06	81.449	07/24/02	15:26:06	-0.540			
07/24/02	13:15:06	79.742	07/24/02	14:21:06	82.671	07/24/02	15:27:06	-0.540			
07/24/02	13:16:06	78.463	07/24/02	14:22:06	82.927	07/24/02	15:28:06	-0.654			
07/24/02	13:17:06	82.160	07/24/02	14:23:06	82.103	07/24/02	15:29:06	-0.654			
07/24/02	13:18:06	81.505	07/24/02	14:24:06	80.795	07/24/02	15:30:06	-0.597			
07/24/02	13:19:06	80.396	07/24/02	14:25:06	81.107	07/24/02	15:31:06	-0.540			
07/24/02	13:20:06	79.884	07/24/02	14:26:06	82.216	07/24/02	15:32:06	-0.654			
07/24/02	13:21:06	80.738	07/24/02	14:27:06	82.273	07/24/02	15:33:06	-0.597			
07/24/02	13:22:06	80.140	07/24/02	14:28:06	79.941	07/24/02	15:34:06	-0.597			
07/24/02	13:23:06	83.126	07/24/02	14:29:06	79.486	07/24/02	15:35:06	-0.597			
07/24/02	13:24:06	83.183	07/24/02	14:30:06	-0.483	07/24/02	15:36:06	-0.654			
07/24/02	13:25:06	81.818	07/24/02	14:31:06	-0.540	07/24/02	15:37:06	-0.597			
07/24/02	13:26:06	83.326	07/24/02	14:32:06	-0.483	07/24/02	15:38:06	-0.597			
07/24/02	13:27:06	82.871	07/24/02	14:33:06	-0.483	07/24/02	15:39:06	-0.597			
07/24/02	13:28:06	82.615	07/24/02	14:34:06	-0.483	07/24/02	15:40:06	-0.654			
07/24/02	13:29:06	82.416	07/24/02	14:35:06	-0.483	07/24/02	15:41:06	-0.654			
07/24/02	13:30:06	81.761	07/24/02	14:36:06	-0.540	07/24/02	15:42:06	-0.654			
07/24/02	13:31:06	81.562	07/24/02	14:37:06	-0.540	07/24/02	15:43:06	-0.654			
07/24/02	13:32:06	82.615	07/24/02	14:38:06	-0.540	07/24/02	15:44:06	-0.597			
07/24/02	13:33:06	82.728	07/24/02	14:39:06	-0.597	07/24/02	15:45:06	-0.654			
07/24/02	13:34:06	82.359	07/24/02	14:40:06	-0.540	07/24/02	15:46:06	-0.654			
07/24/02	13:35:06	82.671	07/24/02	14:41:06	-0.597	07/24/02	15:47:06	-0.654			
07/24/02	13:36:06	81.648	07/24/02	14:42:06	-0.597	07/24/02	15:48:06	-0.654			
07/24/02	13:37:06	82.529	07/24/02	14:43:06	-0.597	07/24/02	15:49:06	-0.597			
07/24/02	13:38:06	83.326	07/24/02	14:44:06	-0.540	07/24/02	15:50:06	-0.597			
07/24/02	13:39:06	83.638	07/24/02	14:45:06	-0.597	07/24/02	15:51:06	-0.597			
07/24/02	13:40:06	82.103	07/24/02	14:46:06	-0.597	07/24/02	15:52:06	-0.654			
07/24/02	13:41:06	82.871	07/24/02	14:47:06	-0.540	07/24/02	15:53:06	-0.654			
07/24/02	13:42:06	82.216	07/24/02	14:48:06	-0.540	07/24/02	15:54:06	-0.654			
07/24/02	13:43:06	79.117	07/24/02	14:49:06	-0.540	07/24/02	15:55:06	-0.654			
07/24/02	13:44:06	79.742	07/24/02	14:50:06	-0.597	07/24/02	15:56:06	-0.683			
07/24/02	13:45:06	80.226	07/24/02	14:51:06	-0.597	07/24/02	15:57:06	-0.654			
07/24/02	13:46:06	81.648	07/24/02	14:52:06	-0.597	07/24/02	15:58:06	-0.654			
07/24/02	13:47:06	81.449	07/24/02	14:53:06	-0.597	07/24/02	15:59:06	-0.654			
07/24/02	13:48:06	82.160	07/24/02	14:54:06	-0.654	07/24/02	16:00:06	-0.654			
07/24/02	13:49:06	84.236	07/24/02	14:55:06	-0.597	07/24/02	16:01:06	-0.654			
07/24/02	13:50:06	82.529	07/24/02	14:56:06	-0.654	07/24/02	16:02:06	-0.654			

SOUTHBOUND ACCESS ROAD OF IH35 - NO. 7492

Date	Time	Pres (PSI)
07/22/02	09:01:30	0.142
07/22/02	09:02:30	0.142
07/22/02	09:03:30	0.142
07/22/02	09:04:30	0.057
07/22/02	09:05:30	0.057
07/22/02	09:06:30	0.142
07/22/02	09:07:30	0.142
07/22/02	09:08:30	0.142
07/22/02	09:09:30	0.057
07/22/02	09:10:30	0.057
07/22/02	09:11:30	0.057
07/22/02	09:12:30	0.057
07/22/02	09:13:30	0.000
07/22/02	09:14:30	0.000
07/22/02	09:15:30	0.057
07/22/02	09:16:30	0.142
07/22/02	09:17:30	0.057
07/22/02	09:18:30	0.000
07/22/02	09:19:30	0.000
07/22/02	09:20:30	0.000
07/22/02	09:21:30	0.057
07/22/02	09:22:30	0.057
07/22/02	09:23:30	0.000
07/22/02	09:24:30	0.000
07/22/02	09:25:30	0.000
07/22/02	09:26:30	0.000
07/22/02	09:27:30	0.000
07/22/02	09:28:30	0.000
07/22/02	09:29:30	0.000
07/22/02	09:30:30	0.000
07/22/02	09:31:30	0.000
07/22/02	09:32:30	0.000
07/22/02	09:33:30	0.000
07/22/02	09:34:30	-0.057
07/22/02	09:35:30	-0.057
07/22/02	09:36:30	0.000
07/22/02	09:37:30	0.000
07/22/02	09:38:30	-0.057
07/22/02	09:39:30	-0.057
07/22/02	09:40:30	-0.057
07/22/02	09:41:30	-0.057
07/22/02	09:42:30	-0.057
07/22/02	09:43:30	-0.057
07/22/02	09:44:30	-0.057
07/22/02	09:45:30	-0.142
07/22/02	09:46:30	-0.057
07/22/02	09:47:30	-0.057
07/22/02	09:48:30	-0.142
07/22/02	09:49:30	-0.057
07/22/02	09:50:30	-0.057
07/22/02	09:51:30	-0.142
07/22/02	09:52:30	-0.142
07/22/02	09:53:30	-0.057
07/22/02	09:54:30	-0.142
07/22/02	09:55:30	-0.142
07/22/02	09:56:30	-0.228
07/22/02	09:57:30	-0.142
07/22/02	09:58:30	-0.142
07/22/02	09:59:30	-0.142
07/22/02	10:00:30	-0.142
07/22/02	10:01:30	-0.057
07/22/02	10:02:30	-0.057
07/22/02	10:03:30	-0.057
07/22/02	10:04:30	-0.142
07/22/02	10:05:30	-0.057
07/22/02	10:06:30	-0.057
07/22/02	10:07:30	-0.142
07/22/02	10:08:30	-0.142
07/22/02	10:09:30	-0.142
07/22/02	10:10:30	-0.142
07/22/02	10:11:30	-0.228
07/22/02	10:12:30	-0.142
07/22/02	10:13:30	-0.142
07/22/02	10:14:30	-0.142
07/22/02	10:15:30	-0.228
07/22/02	10:16:30	-0.228
07/22/02	10:17:30	-0.228
07/22/02	10:18:30	92.796
07/22/02	10:19:30	93.905
07/22/02	10:20:30	93.109
07/22/02	10:21:30	93.819
07/22/02	10:22:30	93.734
07/22/02	10:23:30	93.421
07/22/02	10:24:30	93.251
07/22/02	10:25:30	93.421
07/22/02	10:26:30	92.710
07/22/02	10:27:30	92.796
07/22/02	10:28:30	92.796
07/22/02	10:29:30	92.483
07/22/02	10:30:30	92.483
07/22/02	10:31:30	92.625
07/22/02	10:32:30	91.914
07/22/02	10:33:30	93.251
07/22/02	10:34:30	91.374
07/22/02	10:35:30	93.194
07/22/02	10:36:30	92.796
07/22/02	10:37:30	93.336
07/22/02	10:38:30	92.398
07/22/02	10:39:30	92.170
07/22/02	10:40:30	91.687
07/22/02	10:41:30	92.227
07/22/02	10:42:30	92.881
07/22/02	10:43:30	92.625
07/22/02	10:44:30	91.857
07/22/02	10:45:30	92.710
07/22/02	10:46:30	93.421
07/22/02	10:47:30	92.796
07/22/02	10:48:30	91.288
07/22/02	10:49:30	91.999
07/22/02	10:50:30	91.857
07/22/02	10:51:30	92.881
07/22/02	10:52:30	92.938
07/22/02	10:53:30	92.625
07/22/02	10:54:30	91.516
07/22/02	10:55:30	91.146
07/22/02	10:56:30	92.881
07/22/02	10:57:30	90.265
07/22/02	10:58:30	91.203
07/22/02	10:59:30	91.914
07/22/02	11:00:30	92.796
07/22/02	11:01:30	91.459
07/22/02	11:02:30	91.203
07/22/02	11:03:30	91.914
07/22/02	11:04:30	90.890
07/22/02	11:05:30	90.833
07/22/02	11:06:30	91.516
07/22/02	11:07:30	91.857
07/22/02	11:08:30	92.796
07/22/02	11:09:30	92.710
07/22/02	11:10:30	92.085
07/22/02	11:11:30	92.483
07/22/02	11:12:30	92.398
07/22/02	11:13:30	88.075
07/22/02	11:14:30	95.156
07/22/02	11:15:30	92.796
07/22/02	11:16:30	91.288
07/22/02	11:17:30	90.663
07/22/02	11:18:30	91.857
07/22/02	11:19:30	91.999
07/22/02	11:20:30	91.857
07/22/02	11:21:30	90.492
07/22/02	11:22:30	91.857
07/22/02	11:23:30	88.132
07/22/02	11:24:30	88.388
07/22/02	11:25:30	92.483
07/22/02	11:26:30	90.890
07/22/02	11:27:30	90.748
07/22/02	11:28:30	90.179
07/22/02	11:29:30	88.928
07/22/02	11:30:30	89.810
07/22/02	11:31:30	91.459
07/22/02	11:32:30	90.663
07/22/02	11:33:30	90.577
07/22/02	11:34:30	88.928
07/22/02	11:35:30	90.833
07/22/02	11:36:30	90.492
07/22/02	11:37:30	88.843
07/22/02	11:38:30	88.928
07/22/02	11:39:30	91.914
07/22/02	11:40:30	90.435
07/22/02	11:41:30	91.516
07/22/02	11:42:30	90.350
07/22/02	11:43:30	90.577
07/22/02	11:44:30	90.890
07/22/02	11:45:30	91.772
07/22/02	11:46:30	88.786
07/22/02	11:47:30	90.492
07/22/02	11:48:30	87.990
07/22/02	11:49:30	87.421
07/22/02	11:50:30	87.762
07/22/02	11:51:30	90.350
07/22/02	11:52:30	89.554
07/22/02	11:53:30	89.554
07/22/02	11:54:30	90.179
07/22/02	11:55:30	91.146
07/22/02	11:56:30	89.411
07/22/02	11:57:30	87.904
07/22/02	11:58:30	89.724
07/22/02	11:59:30	89.866
07/22/02	12:00:30	91.772
07/22/02	12:01:30	87.677
07/22/02	12:02:30	86.966
07/22/02	12:03:30	85.857
07/22/02	12:04:30	89.411
07/22/02	12:05:30	87.108
07/22/02	12:06:30	88.132
07/22/02	12:07:30	87.990
07/22/02	12:08:30	87.506
07/22/02	12:09:30	84.918
07/22/02	12:10:30	85.544
07/22/02	12:11:30	88.445
07/22/02	12:12:30	88.388
07/22/02	12:13:30	86.880
07/22/02	12:14:30	88.701
07/22/02	12:15:30	88.302
07/22/02	12:16:30	91.146
07/22/02	12:17:30	87.421
07/22/02	12:18:30	85.544
07/22/02	12:19:30	86.340
07/22/02	12:20:30	87.904
07/22/02	12:21:30	86.966
07/22/02	12:22:30	88.445
07/22/02	12:23:30	88.445
07/22/02	12:24:30	86.795
07/22/02	12:25:30	88.217
07/22/02	12:26:30	89.326
07/22/02	12:27:30	88.615
07/22/02	12:28:30	88.530
07/22/02	12:29:30	89.326
07/22/02	12:30:30	87.904
07/22/02	12:31:30	87.506
07/22/02	12:32:30	89.241
07/22/02	12:33:30	90.350
07/22/02	12:34:30	85.458
07/22/02	12:35:30	87.990
07/22/02	12:36:30	87.193
07/22/02	12:37:30	87.677
07/22/02	12:38:30	88.132
07/22/02	12:39:30	86.255
07/22/02	12:40:30	86.653
07/22/02	12:41:30	86.966
07/22/02	12:42:30	89.156
07/22/02	12:43:30	89.411
07/22/02	12:44:30	89.639
07/22/02	12:45:30	89.952
07/22/02	12:46:30	91.146
07/22/02	12:47:30	90.122
07/22/02	12:48:30	89.639
07/22/02	12:49:30	90.435
07/22/02	12:50:30	91.459
07/22/02	12:51:30	90.577
07/22/02	12:52:30	93.109
07/22/02	12:53:30	93.109
07/22/02	12:54:30	90.577
07/22/02	12:55:30	91.772
07/22/02	12:56:30	89.468
07/22/02	12:57:30	91.914
07/22/02	12:58:30	93.962
07/22/02	12:59:30	92.170
07/22/02	13:00:30	91.459
07/22/02	13:01:30	91.288
07/22/02	13:02:30	91.914
07/22/02	13:03:30	92.085
07/22/02	13:04:30	91.772
07/22/02	13:05:30	93.336
07/22/02	13:06:30	92.540
07/22/02	13:07:30	92.540
07/22/02	13:08:30	91.516
07/22/02	13:09:30	92.227
07/22/02	13:10:30	93.109
07/22/02	13:11:30	93.336
07/22/02	13:12:30	91.857
07/22/02	13:13:30	92.170
07/22/02	13:14:30	92.710
07/22/02	13:15:30	91.374
07/22/02	13:16:30	92.796
07/22/02	13:17:30	94.445
07/22/02	13:18:30	90.976
07/22/02	13:19:30	92.625
07/22/02	13:20:30	92.796
07/22/02	13:21:30	90.492
07/22/02	13:22:30	91.374
07/22/02	13:23:30	93.649
07/22/02	13:24:30	91.203

SOUTHBOUND ACCESS ROAD OF IH35 - NO. 7492 cont.

Date	Time	Pres (PSI)	Date	Time	Pres (PSI)	Date	Time	Pres (PSI)	Date	Time	Pres (PSI)
07/22/02	13:25:30	94.047	07/22/02	14:31:30	91.914	07/22/02	15:37:30	91.288	07/22/02	16:43:30	89.810
07/22/02	13:26:30	91.857	07/22/02	14:32:30	90.577	07/22/02	15:38:30	89.411	07/22/02	16:44:30	89.810
07/22/02	13:27:30	91.601	07/22/02	14:33:30	90.748	07/22/02	15:39:30	89.810	07/22/02	16:45:30	91.601
07/22/02	13:28:30	92.710	07/22/02	14:34:30	88.928	07/22/02	15:40:30	90.833	07/22/02	16:46:30	89.326
07/22/02	13:29:30	93.649	07/22/02	14:35:30	90.577	07/22/02	15:41:30	91.061	07/22/02	16:47:30	90.265
07/22/02	13:30:30	93.251	07/22/02	14:36:30	89.639	07/22/02	15:42:30	90.265	07/22/02	16:48:30	90.435
07/22/02	13:31:30	93.023	07/22/02	14:37:30	91.857	07/22/02	15:43:30	87.591	07/22/02	16:49:30	90.976
07/22/02	13:32:30	92.625	07/22/02	14:38:30	89.241	07/22/02	15:44:30	88.445	07/22/02	16:50:30	90.976
07/22/02	13:33:30	92.938	07/22/02	14:39:30	90.976	07/22/02	15:45:30	90.976	07/22/02	16:51:30	90.890
07/22/02	13:34:30	93.251	07/22/02	14:40:30	92.227	07/22/02	15:46:30	89.866	07/22/02	16:52:30	92.227
07/22/02	13:35:30	93.734	07/22/02	14:41:30	91.203	07/22/02	15:47:30	89.099	07/22/02	16:53:30	90.976
07/22/02	13:36:30	91.459	07/22/02	14:42:30	91.687	07/22/02	15:48:30	90.890	07/22/02	16:54:30	90.663
07/22/02	13:37:30	92.227	07/22/02	14:43:30	91.516	07/22/02	15:49:30	90.833	07/22/02	16:55:30	90.890
07/22/02	13:38:30	93.194	07/22/02	14:44:30	92.227	07/22/02	15:50:30	88.217	07/22/02	16:56:30	91.203
07/22/02	13:39:30	92.938	07/22/02	14:45:30	91.146	07/22/02	15:51:30	88.388	07/22/02	16:57:30	92.398
07/22/02	13:40:30	90.179	07/22/02	14:46:30	90.122	07/22/02	15:52:30	89.326	07/22/02	16:58:30	92.483
07/22/02	13:41:30	91.772	07/22/02	14:47:30	89.724	07/22/02	15:53:30	89.724	07/22/02	16:59:30	91.914
07/22/02	13:42:30	91.857	07/22/02	14:48:30	90.976	07/22/02	15:54:30	89.468	07/22/02	17:00:30	92.170
07/22/02	13:43:30	91.061	07/22/02	14:49:30	90.037	07/22/02	15:55:30	89.099	07/22/02	17:01:30	91.516
07/22/02	13:44:30	91.374	07/22/02	14:50:30	88.843	07/22/02	15:56:30	89.156	07/22/02	17:02:30	91.999
07/22/02	13:45:30	92.483	07/22/02	14:51:30	91.687	07/22/02	15:57:30	89.156	07/22/02	17:03:30	92.227
07/22/02	13:46:30	92.398	07/22/02	14:52:30	91.772	07/22/02	15:58:30	89.952	07/22/02	17:04:30	91.687
07/22/02	13:47:30	92.796	07/22/02	14:53:30	91.146	07/22/02	15:59:30	88.786	07/22/02	17:05:30	92.398
07/22/02	13:48:30	93.023	07/22/02	14:54:30	89.952	07/22/02	16:00:30	89.810	07/22/02	17:06:30	90.577
07/22/02	13:49:30	89.952	07/22/02	14:55:30	88.530	07/22/02	16:01:30	90.492	07/22/02	17:07:30	90.265
07/22/02	13:50:30	91.146	07/22/02	14:56:30	90.179	07/22/02	16:02:30	88.786	07/22/02	17:08:30	92.938
07/22/02	13:51:30	93.421	07/22/02	14:57:30	91.772	07/22/02	16:03:30	89.866	07/22/02	17:09:30	93.421
07/22/02	13:52:30	94.843	07/22/02	14:58:30	90.890	07/22/02	16:04:30	89.468	07/22/02	17:10:30	93.109
07/22/02	13:53:30	93.194	07/22/02	14:59:30	89.810	07/22/02	16:05:30	90.265	07/22/02	17:11:30	92.085
07/22/02	13:54:30	92.170	07/22/02	15:00:30	90.265	07/22/02	16:06:30	90.179	07/22/02	17:12:30	93.023
07/22/02	13:55:30	91.516	07/22/02	15:01:30	91.203	07/22/02	16:07:30	89.554	07/22/02	17:13:30	93.819
07/22/02	13:56:30	89.241	07/22/02	15:02:30	88.843	07/22/02	16:08:30	90.833	07/22/02	17:14:30	93.251
07/22/02	13:57:30	91.288	07/22/02	15:03:30	90.890	07/22/02	16:09:30	89.156	07/22/02	17:15:30	94.047
07/22/02	13:58:30	91.687	07/22/02	15:04:30	91.061	07/22/02	16:10:30	89.724	07/22/02	17:16:30	93.592
07/22/02	13:59:30	92.227	07/22/02	15:05:30	89.156	07/22/02	16:11:30	89.639	07/22/02	17:17:30	92.483
07/22/02	14:00:30	90.350	07/22/02	15:06:30	91.288	07/22/02	16:12:30	90.748	07/22/02	17:18:30	92.710
07/22/02	14:01:30	90.577	07/22/02	15:07:30	89.952	07/22/02	16:13:30	89.866	07/22/02	17:19:30	94.218
07/22/02	14:02:30	89.411	07/22/02	15:08:30	90.748	07/22/02	16:14:30	88.701	07/22/02	17:20:30	94.673
07/22/02	14:03:30	92.170	07/22/02	15:09:30	90.435	07/22/02	16:15:30	89.554	07/22/02	17:21:30	94.360
07/22/02	14:04:30	93.023	07/22/02	15:10:30	91.288	07/22/02	16:16:30	89.326	07/22/02	17:22:30	95.071
07/22/02	14:05:30	92.398	07/22/02	15:11:30	89.639	07/22/02	16:17:30	89.724	07/22/02	17:23:30	94.360
07/22/02	14:06:30	91.061	07/22/02	15:12:30	90.265	07/22/02	16:18:30	90.492	07/22/02	17:24:30	91.288
07/22/02	14:07:30	92.170	07/22/02	15:13:30	89.241	07/22/02	16:19:30	89.241	07/22/02	17:25:30	92.881
07/22/02	14:08:30	90.435	07/22/02	15:14:30	89.724	07/22/02	16:20:30	90.492	07/22/02	17:26:30	93.592
07/22/02	14:09:30	91.601	07/22/02	15:15:30	90.976	07/22/02	16:21:30	88.132	07/22/02	17:27:30	92.085
07/22/02	14:10:30	92.796	07/22/02	15:16:30	88.843	07/22/02	16:22:30	90.122	07/22/02	17:28:30	93.962
07/22/02	14:11:30	89.156	07/22/02	15:17:30	89.952	07/22/02	16:23:30	89.866	07/22/02	17:29:30	94.530
07/22/02	14:12:30	91.687	07/22/02	15:18:30	88.388	07/22/02	16:24:30	89.866	07/22/02	17:30:30	93.962
07/22/02	14:13:30	92.398	07/22/02	15:19:30	89.952	07/22/02	16:25:30	88.445	07/22/02	17:31:30	93.734
07/22/02	14:14:30	89.810	07/22/02	15:20:30	88.445	07/22/02	16:26:30	88.843	07/22/02	17:32:30	92.170
07/22/02	14:15:30	92.625	07/22/02	15:21:30	89.156	07/22/02	16:27:30	88.530	07/22/02	17:33:30	93.962
07/22/02	14:16:30	91.516	07/22/02	15:22:30	88.928	07/22/02	16:28:30	89.468	07/22/02	17:34:30	93.649
07/22/02	14:17:30	93.194	07/22/02	15:23:30	91.288	07/22/02	16:29:30	89.554	07/22/02	17:35:30	93.905
07/22/02	14:18:30	93.592	07/22/02	15:24:30	90.663	07/22/02	16:30:30	90.663	07/22/02	17:36:30	94.274
07/22/02	14:19:30	91.772	07/22/02	15:25:30	89.866	07/22/02	16:31:30	90.265	07/22/02	17:37:30	92.312
07/22/02	14:20:30	90.890	07/22/02	15:26:30	88.302	07/22/02	16:32:30	88.786	07/22/02	17:38:30	93.734
07/22/02	14:21:30	91.516	07/22/02	15:27:30	89.013	07/22/02	16:33:30	88.843	07/22/02	17:39:30	94.047
07/22/02	14:22:30	90.663	07/22/02	15:28:30	90.663	07/22/02	16:34:30	89.810	07/22/02	17:40:30	94.218
07/22/02	14:23:30	87.904	07/22/02	15:29:30	90.577	07/22/02	16:35:30	89.724	07/22/02	17:41:30	93.962
07/22/02	14:24:30	89.866	07/22/02	15:30:30	90.435	07/22/02	16:36:30	88.445	07/22/02	17:42:30	91.772
07/22/02	14:25:30	90.748	07/22/02	15:31:30	89.099	07/22/02	16:37:30	90.350	07/22/02	17:43:30	94.132
07/22/02	14:26:30	88.302	07/22/02	15:32:30	89.554	07/22/02	16:38:30	90.976	07/22/02	17:44:30	94.047
07/22/02	14:27:30	90.890	07/22/02	15:33:30	88.786	07/22/02	16:39:30	89.099	07/22/02	17:45:30	93.734
07/22/02	14:28:30	92.170	07/22/02	15:34:30	89.724	07/22/02	16:40:30	90.663	07/22/02	17:46:30	93.109
07/22/02	14:29:30	92.170	07/22/02	15:35:30	88.701	07/22/02	16:41:30	90.890	07/22/02	17:47:30	92.170
07/22/02	14:30:30	91.857	07/22/02	15:36:30	90.037	07/22/02	16:42:30	90.435	07/22/02	17:48:30	92.483

SOUTHBOUND ACCESS ROAD OF IH35 - NO. 7492 cont.

Date	Time	Pres (PSI)
07/22/02	17:49:30	94.843
07/22/02	17:50:30	92.625
07/22/02	17:51:30	94.274
07/22/02	17:52:30	93.962
07/22/02	17:53:30	93.421
07/22/02	17:54:30	93.109
07/22/02	17:55:30	93.109
07/22/02	17:56:30	93.109
07/22/02	17:57:30	94.616
07/22/02	17:58:30	94.218
07/22/02	17:59:30	94.274
07/22/02	18:00:30	92.398
07/22/02	18:01:30	90.976
07/22/02	18:02:30	90.179
07/22/02	18:03:30	90.748
07/22/02	18:04:30	93.023
07/22/02	18:05:30	92.483
07/22/02	18:06:30	93.109
07/22/02	18:07:30	93.819
07/22/02	18:08:30	93.734
07/22/02	18:09:30	94.616
07/22/02	18:10:30	94.047
07/22/02	18:11:30	93.023
07/22/02	18:12:30	91.772
07/22/02	18:13:30	93.734
07/22/02	18:14:30	93.649
07/22/02	18:15:30	92.170
07/22/02	18:16:30	92.881
07/22/02	18:17:30	93.962
07/22/02	18:18:30	92.881
07/22/02	18:19:30	94.047
07/22/02	18:20:30	92.881
07/22/02	18:21:30	93.023
07/22/02	18:22:30	93.421
07/22/02	18:23:30	92.881
07/22/02	18:24:30	92.625
07/22/02	18:25:30	92.483
07/22/02	18:26:30	92.540
07/22/02	18:27:30	92.938
07/22/02	18:28:30	92.540
07/22/02	18:29:30	92.170
07/22/02	18:30:30	91.857
07/22/02	18:31:30	92.796
07/22/02	18:32:30	93.421
07/22/02	18:33:30	92.170
07/22/02	18:34:30	91.772
07/22/02	18:35:30	92.483
07/22/02	18:36:30	91.687
07/22/02	18:37:30	92.398
07/22/02	18:38:30	93.194
07/22/02	18:39:30	93.023
07/22/02	18:40:30	93.592
07/22/02	18:41:30	92.398
07/22/02	18:42:30	93.507
07/22/02	18:43:30	93.194
07/22/02	18:44:30	93.109
07/22/02	18:45:30	92.625
07/22/02	18:46:30	93.592
07/22/02	18:47:30	93.819
07/22/02	18:48:30	92.710
07/22/02	18:49:30	92.170
07/22/02	18:50:30	92.540
07/22/02	18:51:30	93.194
07/22/02	18:52:30	93.251
07/22/02	18:53:30	92.540
07/22/02	18:54:30	91.374
07/22/02	18:55:30	92.625
07/22/02	18:56:30	91.687
07/22/02	18:57:30	92.540
07/22/02	18:58:30	92.540
07/22/02	18:59:30	92.625
07/22/02	19:00:30	91.516
07/22/02	19:01:30	91.601
07/22/02	19:02:30	92.938
07/22/02	19:03:30	92.796
07/22/02	19:04:30	92.398
07/22/02	19:05:30	92.796
07/22/02	19:06:30	91.914
07/22/02	19:07:30	92.398
07/22/02	19:08:30	92.227
07/22/02	19:09:30	92.312
07/22/02	19:10:30	92.938
07/22/02	19:11:30	92.796
07/22/02	19:12:30	93.734
07/22/02	19:13:30	93.421
07/22/02	19:14:30	93.336
07/22/02	19:15:30	92.398
07/22/02	19:16:30	92.227
07/22/02	19:17:30	91.999
07/22/02	19:18:30	91.914
07/22/02	19:19:30	92.227
07/22/02	19:20:30	92.170
07/22/02	19:21:30	91.772
07/22/02	19:22:30	93.251
07/22/02	19:23:30	93.109
07/22/02	19:24:30	92.796
07/22/02	19:25:30	92.796
07/22/02	19:26:30	91.146
07/22/02	19:27:30	92.710
07/22/02	19:28:30	92.085
07/22/02	19:29:30	92.710
07/22/02	19:30:30	92.085
07/22/02	19:31:30	92.796
07/22/02	19:32:30	92.625
07/22/02	19:33:30	91.516
07/22/02	19:34:30	91.203
07/22/02	19:35:30	92.312
07/22/02	19:36:30	91.772
07/22/02	19:37:30	91.374
07/22/02	19:38:30	91.772
07/22/02	19:39:30	91.288
07/22/02	19:40:30	92.227
07/22/02	19:41:30	92.796
07/22/02	19:42:30	92.483
07/22/02	19:43:30	91.516
07/22/02	19:44:30	93.421
07/22/02	19:45:30	92.796
07/22/02	19:46:30	91.601
07/22/02	19:47:30	90.748
07/22/02	19:48:30	91.288
07/22/02	19:49:30	92.170
07/22/02	19:50:30	91.914
07/22/02	19:51:30	91.772
07/22/02	19:52:30	92.170
07/22/02	19:53:30	91.203
07/22/02	19:54:30	92.398
07/22/02	19:55:30	92.085
07/22/02	19:56:30	92.170
07/22/02	19:57:30	91.687
07/22/02	19:58:30	92.170
07/22/02	19:59:30	91.146
07/22/02	20:00:30	90.833
07/22/02	20:01:30	91.914
07/22/02	20:02:30	91.914
07/22/02	20:03:30	92.881
07/22/02	20:04:30	92.881
07/22/02	20:05:30	91.999
07/22/02	20:06:30	92.085
07/22/02	20:07:30	91.999
07/22/02	20:08:30	92.227
07/22/02	20:09:30	91.772
07/22/02	20:10:30	91.857
07/22/02	20:11:30	91.999
07/22/02	20:12:30	92.483
07/22/02	20:13:30	91.772
07/22/02	20:14:30	92.085
07/22/02	20:15:30	92.227
07/22/02	20:16:30	93.336
07/22/02	20:17:30	92.398
07/22/02	20:18:30	92.312
07/22/02	20:19:30	92.312
07/22/02	20:20:30	91.061
07/22/02	20:21:30	90.350
07/22/02	20:22:30	91.857
07/22/02	20:23:30	89.468
07/22/02	20:24:30	91.288
07/22/02	20:25:30	91.857
07/22/02	20:26:30	91.203
07/22/02	20:27:30	91.146
07/22/02	20:28:30	91.687
07/22/02	20:29:30	90.122
07/22/02	20:30:30	90.435
07/22/02	20:31:30	90.663
07/22/02	20:32:30	91.772
07/22/02	20:33:30	92.398
07/22/02	20:34:30	91.516
07/22/02	20:35:30	91.914
07/22/02	20:36:30	91.374
07/22/02	20:37:30	91.288
07/22/02	20:38:30	91.857
07/22/02	20:39:30	91.914
07/22/02	20:40:30	92.227
07/22/02	20:41:30	91.374
07/22/02	20:42:30	92.227
07/22/02	20:43:30	92.170
07/22/02	20:44:30	92.227
07/22/02	20:45:30	91.914
07/22/02	20:46:30	90.748
07/22/02	20:47:30	91.459
07/22/02	20:48:30	90.265
07/22/02	20:49:30	91.914
07/22/02	20:50:30	92.312
07/22/02	20:51:30	91.687
07/22/02	20:52:30	91.288
07/22/02	20:53:30	91.687
07/22/02	20:54:30	90.492
07/22/02	20:55:30	89.156
07/22/02	20:56:30	90.492
07/22/02	20:57:30	90.663
07/22/02	20:58:30	91.601
07/22/02	20:59:30	91.914
07/22/02	21:00:30	89.156
07/22/02	21:01:30	89.468
07/22/02	21:02:30	90.265
07/22/02	21:03:30	89.952
07/22/02	21:04:30	90.350
07/22/02	21:05:30	89.810
07/22/02	21:06:30	90.037
07/22/02	21:07:30	90.435
07/22/02	21:08:30	90.492
07/22/02	21:09:30	90.037
07/22/02	21:10:30	90.492
07/22/02	21:11:30	91.374
07/22/02	21:12:30	91.061
07/22/02	21:13:30	90.890
07/22/02	21:14:30	90.748
07/22/02	21:15:30	90.265
07/22/02	21:16:30	91.601
07/22/02	21:17:30	91.516
07/22/02	21:18:30	92.170
07/22/02	21:19:30	91.459
07/22/02	21:20:30	91.288
07/22/02	21:21:30	91.601
07/22/02	21:22:30	91.601
07/22/02	21:23:30	91.459
07/22/02	21:24:30	91.914
07/22/02	21:25:30	92.398
07/22/02	21:26:30	91.999
07/22/02	21:27:30	92.483
07/22/02	21:28:30	92.312
07/22/02	21:29:30	91.914
07/22/02	21:30:30	93.251
07/22/02	21:31:30	93.251
07/22/02	21:32:30	93.592
07/22/02	21:33:30	93.507
07/22/02	21:34:30	94.047
07/22/02	21:35:30	94.047
07/22/02	21:36:30	93.109
07/22/02	21:37:30	93.819
07/22/02	21:38:30	94.360
07/22/02	21:39:30	94.218
07/22/02	21:40:30	95.782
07/22/02	21:41:30	94.673
07/22/02	21:42:30	94.843
07/22/02	21:43:30	95.298
07/22/02	21:44:30	94.218
07/22/02	21:45:30	94.985
07/22/02	21:46:30	94.843
07/22/02	21:47:30	95.384
07/22/02	21:48:30	95.071
07/22/02	21:49:30	95.696
07/22/02	21:50:30	94.445
07/22/02	21:51:30	95.241
07/22/02	21:52:30	94.843
07/22/02	21:53:30	94.616
07/22/02	21:54:30	95.384
07/22/02	21:55:30	94.758
07/22/02	21:56:30	94.530
07/22/02	21:57:30	94.132
07/22/02	21:58:30	92.796
07/22/02	21:59:30	93.336
07/22/02	22:00:30	88.530
07/22/02	22:01:30	87.193
07/22/02	22:02:30	86.710
07/22/02	22:03:30	87.108
07/22/02	22:04:30	87.279
07/22/02	22:05:30	87.193
07/22/02	22:06:30	87.108
07/22/02	22:07:30	87.051
07/22/02	22:08:30	87.051
07/22/02	22:09:30	87.108
07/22/02	22:10:30	87.051
07/22/02	22:11:30	86.710
07/22/02	22:12:30	86.710

SOUTHBOUND ACCESS ROAD OF IH35 - NO. 7492 cont.

Date	Time	Pres (PSI)	Date	Time	Pres (PSI)	Date	Time	Pres (PSI)	Date	Time	Pres (PSI)
07/22/02	22:13:30	86.482	07/22/02	23:19:30	90.890	07/23/02	00:25:30	87.904	07/23/02	01:31:30	93.336
07/22/02	22:14:30	85.857	07/22/02	23:20:30	90.748	07/23/02	00:26:30	88.302	07/23/02	01:32:30	93.251
07/22/02	22:15:30	86.340	07/22/02	23:21:30	90.890	07/23/02	00:27:30	88.302	07/23/02	01:33:30	93.507
07/22/02	22:16:30	86.710	07/22/02	23:22:30	90.492	07/23/02	00:28:30	88.132	07/23/02	01:34:30	93.734
07/22/02	22:17:30	86.169	07/22/02	23:23:30	90.492	07/23/02	00:29:30	87.904	07/23/02	01:35:30	93.421
07/22/02	22:18:30	86.255	07/22/02	23:24:30	89.952	07/23/02	00:30:30	88.388	07/23/02	01:36:30	93.194
07/22/02	22:19:30	85.231	07/22/02	23:25:30	90.663	07/23/02	00:31:30	88.530	07/23/02	01:37:30	93.336
07/22/02	22:20:30	85.686	07/22/02	23:26:30	91.288	07/23/02	00:32:30	88.445	07/23/02	01:38:30	93.649
07/22/02	22:21:30	90.890	07/22/02	23:27:30	90.976	07/23/02	00:33:30	89.241	07/23/02	01:39:30	93.023
07/22/02	22:22:30	91.374	07/22/02	23:28:30	91.146	07/23/02	00:34:30	89.724	07/23/02	01:40:30	93.251
07/22/02	22:23:30	93.421	07/22/02	23:29:30	91.288	07/23/02	00:35:30	89.411	07/23/02	01:41:30	93.649
07/22/02	22:24:30	91.772	07/22/02	23:30:30	90.577	07/23/02	00:36:30	89.326	07/23/02	01:42:30	93.649
07/22/02	22:25:30	91.999	07/22/02	23:31:30	91.061	07/23/02	00:37:30	89.724	07/23/02	01:43:30	93.649
07/22/02	22:26:30	91.516	07/22/02	23:32:30	91.146	07/23/02	00:38:30	89.639	07/23/02	01:44:30	93.421
07/22/02	22:27:30	91.687	07/22/02	23:33:30	91.061	07/23/02	00:39:30	89.468	07/23/02	01:45:30	93.336
07/22/02	22:28:30	92.227	07/22/02	23:34:30	91.459	07/23/02	00:40:30	89.866	07/23/02	01:46:30	93.336
07/22/02	22:29:30	91.687	07/22/02	23:35:30	89.241	07/23/02	00:41:30	90.833	07/23/02	01:47:30	92.312
07/22/02	22:30:30	91.914	07/22/02	23:36:30	90.748	07/23/02	00:42:30	90.833	07/23/02	01:48:30	92.625
07/22/02	22:31:30	91.772	07/22/02	23:37:30	90.492	07/23/02	00:43:30	91.061	07/23/02	01:49:30	92.483
07/22/02	22:32:30	90.890	07/22/02	23:38:30	90.350	07/23/02	00:44:30	91.061	07/23/02	01:50:30	92.710
07/22/02	22:33:30	91.601	07/22/02	23:39:30	90.748	07/23/02	00:45:30	91.288	07/23/02	01:51:30	92.312
07/22/02	22:34:30	91.374	07/22/02	23:40:30	90.577	07/23/02	00:46:30	91.061	07/23/02	01:52:30	92.483
07/22/02	22:35:30	88.530	07/22/02	23:41:30	89.724	07/23/02	00:47:30	90.748	07/23/02	01:53:30	92.483
07/22/02	22:36:30	91.061	07/22/02	23:42:30	89.866	07/23/02	00:48:30	91.146	07/23/02	01:54:30	92.540
07/22/02	22:37:30	91.203	07/22/02	23:43:30	90.122	07/23/02	00:49:30	91.203	07/23/02	01:55:30	90.833
07/22/02	22:38:30	91.146	07/22/02	23:44:30	89.952	07/23/02	00:50:30	91.288	07/23/02	01:56:30	91.601
07/22/02	22:39:30	90.663	07/22/02	23:45:30	90.122	07/23/02	00:51:30	91.288	07/23/02	01:57:30	92.085
07/22/02	22:40:30	89.866	07/22/02	23:46:30	89.411	07/23/02	00:52:30	91.516	07/23/02	01:58:30	92.398
07/22/02	22:41:30	91.061	07/22/02	23:47:30	89.554	07/23/02	00:53:30	91.857	07/23/02	01:59:30	92.625
07/22/02	22:42:30	90.492	07/22/02	23:48:30	89.468	07/23/02	00:54:30	91.459	07/23/02	02:00:30	92.227
07/22/02	22:43:30	90.577	07/22/02	23:49:30	89.241	07/23/02	00:55:30	93.023	07/23/02	02:01:30	92.227
07/22/02	22:44:30	89.952	07/22/02	23:50:30	89.810	07/23/02	00:56:30	93.336	07/23/02	02:02:30	92.227
07/22/02	22:45:30	90.122	07/22/02	23:51:30	89.326	07/23/02	00:57:30	94.218	07/23/02	02:03:30	92.170
07/22/02	22:46:30	91.516	07/22/02	23:52:30	89.156	07/23/02	00:58:30	94.360	07/23/02	02:04:30	92.227
07/22/02	22:47:30	90.748	07/22/02	23:53:30	89.468	07/23/02	00:59:30	94.274	07/23/02	02:05:30	92.085
07/22/02	22:48:30	90.492	07/22/02	23:54:30	89.639	07/23/02	01:00:30	94.274	07/23/02	02:06:30	92.227
07/22/02	22:49:30	91.061	07/22/02	23:55:30	88.445	07/23/02	01:01:30	93.023	07/23/02	02:07:30	92.170
07/22/02	22:50:30	91.288	07/22/02	23:56:30	89.326	07/23/02	01:02:30	92.312	07/23/02	02:08:30	92.170
07/22/02	22:51:30	91.203	07/22/02	23:57:30	89.156	07/23/02	01:03:30	92.796	07/23/02	02:09:30	92.170
07/22/02	22:52:30	91.146	07/22/02	23:58:30	89.468	07/23/02	01:04:30	93.023	07/23/02	02:10:30	92.085
07/22/02	22:53:30	90.748	07/22/02	23:59:30	90.037	07/23/02	01:05:30	93.421	07/23/02	02:11:30	93.251
07/22/02	22:54:30	90.663	07/23/02	00:00:30	89.468	07/23/02	01:06:30	93.109	07/23/02	02:12:30	92.398
07/22/02	22:55:30	88.928	07/23/02	00:01:30	88.445	07/23/02	01:07:30	93.336	07/23/02	02:13:30	92.540
07/22/02	22:56:30	91.374	07/23/02	00:02:30	88.217	07/23/02	01:08:30	92.881	07/23/02	02:14:30	91.914
07/22/02	22:57:30	90.976	07/23/02	00:03:30	89.013	07/23/02	01:09:30	93.109	07/23/02	02:15:30	92.227
07/22/02	22:58:30	91.374	07/23/02	00:04:30	88.928	07/23/02	01:10:30	92.483	07/23/02	02:16:30	92.625
07/22/02	22:59:30	90.663	07/23/02	00:05:30	89.013	07/23/02	01:11:30	92.881	07/23/02	02:17:30	92.796
07/22/02	23:00:30	90.976	07/23/02	00:06:30	89.099	07/23/02	01:12:30	92.881	07/23/02	02:18:30	92.796
07/22/02	23:01:30	90.748	07/23/02	00:07:30	89.326	07/23/02	01:13:30	92.796	07/23/02	02:19:30	93.109
07/22/02	23:02:30	89.013	07/23/02	00:08:30	88.701	07/23/02	01:14:30	92.710	07/23/02	02:20:30	93.109
07/22/02	23:03:30	90.122	07/23/02	00:09:30	89.156	07/23/02	01:15:30	91.516	07/23/02	02:21:30	92.710
07/22/02	23:04:30	90.122	07/23/02	00:10:30	89.639	07/23/02	01:16:30	92.398	07/23/02	02:22:30	92.540
07/22/02	23:05:30	90.577	07/23/02	00:11:30	89.554	07/23/02	01:17:30	92.796	07/23/02	02:23:30	92.483
07/22/02	23:06:30	90.492	07/23/02	00:12:30	89.810	07/23/02	01:18:30	92.881	07/23/02	02:24:30	92.483
07/22/02	23:07:30	90.435	07/23/02	00:13:30	89.639	07/23/02	01:19:30	93.194	07/23/02	02:25:30	92.398
07/22/02	23:08:30	90.663	07/23/02	00:14:30	89.468	07/23/02	01:20:30	93.194	07/23/02	02:26:30	91.687
07/22/02	23:09:30	89.952	07/23/02	00:15:30	85.629	07/23/02	01:21:30	93.819	07/23/02	02:27:30	92.085
07/22/02	23:10:30	89.866	07/23/02	00:16:30	87.364	07/23/02	01:22:30	93.962	07/23/02	02:28:30	91.999
07/22/02	23:11:30	90.179	07/23/02	00:17:30	86.795	07/23/02	01:23:30	93.649	07/23/02	02:29:30	91.914
07/22/02	23:12:30	90.179	07/23/02	00:18:30	86.880	07/23/02	01:24:30	93.962	07/23/02	02:30:30	91.999
07/22/02	23:13:30	89.866	07/23/02	00:19:30	86.397	07/23/02	01:25:30	93.507	07/23/02	02:31:30	91.857
07/22/02	23:14:30	89.866	07/23/02	00:20:30	86.340	07/23/02	01:26:30	93.649	07/23/02	02:32:30	92.085
07/22/02	23:15:30	88.445	07/23/02	00:21:30	88.075	07/23/02	01:27:30	93.251	07/23/02	02:33:30	91.999
07/22/02	23:16:30	89.724	07/23/02	00:22:30	87.904	07/23/02	01:28:30	93.649	07/23/02	02:34:30	91.914
07/22/02	23:17:30	89.639	07/23/02	00:23:30	87.819	07/23/02	01:29:30	93.734	07/23/02	02:35:30	91.203
07/22/02	23:18:30	90.833	07/23/02	00:24:30	87.904	07/23/02	01:30:30	93.023	07/23/02	02:36:30	91.914

SOUTHBOUND ACCESS ROAD OF IH35 - NO. 7492 cont.

Date	Time	Pres (PSI)
07/23/02	02:37:30	92.227
07/23/02	02:38:30	92.398
07/23/02	02:39:30	92.085
07/23/02	02:40:30	92.170
07/23/02	02:41:30	93.251
07/23/02	02:42:30	93.421
07/23/02	02:43:30	93.251
07/23/02	02:44:30	93.251
07/23/02	02:45:30	93.649
07/23/02	02:46:30	93.023
07/23/02	02:47:30	92.085
07/23/02	02:48:30	92.398
07/23/02	02:49:30	92.312
07/23/02	02:50:30	92.170
07/23/02	02:51:30	92.170
07/23/02	02:52:30	92.085
07/23/02	02:53:30	92.398
07/23/02	02:54:30	92.227
07/23/02	02:55:30	92.085
07/23/02	02:56:30	93.251
07/23/02	02:57:30	92.881
07/23/02	02:58:30	92.625
07/23/02	02:59:30	92.710
07/23/02	03:00:30	92.540
07/23/02	03:01:30	91.061
07/23/02	03:02:30	90.890
07/23/02	03:03:30	91.061
07/23/02	03:04:30	91.288
07/23/02	03:05:30	91.516
07/23/02	03:06:30	91.459
07/23/02	03:07:30	91.203
07/23/02	03:08:30	91.374
07/23/02	03:09:30	91.374
07/23/02	03:10:30	91.288
07/23/02	03:11:30	91.288
07/23/02	03:12:30	91.146
07/23/02	03:13:30	91.288
07/23/02	03:14:30	91.146
07/23/02	03:15:30	90.577
07/23/02	03:16:30	91.146
07/23/02	03:17:30	89.156
07/23/02	03:18:30	90.037
07/23/02	03:19:30	89.724
07/23/02	03:20:30	89.810
07/23/02	03:21:30	89.468
07/23/02	03:22:30	89.013
07/23/02	03:23:30	89.156
07/23/02	03:24:30	89.156
07/23/02	03:25:30	89.241
07/23/02	03:26:30	89.013
07/23/02	03:27:30	89.156
07/23/02	03:28:30	89.099
07/23/02	03:29:30	88.786
07/23/02	03:30:30	89.099
07/23/02	03:31:30	89.156
07/23/02	03:32:30	89.156
07/23/02	03:33:30	89.156
07/23/02	03:34:30	89.156
07/23/02	03:35:30	88.928
07/23/02	03:36:30	89.099
07/23/02	03:37:30	89.099
07/23/02	03:38:30	88.928
07/23/02	03:39:30	89.156
07/23/02	03:40:30	89.326
07/23/02	03:41:30	89.724
07/23/02	03:42:30	90.037
07/23/02	03:43:30	89.952
07/23/02	03:44:30	90.122
07/23/02	03:45:30	89.952
07/23/02	03:46:30	90.179
07/23/02	03:47:30	90.179
07/23/02	03:48:30	90.492
07/23/02	03:49:30	90.435
07/23/02	03:50:30	90.435
07/23/02	03:51:30	90.577
07/23/02	03:52:30	90.435
07/23/02	03:53:30	90.748
07/23/02	03:54:30	90.976
07/23/02	03:55:30	88.786
07/23/02	03:56:30	90.037
07/23/02	03:57:30	89.952
07/23/02	03:58:30	90.179
07/23/02	03:59:30	90.265
07/23/02	04:00:30	90.435
07/23/02	04:01:30	90.663
07/23/02	04:02:30	90.122
07/23/02	04:03:30	90.663
07/23/02	04:04:30	90.890
07/23/02	04:05:30	90.976
07/23/02	04:06:30	91.146
07/23/02	04:07:30	91.288
07/23/02	04:08:30	91.203
07/23/02	04:09:30	91.288
07/23/02	04:10:30	91.374
07/23/02	04:11:30	91.459
07/23/02	04:12:30	91.516
07/23/02	04:13:30	91.857
07/23/02	04:14:30	91.857
07/23/02	04:15:30	92.085
07/23/02	04:16:30	91.288
07/23/02	04:17:30	91.374
07/23/02	04:18:30	91.687
07/23/02	04:19:30	92.085
07/23/02	04:20:30	92.312
07/23/02	04:21:30	92.398
07/23/02	04:22:30	92.710
07/23/02	04:23:30	92.625
07/23/02	04:24:30	92.710
07/23/02	04:25:30	92.710
07/23/02	04:26:30	92.312
07/23/02	04:27:30	92.398
07/23/02	04:28:30	92.398
07/23/02	04:29:30	92.170
07/23/02	04:30:30	91.601
07/23/02	04:31:30	91.772
07/23/02	04:32:30	91.914
07/23/02	04:33:30	92.881
07/23/02	04:34:30	93.336
07/23/02	04:35:30	94.985
07/23/02	04:36:30	94.218
07/23/02	04:37:30	94.673
07/23/02	04:38:30	94.758
07/23/02	04:39:30	94.985
07/23/02	04:40:30	94.616
07/23/02	04:41:30	94.843
07/23/02	04:42:30	93.962
07/23/02	04:43:30	94.360
07/23/02	04:44:30	94.530
07/23/02	04:45:30	94.445
07/23/02	04:46:30	94.132
07/23/02	04:47:30	94.360
07/23/02	04:48:30	94.218
07/23/02	04:49:30	94.274
07/23/02	04:50:30	94.985
07/23/02	04:51:30	94.929
07/23/02	04:52:30	94.616
07/23/02	04:53:30	94.530
07/23/02	04:54:30	94.274
07/23/02	04:55:30	94.673
07/23/02	04:56:30	94.673
07/23/02	04:57:30	94.530
07/23/02	04:58:30	94.616
07/23/02	04:59:30	94.360
07/23/02	05:00:30	94.218
07/23/02	05:01:30	94.758
07/23/02	05:02:30	95.298
07/23/02	05:03:30	95.241
07/23/02	05:04:30	95.156
07/23/02	05:05:30	95.241
07/23/02	05:06:30	94.929
07/23/02	05:07:30	95.156
07/23/02	05:08:30	95.241
07/23/02	05:09:30	95.156
07/23/02	05:10:30	95.071
07/23/02	05:11:30	94.758
07/23/02	05:12:30	92.483
07/23/02	05:13:30	94.218
07/23/02	05:14:30	93.592
07/23/02	05:15:30	93.507
07/23/02	05:16:30	92.881
07/23/02	05:17:30	91.999
07/23/02	05:18:30	92.881
07/23/02	05:19:30	92.938
07/23/02	05:20:30	93.023
07/23/02	05:21:30	92.540
07/23/02	05:22:30	91.601
07/23/02	05:23:30	92.398
07/23/02	05:24:30	92.938
07/23/02	05:25:30	93.023
07/23/02	05:26:30	93.109
07/23/02	05:27:30	91.374
07/23/02	05:28:30	92.312
07/23/02	05:29:30	92.312
07/23/02	05:30:30	91.914
07/23/02	05:31:30	91.772
07/23/02	05:32:30	92.483
07/23/02	05:33:30	93.336
07/23/02	05:34:30	94.530
07/23/02	05:35:30	93.962
07/23/02	05:36:30	93.905
07/23/02	05:37:30	94.047
07/23/02	05:38:30	93.905
07/23/02	05:39:30	94.218
07/23/02	05:40:30	94.047
07/23/02	05:41:30	94.616
07/23/02	05:42:30	94.445
07/23/02	05:43:30	94.445
07/23/02	05:44:30	94.360
07/23/02	05:45:30	94.616
07/23/02	05:46:30	94.218
07/23/02	05:47:30	93.962
07/23/02	05:48:30	94.132
07/23/02	05:49:30	93.734
07/23/02	05:50:30	93.819
07/23/02	05:51:30	93.962
07/23/02	05:52:30	93.905
07/23/02	05:53:30	94.218
07/23/02	05:54:30	94.132
07/23/02	05:55:30	93.819
07/23/02	05:56:30	94.047
07/23/02	05:57:30	91.999
07/23/02	05:58:30	92.938
07/23/02	05:59:30	92.625
07/23/02	06:00:30	93.194
07/23/02	06:01:30	92.085
07/23/02	06:02:30	90.663
07/23/02	06:03:30	91.687
07/23/02	06:04:30	91.687
07/23/02	06:05:30	91.999
07/23/02	06:06:30	91.772
07/23/02	06:07:30	90.663
07/23/02	06:08:30	91.857
07/23/02	06:09:30	92.227
07/23/02	06:10:30	92.227
07/23/02	06:11:30	92.312
07/23/02	06:12:30	90.435
07/23/02	06:13:30	90.890
07/23/02	06:14:30	91.146
07/23/02	06:15:30	91.061
07/23/02	06:16:30	90.833
07/23/02	06:17:30	90.890
07/23/02	06:18:30	92.312
07/23/02	06:19:30	92.938
07/23/02	06:20:30	92.938
07/23/02	06:21:30	93.421
07/23/02	06:22:30	93.649
07/23/02	06:23:30	93.905
07/23/02	06:24:30	93.336
07/23/02	06:25:30	93.109
07/23/02	06:26:30	93.592
07/23/02	06:27:30	93.592
07/23/02	06:28:30	93.251
07/23/02	06:29:30	93.251
07/23/02	06:30:30	93.421
07/23/02	06:31:30	93.251
07/23/02	06:32:30	93.507
07/23/02	06:33:30	93.421
07/23/02	06:34:30	93.109
07/23/02	06:35:30	93.507
07/23/02	06:36:30	93.194
07/23/02	06:37:30	93.251
07/23/02	06:38:30	93.194
07/23/02	06:39:30	93.421
07/23/02	06:40:30	93.421
07/23/02	06:41:30	93.194
07/23/02	06:42:30	93.336
07/23/02	06:43:30	92.881
07/23/02	06:44:30	93.109
07/23/02	06:45:30	93.109
07/23/02	06:46:30	93.109
07/23/02	06:47:30	92.881
07/23/02	06:48:30	93.023
07/23/02	06:49:30	93.109
07/23/02	06:50:30	92.938
07/23/02	06:51:30	93.194
07/23/02	06:52:30	93.109
07/23/02	06:53:30	92.938
07/23/02	06:54:30	93.251
07/23/02	06:55:30	92.938
07/23/02	06:56:30	93.194
07/23/02	06:57:30	92.312
07/23/02	06:58:30	92.796
07/23/02	06:59:30	92.881
07/23/02	07:00:30	92.398

SOUTHBOUND ACCESS ROAD OF IH35 - NO. 7492 cont.

Date	Time	Pres (PSI)
07/23/02	07:01:30	92.881
07/23/02	07:02:30	93.109
07/23/02	07:03:30	92.796
07/23/02	07:04:30	92.881
07/23/02	07:05:30	92.938
07/23/02	07:06:30	92.227
07/23/02	07:07:30	92.710
07/23/02	07:08:30	92.398
07/23/02	07:09:30	92.938
07/23/02	07:10:30	92.796
07/23/02	07:11:30	92.625
07/23/02	07:12:30	92.796
07/23/02	07:13:30	92.710
07/23/02	07:14:30	92.796
07/23/02	07:15:30	92.540
07/23/02	07:16:30	92.540
07/23/02	07:17:30	92.227
07/23/02	07:18:30	92.085
07/23/02	07:19:30	92.483
07/23/02	07:20:30	92.312
07/23/02	07:21:30	92.398
07/23/02	07:22:30	93.507
07/23/02	07:23:30	93.421
07/23/02	07:24:30	93.194
07/23/02	07:25:30	93.251
07/23/02	07:26:30	92.710
07/23/02	07:27:30	92.796
07/23/02	07:28:30	93.251
07/23/02	07:29:30	93.194
07/23/02	07:30:30	93.194
07/23/02	07:31:30	93.421
07/23/02	07:32:30	92.540
07/23/02	07:33:30	93.194
07/23/02	07:34:30	93.023
07/23/02	07:35:30	92.625
07/23/02	07:36:30	92.796
07/23/02	07:37:30	92.881
07/23/02	07:38:30	92.881
07/23/02	07:39:30	92.881
07/23/02	07:40:30	92.710
07/23/02	07:41:30	92.881
07/23/02	07:42:30	92.938
07/23/02	07:43:30	93.251
07/23/02	07:44:30	93.109
07/23/02	07:45:30	93.336
07/23/02	07:46:30	93.421
07/23/02	07:47:30	93.649
07/23/02	07:48:30	93.336
07/23/02	07:49:30	93.507
07/23/02	07:50:30	93.649
07/23/02	07:51:30	93.905
07/23/02	07:52:30	93.592
07/23/02	07:53:30	93.962
07/23/02	07:54:30	94.132
07/23/02	07:55:30	94.274
07/23/02	07:56:30	94.673
07/23/02	07:57:30	94.360
07/23/02	07:58:30	94.445
07/23/02	07:59:30	93.819
07/23/02	08:00:30	94.445
07/23/02	08:01:30	94.360
07/23/02	08:02:30	94.843
07/23/02	08:03:30	94.616
07/23/02	08:04:30	94.616
07/23/02	08:05:30	94.843
07/23/02	08:06:30	94.929
07/23/02	08:07:30	94.843
07/23/02	08:08:30	95.156
07/23/02	08:09:30	95.554
07/23/02	08:10:30	95.298
07/23/02	08:11:30	96.095
07/23/02	08:12:30	95.554
07/23/02	08:13:30	95.156
07/23/02	08:14:30	95.071
07/23/02	08:15:30	96.009
07/23/02	08:16:30	96.407
07/23/02	08:17:30	96.265
07/23/02	08:18:30	96.407
07/23/02	08:19:30	96.265
07/23/02	08:20:30	96.663
07/23/02	08:21:30	95.952
07/23/02	08:22:30	96.265
07/23/02	08:23:30	96.578
07/23/02	08:24:30	96.806
07/23/02	08:25:30	96.720
07/23/02	08:26:30	96.180
07/23/02	08:27:30	96.493
07/23/02	08:28:30	96.806
07/23/02	08:29:30	96.663
07/23/02	08:30:30	96.322
07/23/02	08:31:30	96.009
07/23/02	08:32:30	95.384
07/23/02	08:33:30	96.180
07/23/02	08:34:30	96.322
07/23/02	08:35:30	96.095
07/23/02	08:36:30	96.265
07/23/02	08:37:30	96.095
07/23/02	08:38:30	96.180
07/23/02	08:39:30	96.806
07/23/02	08:40:30	96.265
07/23/02	08:41:30	96.578
07/23/02	08:42:30	96.009
07/23/02	08:43:30	96.322
07/23/02	08:44:30	96.265
07/23/02	08:45:30	96.720
07/23/02	08:46:30	96.009
07/23/02	08:47:30	96.095
07/23/02	08:48:30	96.180
07/23/02	08:49:30	95.696
07/23/02	08:50:30	95.241
07/23/02	08:51:30	95.554
07/23/02	08:52:30	95.782
07/23/02	08:53:30	95.696
07/23/02	08:54:30	95.384
07/23/02	08:55:30	94.274
07/23/02	08:56:30	95.554
07/23/02	08:57:30	94.673
07/23/02	08:58:30	95.554
07/23/02	08:59:30	95.554
07/23/02	09:00:30	95.782
07/23/02	09:01:30	96.180
07/23/02	09:02:30	95.469
07/23/02	09:03:30	95.384
07/23/02	09:04:30	95.298
07/23/02	09:05:30	95.554
07/23/02	09:06:30	95.696
07/23/02	09:07:30	95.696
07/23/02	09:08:30	96.009
07/23/02	09:09:30	95.469
07/23/02	09:10:30	95.554
07/23/02	09:11:30	94.274
07/23/02	09:12:30	94.616
07/23/02	09:13:30	95.782
07/23/02	09:14:30	95.867
07/23/02	09:15:30	95.156
07/23/02	09:16:30	95.384
07/23/02	09:17:30	94.758
07/23/02	09:18:30	96.180
07/23/02	09:19:30	96.265
07/23/02	09:20:30	95.241
07/23/02	09:21:30	95.469
07/23/02	09:22:30	95.867
07/23/02	09:23:30	94.445
07/23/02	09:24:30	95.156
07/23/02	09:25:30	93.819
07/23/02	09:26:30	94.673
07/23/02	09:27:30	94.132
07/23/02	09:28:30	95.384
07/23/02	09:29:30	93.962
07/23/02	09:30:30	95.867
07/23/02	09:31:30	94.929
07/23/02	09:32:30	95.952
07/23/02	09:33:30	95.554
07/23/02	09:34:30	95.867
07/23/02	09:35:30	95.298
07/23/02	09:36:30	94.530
07/23/02	09:37:30	94.530
07/23/02	09:38:30	94.929
07/23/02	09:39:30	95.071
07/23/02	09:40:30	95.071
07/23/02	09:41:30	94.445
07/23/02	09:42:30	94.218
07/23/02	09:43:30	94.047
07/23/02	09:44:30	93.592
07/23/02	09:45:30	94.218
07/23/02	09:46:30	93.819
07/23/02	09:47:30	93.421
07/23/02	09:48:30	94.218
07/23/02	09:49:30	93.962
07/23/02	09:50:30	92.625
07/23/02	09:51:30	93.649
07/23/02	09:52:30	94.445
07/23/02	09:53:30	94.132
07/23/02	09:54:30	92.170
07/23/02	09:55:30	93.507
07/23/02	09:56:30	94.047
07/23/02	09:57:30	92.938
07/23/02	09:58:30	93.734
07/23/02	09:59:30	94.530
07/23/02	10:00:30	94.132
07/23/02	10:01:30	94.047
07/23/02	10:02:30	94.047
07/23/02	10:03:30	93.649
07/23/02	10:04:30	93.421
07/23/02	10:05:30	93.649
07/23/02	10:06:30	92.170
07/23/02	10:07:30	92.881
07/23/02	10:08:30	92.881
07/23/02	10:09:30	93.194
07/23/02	10:10:30	93.507
07/23/02	10:11:30	92.710
07/23/02	10:12:30	92.710
07/23/02	10:13:30	93.421
07/23/02	10:14:30	93.421
07/23/02	10:15:30	94.047
07/23/02	10:16:30	93.251
07/23/02	10:17:30	93.905
07/23/02	10:18:30	93.734
07/23/02	10:19:30	93.421
07/23/02	10:20:30	92.540
07/23/02	10:21:30	93.251
07/23/02	10:22:30	91.288
07/23/02	10:23:30	92.227
07/23/02	10:24:30	94.218
07/23/02	10:25:30	92.938
07/23/02	10:26:30	92.938
07/23/02	10:27:30	92.796
07/23/02	10:28:30	92.625
07/23/02	10:29:30	94.445
07/23/02	10:30:30	93.023
07/23/02	10:31:30	94.673
07/23/02	10:32:30	92.710
07/23/02	10:33:30	92.312
07/23/02	10:34:30	92.938
07/23/02	10:35:30	93.194
07/23/02	10:36:30	92.170
07/23/02	10:37:30	93.251
07/23/02	10:38:30	92.938
07/23/02	10:39:30	92.881
07/23/02	10:40:30	93.023
07/23/02	10:41:30	92.398
07/23/02	10:42:30	93.251
07/23/02	10:43:30	93.194
07/23/02	10:44:30	91.374
07/23/02	10:45:30	92.540
07/23/02	10:46:30	92.227
07/23/02	10:47:30	92.227
07/23/02	10:48:30	90.265
07/23/02	10:49:30	92.312
07/23/02	10:50:30	92.170
07/23/02	10:51:30	92.625
07/23/02	10:52:30	93.109
07/23/02	10:53:30	92.540
07/23/02	10:54:30	92.085
07/23/02	10:55:30	90.890
07/23/02	10:56:30	91.601
07/23/02	10:57:30	91.687
07/23/02	10:58:30	91.999
07/23/02	10:59:30	90.265
07/23/02	11:00:30	91.772
07/23/02	11:01:30	91.999
07/23/02	11:02:30	90.663
07/23/02	11:03:30	91.459
07/23/02	11:04:30	91.288
07/23/02	11:05:30	91.061
07/23/02	11:06:30	90.976
07/23/02	11:07:30	90.890
07/23/02	11:08:30	91.999
07/23/02	11:09:30	92.085
07/23/02	11:10:30	92.170
07/23/02	11:11:30	92.796
07/23/02	11:12:30	91.061
07/23/02	11:13:30	90.890
07/23/02	11:14:30	91.516
07/23/02	11:15:30	91.601
07/23/02	11:16:30	92.881
07/23/02	11:17:30	93.905
07/23/02	11:18:30	90.748
07/23/02	11:19:30	91.687
07/23/02	11:20:30	92.227
07/23/02	11:21:30	91.203
07/23/02	11:22:30	92.085
07/23/02	11:23:30	90.577
07/23/02	11:24:30	90.577

SOUTHBOUND ACCESS ROAD OF IH35 - NO. 7492 cont.

Date	Time	Pres (PSI)
07/23/02	11:25:30	90.350
07/23/02	11:26:30	90.663
07/23/02	11:27:30	91.601
07/23/02	11:28:30	92.796
07/23/02	11:29:30	91.374
07/23/02	11:30:30	91.601
07/23/02	11:31:30	93.194
07/23/02	11:32:30	91.061
07/23/02	11:33:30	91.687
07/23/02	11:34:30	92.710
07/23/02	11:35:30	91.857
07/23/02	11:36:30	91.288
07/23/02	11:37:30	91.772
07/23/02	11:38:30	90.265
07/23/02	11:39:30	92.085
07/23/02	11:40:30	93.336
07/23/02	11:41:30	91.516
07/23/02	11:42:30	90.833
07/23/02	11:43:30	89.952
07/23/02	11:44:30	89.411
07/23/02	11:45:30	91.146
07/23/02	11:46:30	92.085
07/23/02	11:47:30	91.146
07/23/02	11:48:30	89.866
07/23/02	11:49:30	91.203
07/23/02	11:50:30	91.146
07/23/02	11:51:30	91.601
07/23/02	11:52:30	91.687
07/23/02	11:53:30	88.843
07/23/02	11:54:30	87.591
07/23/02	11:55:30	91.288
07/23/02	11:56:30	91.601
07/23/02	11:57:30	91.857
07/23/02	11:58:30	90.037
07/23/02	11:59:30	90.748
07/23/02	12:00:30	91.516
07/23/02	12:01:30	86.568
07/23/02	12:02:30	88.843
07/23/02	12:03:30	88.388
07/23/02	12:04:30	88.388
07/23/02	12:05:30	87.591
07/23/02	12:06:30	88.445
07/23/02	12:07:30	86.340
07/23/02	12:08:30	88.445
07/23/02	12:09:30	87.279
07/23/02	12:10:30	88.701
07/23/02	12:11:30	88.445
07/23/02	12:12:30	89.554
07/23/02	12:13:30	89.468
07/23/02	12:14:30	87.904
07/23/02	12:15:30	88.615
07/23/02	12:16:30	89.724
07/23/02	12:17:30	89.156
07/23/02	12:18:30	88.388
07/23/02	12:19:30	89.013
07/23/02	12:20:30	89.013
07/23/02	12:21:30	90.037
07/23/02	12:22:30	89.013
07/23/02	12:23:30	88.075
07/23/02	12:24:30	89.156
07/23/02	12:25:30	87.762
07/23/02	12:26:30	88.530
07/23/02	12:27:30	88.132
07/23/02	12:28:30	89.013
07/23/02	12:29:30	89.326
07/23/02	12:30:30	88.530
07/23/02	12:31:30	88.530
07/23/02	12:32:30	90.890
07/23/02	12:33:30	89.156
07/23/02	12:34:30	90.179
07/23/02	12:35:30	89.156
07/23/02	12:36:30	90.265
07/23/02	12:37:30	90.122
07/23/02	12:38:30	90.890
07/23/02	12:39:30	91.288
07/23/02	12:40:30	90.663
07/23/02	12:41:30	90.577
07/23/02	12:42:30	91.288
07/23/02	12:43:30	89.326
07/23/02	12:44:30	91.061
07/23/02	12:45:30	90.833
07/23/02	12:46:30	89.724
07/23/02	12:47:30	91.601
07/23/02	12:48:30	91.914
07/23/02	12:49:30	90.037
07/23/02	12:50:30	91.374
07/23/02	12:51:30	90.350
07/23/02	12:52:30	90.350
07/23/02	12:53:30	91.857
07/23/02	12:54:30	91.288
07/23/02	12:55:30	93.194
07/23/02	12:56:30	91.146
07/23/02	12:57:30	90.748
07/23/02	12:58:30	91.999
07/23/02	12:59:30	91.914
07/23/02	13:00:30	91.914
07/23/02	13:01:30	93.194
07/23/02	13:02:30	92.227
07/23/02	13:03:30	91.601
07/23/02	13:04:30	89.326
07/23/02	13:05:30	90.663
07/23/02	13:06:30	92.085
07/23/02	13:07:30	89.866
07/23/02	13:08:30	90.492
07/23/02	13:09:30	92.540
07/23/02	13:10:30	93.336
07/23/02	13:11:30	93.251
07/23/02	13:12:30	93.819
07/23/02	13:13:30	92.540
07/23/02	13:14:30	92.938
07/23/02	13:15:30	94.530
07/23/02	13:16:30	93.194
07/23/02	13:17:30	72.149
07/23/02	13:18:30	79.543
07/23/02	13:19:30	36.458
07/23/02	13:20:30	37.482
07/23/02	13:21:30	34.496
07/23/02	13:22:30	34.269
07/23/02	13:23:30	34.013
07/23/02	13:24:30	94.758
07/23/02	13:25:30	46.384
07/23/02	13:26:30	36.373
07/23/02	13:27:30	33.160
07/23/02	13:28:30	49.768
07/23/02	13:29:30	91.459
07/23/02	13:30:30	92.540
07/23/02	13:31:30	93.649
07/23/02	13:32:30	92.483
07/23/02	13:33:30	94.218
07/23/02	13:34:30	91.772
07/23/02	13:35:30	92.540
07/23/02	13:36:30	91.459
07/23/02	13:37:30	90.976
07/23/02	13:38:30	90.976
07/23/02	13:39:30	91.374
07/23/02	13:40:30	93.819
07/23/02	13:41:30	93.194
07/23/02	13:42:30	92.625
07/23/02	13:43:30	92.710
07/23/02	13:44:30	91.999
07/23/02	13:45:30	90.976
07/23/02	13:46:30	91.203
07/23/02	13:47:30	90.976
07/23/02	13:48:30	92.085
07/23/02	13:49:30	90.890
07/23/02	13:50:30	90.492
07/23/02	13:51:30	93.023
07/23/02	13:52:30	92.227
07/23/02	13:53:30	90.663
07/23/02	13:54:30	91.061
07/23/02	13:55:30	91.061
07/23/02	13:56:30	91.687
07/23/02	13:57:30	94.843
07/23/02	13:58:30	92.312
07/23/02	13:59:30	93.109
07/23/02	14:00:30	91.516
07/23/02	14:01:30	89.810
07/23/02	14:02:30	89.241
07/23/02	14:03:30	91.857
07/23/02	14:04:30	90.492
07/23/02	14:05:30	90.890
07/23/02	14:06:30	91.203
07/23/02	14:07:30	93.023
07/23/02	14:08:30	91.516
07/23/02	14:09:30	91.146
07/23/02	14:10:30	92.710
07/23/02	14:11:30	90.748
07/23/02	14:12:30	90.890
07/23/02	14:13:30	90.890
07/23/02	14:14:30	91.516
07/23/02	14:15:30	91.857
07/23/02	14:16:30	92.312
07/23/02	14:17:30	90.577
07/23/02	14:18:30	91.146
07/23/02	14:19:30	91.772
07/23/02	14:20:30	92.085
07/23/02	14:21:30	91.146
07/23/02	14:22:30	89.639
07/23/02	14:23:30	89.866
07/23/02	14:24:30	90.435
07/23/02	14:25:30	90.492
07/23/02	14:26:30	91.914
07/23/02	14:27:30	90.663
07/23/02	14:28:30	89.013
07/23/02	14:29:30	91.914
07/23/02	14:30:30	91.061
07/23/02	14:31:30	90.492
07/23/02	14:32:30	90.435
07/23/02	14:33:30	90.748
07/23/02	14:34:30	89.866
07/23/02	14:35:30	90.179
07/23/02	14:36:30	90.748
07/23/02	14:37:30	89.554
07/23/02	14:38:30	89.468
07/23/02	14:39:30	90.890
07/23/02	14:40:30	91.374
07/23/02	14:41:30	91.374
07/23/02	14:42:30	91.772
07/23/02	14:43:30	90.179
07/23/02	14:44:30	90.435
07/23/02	14:45:30	90.179
07/23/02	14:46:30	90.577
07/23/02	14:47:30	90.663
07/23/02	14:48:30	90.037
07/23/02	14:49:30	90.976
07/23/02	14:50:30	91.687
07/23/02	14:51:30	90.037
07/23/02	14:52:30	89.724
07/23/02	14:53:30	87.990
07/23/02	14:54:30	90.179
07/23/02	14:55:30	90.663
07/23/02	14:56:30	89.554
07/23/02	14:57:30	90.122
07/23/02	14:58:30	91.146
07/23/02	14:59:30	89.326
07/23/02	15:00:30	90.577
07/23/02	15:01:30	88.445
07/23/02	15:02:30	90.663
07/23/02	15:03:30	88.701
07/23/02	15:04:30	89.411
07/23/02	15:05:30	88.388
07/23/02	15:06:30	90.748
07/23/02	15:07:30	90.179
07/23/02	15:08:30	90.663
07/23/02	15:09:30	90.122
07/23/02	15:10:30	89.411
07/23/02	15:11:30	89.810
07/23/02	15:12:30	90.435
07/23/02	15:13:30	89.952
07/23/02	15:14:30	88.843
07/23/02	15:15:30	89.468
07/23/02	15:16:30	90.492
07/23/02	15:17:30	89.952
07/23/02	15:18:30	91.459
07/23/02	15:19:30	91.288
07/23/02	15:20:30	89.013
07/23/02	15:21:30	88.928
07/23/02	15:22:30	89.554
07/23/02	15:23:30	89.411
07/23/02	15:24:30	88.701
07/23/02	15:25:30	89.639
07/23/02	15:26:30	89.326
07/23/02	15:27:30	90.122
07/23/02	15:28:30	89.810
07/23/02	15:29:30	89.724
07/23/02	15:30:30	88.615
07/23/02	15:31:30	90.265
07/23/02	15:32:30	90.492
07/23/02	15:33:30	89.411
07/23/02	15:34:30	91.146
07/23/02	15:35:30	91.288
07/23/02	15:36:30	89.554
07/23/02	15:37:30	91.459
07/23/02	15:38:30	90.663
07/23/02	15:39:30	89.952
07/23/02	15:40:30	90.663
07/23/02	15:41:30	89.468
07/23/02	15:42:30	89.952
07/23/02	15:43:30	89.810
07/23/02	15:44:30	88.928
07/23/02	15:45:30	89.639
07/23/02	15:46:30	89.724
07/23/02	15:47:30	89.810
07/23/02	15:48:30	90.435

SOUTHBOUND ACCESS ROAD OF IH35 - NO. 7492 cont.

Date	Time	Pres (PSI)
07/23/02	15:49:30	90.350
07/23/02	15:50:30	89.326
07/23/02	15:51:30	90.435
07/23/02	15:52:30	88.075
07/23/02	15:53:30	90.976
07/23/02	15:54:30	89.468
07/23/02	15:55:30	87.762
07/23/02	15:56:30	88.530
07/23/02	15:57:30	89.810
07/23/02	15:58:30	88.388
07/23/02	15:59:30	89.468
07/23/02	16:00:30	88.615
07/23/02	16:01:30	89.810
07/23/02	16:02:30	88.302
07/23/02	16:03:30	89.099
07/23/02	16:04:30	88.928
07/23/02	16:05:30	89.241
07/23/02	16:06:30	89.156
07/23/02	16:07:30	87.364
07/23/02	16:08:30	87.591
07/23/02	16:09:30	88.928
07/23/02	16:10:30	87.819
07/23/02	16:11:30	87.762
07/23/02	16:12:30	89.326
07/23/02	16:13:30	88.302
07/23/02	16:14:30	88.786
07/23/02	16:15:30	89.952
07/23/02	16:16:30	91.516
07/23/02	16:17:30	88.217
07/23/02	16:18:30	87.591
07/23/02	16:19:30	88.132
07/23/02	16:20:30	88.615
07/23/02	16:21:30	88.843
07/23/02	16:22:30	90.037
07/23/02	16:23:30	90.890
07/23/02	16:24:30	90.890
07/23/02	16:25:30	89.639
07/23/02	16:26:30	91.516
07/23/02	16:27:30	90.265
07/23/02	16:28:30	90.833
07/23/02	16:29:30	90.179
07/23/02	16:30:30	90.890
07/23/02	16:31:30	91.459
07/23/02	16:32:30	91.772
07/23/02	16:33:30	92.227
07/23/02	16:34:30	91.687
07/23/02	16:35:30	91.288
07/23/02	16:36:30	91.857
07/23/02	16:37:30	93.592
07/23/02	16:38:30	92.938
07/23/02	16:39:30	92.710
07/23/02	16:40:30	91.516
07/23/02	16:41:30	92.625
07/23/02	16:42:30	92.085
07/23/02	16:43:30	93.421
07/23/02	16:44:30	90.577
07/23/02	16:45:30	92.938
07/23/02	16:46:30	92.227
07/23/02	16:47:30	93.023
07/23/02	16:48:30	92.881
07/23/02	16:49:30	92.483
07/23/02	16:50:30	92.540
07/23/02	16:51:30	93.592
07/23/02	16:52:30	93.109
07/23/02	16:53:30	93.336
07/23/02	16:54:30	94.758
07/23/02	16:55:30	92.483
07/23/02	16:56:30	93.905
07/23/02	16:57:30	93.507
07/23/02	16:58:30	93.507
07/23/02	16:59:30	91.857
07/23/02	17:00:30	94.445
07/23/02	17:01:30	94.132
07/23/02	17:02:30	93.421
07/23/02	17:03:30	94.218
07/23/02	17:04:30	93.962
07/23/02	17:05:30	93.023
07/23/02	17:06:30	93.507
07/23/02	17:07:30	93.336
07/23/02	17:08:30	92.398
07/23/02	17:09:30	93.336
07/23/02	17:10:30	91.061
07/23/02	17:11:30	93.507
07/23/02	17:12:30	93.734
07/23/02	17:13:30	93.962
07/23/02	17:14:30	93.962
07/23/02	17:15:30	92.540
07/23/02	17:16:30	93.023
07/23/02	17:17:30	92.625
07/23/02	17:18:30	92.312
07/23/02	17:19:30	92.312
07/23/02	17:20:30	93.421
07/23/02	17:21:30	92.483
07/23/02	17:22:30	91.914
07/23/02	17:23:30	91.772
07/23/02	17:24:30	94.616
07/23/02	17:25:30	91.772
07/23/02	17:26:30	94.843
07/23/02	17:27:30	92.938
07/23/02	17:28:30	92.483
07/23/02	17:29:30	91.516
07/23/02	17:30:30	93.194
07/23/02	17:31:30	92.881
07/23/02	17:32:30	93.336
07/23/02	17:33:30	92.710
07/23/02	17:34:30	91.914
07/23/02	17:35:30	93.023
07/23/02	17:36:30	91.459
07/23/02	17:37:30	93.194
07/23/02	17:38:30	92.540
07/23/02	17:39:30	92.710
07/23/02	17:40:30	92.227
07/23/02	17:41:30	92.881
07/23/02	17:42:30	91.857
07/23/02	17:43:30	92.540
07/23/02	17:44:30	91.374
07/23/02	17:45:30	94.274
07/23/02	17:46:30	92.710
07/23/02	17:47:30	92.483
07/23/02	17:48:30	91.687
07/23/02	17:49:30	93.819
07/23/02	17:50:30	93.251
07/23/02	17:51:30	93.336
07/23/02	17:52:30	93.592
07/23/02	17:53:30	92.710
07/23/02	17:54:30	91.516
07/23/02	17:55:30	92.483
07/23/02	17:56:30	92.881
07/23/02	17:57:30	93.962
07/23/02	17:58:30	91.203
07/23/02	17:59:30	93.336
07/23/02	18:00:30	92.312
07/23/02	18:01:30	92.312
07/23/02	18:02:30	92.710
07/23/02	18:03:30	94.218
07/23/02	18:04:30	92.625
07/23/02	18:05:30	91.146
07/23/02	18:06:30	91.459
07/23/02	18:07:30	93.109
07/23/02	18:08:30	92.170
07/23/02	18:09:30	92.085
07/23/02	18:10:30	90.748
07/23/02	18:11:30	93.109
07/23/02	18:12:30	92.085
07/23/02	18:13:30	93.734
07/23/02	18:14:30	92.170
07/23/02	18:15:30	92.796
07/23/02	18:16:30	92.625
07/23/02	18:17:30	92.227
07/23/02	18:18:30	91.203
07/23/02	18:19:30	90.976
07/23/02	18:20:30	91.999
07/23/02	18:21:30	92.796
07/23/02	18:22:30	92.227
07/23/02	18:23:30	92.625
07/23/02	18:24:30	92.170
07/23/02	18:25:30	91.374
07/23/02	18:26:30	92.085
07/23/02	18:27:30	91.772
07/23/02	18:28:30	90.976
07/23/02	18:29:30	91.459
07/23/02	18:30:30	93.649
07/23/02	18:31:30	92.085
07/23/02	18:32:30	91.999
07/23/02	18:33:30	93.507
07/23/02	18:34:30	91.772
07/23/02	18:35:30	91.146
07/23/02	18:36:30	91.999
07/23/02	18:37:30	92.312
07/23/02	18:38:30	91.999
07/23/02	18:39:30	93.023
07/23/02	18:40:30	92.227
07/23/02	18:41:30	93.109
07/23/02	18:42:30	92.085
07/23/02	18:43:30	92.312
07/23/02	18:44:30	92.312
07/23/02	18:45:30	92.312
07/23/02	18:46:30	92.540
07/23/02	18:47:30	93.109
07/23/02	18:48:30	91.516
07/23/02	18:49:30	93.023
07/23/02	18:50:30	90.890
07/23/02	18:51:30	90.492
07/23/02	18:52:30	92.796
07/23/02	18:53:30	91.374
07/23/02	18:54:30	92.625
07/23/02	18:55:30	92.483
07/23/02	18:56:30	93.109
07/23/02	18:57:30	91.061
07/23/02	18:58:30	92.312
07/23/02	18:59:30	91.459
07/23/02	19:00:30	90.833
07/23/02	19:01:30	91.146
07/23/02	19:02:30	91.857
07/23/02	19:03:30	91.999
07/23/02	19:04:30	91.857
07/23/02	19:05:30	90.435
07/23/02	19:06:30	91.857
07/23/02	19:07:30	91.772
07/23/02	19:08:30	90.179
07/23/02	19:09:30	90.976
07/23/02	19:10:30	92.398
07/23/02	19:11:30	92.398
07/23/02	19:12:30	91.772
07/23/02	19:13:30	91.687
07/23/02	19:14:30	90.577
07/23/02	19:15:30	92.170
07/23/02	19:16:30	91.516
07/23/02	19:17:30	91.288
07/23/02	19:18:30	90.890
07/23/02	19:19:30	91.914
07/23/02	19:20:30	91.772
07/23/02	19:21:30	91.374
07/23/02	19:22:30	91.203
07/23/02	19:23:30	91.857
07/23/02	19:24:30	91.374
07/23/02	19:25:30	90.748
07/23/02	19:26:30	91.857
07/23/02	19:27:30	90.976
07/23/02	19:28:30	91.203
07/23/02	19:29:30	90.890
07/23/02	19:30:30	91.516
07/23/02	19:31:30	91.687
07/23/02	19:32:30	91.516
07/23/02	19:33:30	90.890
07/23/02	19:34:30	91.687
07/23/02	19:35:30	91.601
07/23/02	19:36:30	91.146
07/23/02	19:37:30	91.459
07/23/02	19:38:30	92.312
07/23/02	19:39:30	91.772
07/23/02	19:40:30	90.492
07/23/02	19:41:30	91.203
07/23/02	19:42:30	90.577
07/23/02	19:43:30	91.687
07/23/02	19:44:30	91.999
07/23/02	19:45:30	91.601
07/23/02	19:46:30	91.374
07/23/02	19:47:30	90.833
07/23/02	19:48:30	91.459
07/23/02	19:49:30	92.085
07/23/02	19:50:30	91.061
07/23/02	19:51:30	92.710
07/23/02	19:52:30	91.772
07/23/02	19:53:30	91.914
07/23/02	19:54:30	90.179
07/23/02	19:55:30	91.687
07/23/02	19:56:30	91.772
07/23/02	19:57:30	90.833
07/23/02	19:58:30	91.203
07/23/02	19:59:30	91.687
07/23/02	20:00:30	91.374
07/23/02	20:01:30	91.203
07/23/02	20:02:30	90.663
07/23/02	20:03:30	91.146
07/23/02	20:04:30	92.540
07/23/02	20:05:30	91.516
07/23/02	20:06:30	90.748
07/23/02	20:07:30	91.516
07/23/02	20:08:30	91.459
07/23/02	20:09:30	91.061
07/23/02	20:10:30	90.976
07/23/02	20:11:30	91.374
07/23/02	20:12:30	92.796

SOUTHBOUND ACCESS ROAD OF IH35 - NO. 7492 cont.

Date	Time	Pres (PSI)
07/23/02	20:13:30	91.857
07/23/02	20:14:30	90.833
07/23/02	20:15:30	90.435
07/23/02	20:16:30	91.999
07/23/02	20:17:30	91.459
07/23/02	20:18:30	91.146
07/23/02	20:19:30	91.459
07/23/02	20:20:30	91.999
07/23/02	20:21:30	91.146
07/23/02	20:22:30	91.516
07/23/02	20:23:30	91.914
07/23/02	20:24:30	92.170
07/23/02	20:25:30	91.914
07/23/02	20:26:30	91.203
07/23/02	20:27:30	92.312
07/23/02	20:28:30	92.227
07/23/02	20:29:30	92.398
07/23/02	20:30:30	92.170
07/23/02	20:31:30	92.540
07/23/02	20:32:30	92.938
07/23/02	20:33:30	93.194
07/23/02	20:34:30	92.170
07/23/02	20:35:30	92.881
07/23/02	20:36:30	93.194
07/23/02	20:37:30	93.507
07/23/02	20:38:30	93.421
07/23/02	20:39:30	93.023
07/23/02	20:40:30	92.881
07/23/02	20:41:30	92.398
07/23/02	20:42:30	93.962
07/23/02	20:43:30	93.649
07/23/02	20:44:30	93.251
07/23/02	20:45:30	92.540
07/23/02	20:46:30	94.758
07/23/02	20:47:30	92.625
07/23/02	20:48:30	94.360
07/23/02	20:49:30	93.962
07/23/02	20:50:30	92.938
07/23/02	20:51:30	94.047
07/23/02	20:52:30	94.616
07/23/02	20:53:30	94.929
07/23/02	20:54:30	94.929
07/23/02	20:55:30	95.384
07/23/02	20:56:30	94.758
07/23/02	20:57:30	95.952
07/23/02	20:58:30	96.322
07/23/02	20:59:30	96.009
07/23/02	21:00:30	91.999
07/23/02	21:01:30	92.938
07/23/02	21:02:30	93.023
07/23/02	21:03:30	93.023
07/23/02	21:04:30	93.962
07/23/02	21:05:30	93.109
07/23/02	21:06:30	94.274
07/23/02	21:07:30	93.819
07/23/02	21:08:30	94.985
07/23/02	21:09:30	92.540
07/23/02	21:10:30	94.218
07/23/02	21:11:30	94.218
07/23/02	21:12:30	93.819
07/23/02	21:13:30	93.194
07/23/02	21:14:30	93.507
07/23/02	21:15:30	94.758
07/23/02	21:16:30	94.047
07/23/02	21:17:30	93.905
07/23/02	21:18:30	94.132
07/23/02	21:19:30	93.592
07/23/02	21:20:30	92.085
07/23/02	21:21:30	93.592
07/23/02	21:22:30	93.336
07/23/02	21:23:30	93.962
07/23/02	21:24:30	94.274
07/23/02	21:25:30	93.649
07/23/02	21:26:30	94.218
07/23/02	21:27:30	94.360
07/23/02	21:28:30	94.047
07/23/02	21:29:30	94.530
07/23/02	21:30:30	93.734
07/23/02	21:31:30	94.274
07/23/02	21:32:30	94.132
07/23/02	21:33:30	93.905
07/23/02	21:34:30	94.132
07/23/02	21:35:30	93.962
07/23/02	21:36:30	93.507
07/23/02	21:37:30	93.507
07/23/02	21:38:30	93.507
07/23/02	21:39:30	93.819
07/23/02	21:40:30	93.905
07/23/02	21:41:30	94.445
07/23/02	21:42:30	94.360
07/23/02	21:43:30	93.734
07/23/02	21:44:30	93.962
07/23/02	21:45:30	94.218
07/23/02	21:46:30	93.819
07/23/02	21:47:30	94.047
07/23/02	21:48:30	93.734
07/23/02	21:49:30	93.905
07/23/02	21:50:30	94.047
07/23/02	21:51:30	94.758
07/23/02	21:52:30	94.218
07/23/02	21:53:30	92.540
07/23/02	21:54:30	93.962
07/23/02	21:55:30	94.673
07/23/02	21:56:30	94.758
07/23/02	21:57:30	93.507
07/23/02	21:58:30	94.047
07/23/02	21:59:30	93.194
07/23/02	22:00:30	88.445
07/23/02	22:01:30	88.530
07/23/02	22:02:30	87.677
07/23/02	22:03:30	88.217
07/23/02	22:04:30	88.615
07/23/02	22:05:30	88.445
07/23/02	22:06:30	88.388
07/23/02	22:07:30	87.990
07/23/02	22:08:30	88.302
07/23/02	22:09:30	88.530
07/23/02	22:10:30	87.677
07/23/02	22:11:30	88.302
07/23/02	22:12:30	88.302
07/23/02	22:13:30	87.990
07/23/02	22:14:30	87.990
07/23/02	22:15:30	88.445
07/23/02	22:16:30	88.075
07/23/02	22:17:30	87.506
07/23/02	22:18:30	87.421
07/23/02	22:19:30	86.880
07/23/02	22:20:30	86.084
07/23/02	22:21:30	89.866
07/23/02	22:22:30	91.203
07/23/02	22:23:30	92.170
07/23/02	22:24:30	91.914
07/23/02	22:25:30	92.227
07/23/02	22:26:30	92.312
07/23/02	22:27:30	91.203
07/23/02	22:28:30	91.601
07/23/02	22:29:30	91.857
07/23/02	22:30:30	91.516
07/23/02	22:31:30	91.857
07/23/02	22:32:30	91.061
07/23/02	22:33:30	91.374
07/23/02	22:34:30	91.288
07/23/02	22:35:30	88.388
07/23/02	22:36:30	90.179
07/23/02	22:37:30	90.492
07/23/02	22:38:30	90.663
07/23/02	22:39:30	90.833
07/23/02	22:40:30	90.748
07/23/02	22:41:30	90.748
07/23/02	22:42:30	89.013
07/23/02	22:43:30	90.577
07/23/02	22:44:30	90.179
07/23/02	22:45:30	90.122
07/23/02	22:46:30	90.833
07/23/02	22:47:30	90.890
07/23/02	22:48:30	90.265
07/23/02	22:49:30	90.492
07/23/02	22:50:30	90.890
07/23/02	22:51:30	90.122
07/23/02	22:52:30	90.748
07/23/02	22:53:30	90.833
07/23/02	22:54:30	90.890
07/23/02	22:55:30	88.615
07/23/02	22:56:30	90.976
07/23/02	22:57:30	90.265
07/23/02	22:58:30	90.492
07/23/02	22:59:30	90.350
07/23/02	23:00:30	90.833
07/23/02	23:01:30	90.122
07/23/02	23:02:30	89.013
07/23/02	23:03:30	89.639
07/23/02	23:04:30	89.554
07/23/02	23:05:30	89.554
07/23/02	23:06:30	89.156
07/23/02	23:07:30	89.156
07/23/02	23:08:30	89.411
07/23/02	23:09:30	89.554
07/23/02	23:10:30	89.326
07/23/02	23:11:30	88.843
07/23/02	23:12:30	88.786
07/23/02	23:13:30	89.013
07/23/02	23:14:30	89.554
07/23/02	23:15:30	88.530
07/23/02	23:16:30	89.411
07/23/02	23:17:30	88.928
07/23/02	23:18:30	89.810
07/23/02	23:19:30	89.810
07/23/02	23:20:30	90.037
07/23/02	23:21:30	89.724
07/23/02	23:22:30	89.810
07/23/02	23:23:30	89.326
07/23/02	23:24:30	89.099
07/23/02	23:25:30	89.099
07/23/02	23:26:30	90.350
07/23/02	23:27:30	90.577
07/23/02	23:28:30	90.890
07/23/02	23:29:30	89.554
07/23/02	23:30:30	90.976
07/23/02	23:31:30	90.833
07/23/02	23:32:30	90.265
07/23/02	23:33:30	90.833
07/23/02	23:34:30	90.748
07/23/02	23:35:30	89.156
07/23/02	23:36:30	90.037
07/23/02	23:37:30	90.577
07/23/02	23:38:30	90.663
07/23/02	23:39:30	91.146
07/23/02	23:40:30	90.577
07/23/02	23:41:30	89.554
07/23/02	23:42:30	90.122
07/23/02	23:43:30	89.866
07/23/02	23:44:30	89.810
07/23/02	23:45:30	89.952
07/23/02	23:46:30	90.350
07/23/02	23:47:30	90.179
07/23/02	23:48:30	90.350
07/23/02	23:49:30	90.663
07/23/02	23:50:30	90.748
07/23/02	23:51:30	90.748
07/23/02	23:52:30	90.179
07/23/02	23:53:30	90.833
07/23/02	23:54:30	90.833
07/23/02	23:55:30	89.952
07/23/02	23:56:30	90.748
07/23/02	23:57:30	91.516
07/23/02	23:58:30	91.516
07/23/02	23:59:30	91.772
07/24/02	00:00:30	91.687
07/24/02	00:01:30	91.516
07/24/02	00:02:30	90.435
07/24/02	00:03:30	91.203
07/24/02	00:04:30	91.203
07/24/02	00:05:30	91.061
07/24/02	00:06:30	91.374
07/24/02	00:07:30	90.577
07/24/02	00:08:30	91.061
07/24/02	00:09:30	91.146
07/24/02	00:10:30	91.203
07/24/02	00:11:30	91.772
07/24/02	00:12:30	91.914
07/24/02	00:13:30	91.999
07/24/02	00:14:30	91.857
07/24/02	00:15:30	88.075
07/24/02	00:16:30	89.241
07/24/02	00:17:30	88.615
07/24/02	00:18:30	89.156
07/24/02	00:19:30	88.786
07/24/02	00:20:30	89.156
07/24/02	00:21:30	88.615
07/24/02	00:22:30	88.445
07/24/02	00:23:30	88.701
07/24/02	00:24:30	88.302
07/24/02	00:25:30	88.701
07/24/02	00:26:30	88.217
07/24/02	00:27:30	88.530
07/24/02	00:28:30	88.615
07/24/02	00:29:30	88.302
07/24/02	00:30:30	88.388
07/24/02	00:31:30	88.217
07/24/02	00:32:30	88.388
07/24/02	00:33:30	88.928
07/24/02	00:34:30	88.843
07/24/02	00:35:30	88.445
07/24/02	00:36:30	88.445

SOUTHBOUND ACCESS ROAD OF IH35 - NO. 7492 cont.

Date	Time	Pres (PSI)
07/24/02	00:37:30	88.615
07/24/02	00:38:30	88.928
07/24/02	00:39:30	88.928
07/24/02	00:40:30	88.843
07/24/02	00:41:30	90.435
07/24/02	00:42:30	90.265
07/24/02	00:43:30	90.350
07/24/02	00:44:30	89.866
07/24/02	00:45:30	90.350
07/24/02	00:46:30	90.037
07/24/02	00:47:30	88.928
07/24/02	00:48:30	89.099
07/24/02	00:49:30	89.099
07/24/02	00:50:30	89.013
07/24/02	00:51:30	89.156
07/24/02	00:52:30	89.156
07/24/02	00:53:30	89.013
07/24/02	00:54:30	89.013
07/24/02	00:55:30	90.976
07/24/02	00:56:30	91.146
07/24/02	00:57:30	91.857
07/24/02	00:58:30	91.914
07/24/02	00:59:30	91.516
07/24/02	01:00:30	91.772
07/24/02	01:01:30	90.663
07/24/02	01:02:30	90.122
07/24/02	01:03:30	90.663
07/24/02	01:04:30	90.577
07/24/02	01:05:30	90.748
07/24/02	01:06:30	90.435
07/24/02	01:07:30	90.435
07/24/02	01:08:30	90.663
07/24/02	01:09:30	90.350
07/24/02	01:10:30	90.577
07/24/02	01:11:30	90.435
07/24/02	01:12:30	90.435
07/24/02	01:13:30	90.350
07/24/02	01:14:30	90.265
07/24/02	01:15:30	88.701
07/24/02	01:16:30	89.554
07/24/02	01:17:30	90.265
07/24/02	01:18:30	90.833
07/24/02	01:19:30	90.833
07/24/02	01:20:30	90.976
07/24/02	01:21:30	92.227
07/24/02	01:22:30	92.170
07/24/02	01:23:30	91.857
07/24/02	01:24:30	91.999
07/24/02	01:25:30	91.516
07/24/02	01:26:30	91.687
07/24/02	01:27:30	91.687
07/24/02	01:28:30	91.857
07/24/02	01:29:30	91.601
07/24/02	01:30:30	91.516
07/24/02	01:31:30	91.203
07/24/02	01:32:30	91.772
07/24/02	01:33:30	91.999
07/24/02	01:34:30	92.085
07/24/02	01:35:30	91.857
07/24/02	01:36:30	91.772
07/24/02	01:37:30	91.601
07/24/02	01:38:30	91.516
07/24/02	01:39:30	91.772
07/24/02	01:40:30	91.687
07/24/02	01:41:30	91.516
07/24/02	01:42:30	91.203
07/24/02	01:43:30	91.374
07/24/02	01:44:30	91.146
07/24/02	01:45:30	91.203
07/24/02	01:46:30	91.146
07/24/02	01:47:30	90.122
07/24/02	01:48:30	90.435
07/24/02	01:49:30	90.435
07/24/02	01:50:30	90.350
07/24/02	01:51:30	90.265
07/24/02	01:52:30	90.265
07/24/02	01:53:30	89.952
07/24/02	01:54:30	90.122
07/24/02	01:55:30	88.388
07/24/02	01:56:30	89.468
07/24/02	01:57:30	89.639
07/24/02	01:58:30	89.866
07/24/02	01:59:30	89.866
07/24/02	02:00:30	86.397
07/24/02	02:01:30	88.302
07/24/02	02:02:30	87.506
07/24/02	02:03:30	87.364
07/24/02	02:04:30	87.108
07/24/02	02:05:30	87.193
07/24/02	02:06:30	87.108
07/24/02	02:07:30	87.108
07/24/02	02:08:30	87.279
07/24/02	02:09:30	87.279
07/24/02	02:10:30	87.819
07/24/02	02:11:30	89.411
07/24/02	02:12:30	89.241
07/24/02	02:13:30	89.241
07/24/02	02:14:30	89.411
07/24/02	02:15:30	89.156
07/24/02	02:16:30	89.099
07/24/02	02:17:30	89.411
07/24/02	02:18:30	89.866
07/24/02	02:19:30	90.037
07/24/02	02:20:30	87.364
07/24/02	02:21:30	88.928
07/24/02	02:22:30	88.786
07/24/02	02:23:30	88.445
07/24/02	02:24:30	88.928
07/24/02	02:25:30	88.843
07/24/02	02:26:30	88.075
07/24/02	02:27:30	88.217
07/24/02	02:28:30	87.990
07/24/02	02:29:30	88.075
07/24/02	02:30:30	86.169
07/24/02	02:31:30	87.506
07/24/02	02:32:30	87.677
07/24/02	02:33:30	87.506
07/24/02	02:34:30	87.819
07/24/02	02:35:30	86.880
07/24/02	02:36:30	88.075
07/24/02	02:37:30	88.530
07/24/02	02:38:30	88.530
07/24/02	02:39:30	88.445
07/24/02	02:40:30	87.279
07/24/02	02:41:30	90.890
07/24/02	02:42:30	90.976
07/24/02	02:43:30	90.833
07/24/02	02:44:30	90.890
07/24/02	02:45:30	91.061
07/24/02	02:46:30	91.146
07/24/02	02:47:30	90.265
07/24/02	02:48:30	90.492
07/24/02	02:49:30	90.435
07/24/02	02:50:30	87.108
07/24/02	02:51:30	89.724
07/24/02	02:52:30	89.411
07/24/02	02:53:30	89.156
07/24/02	02:54:30	88.928
07/24/02	02:55:30	89.156
07/24/02	02:56:30	90.435
07/24/02	02:57:30	90.122
07/24/02	02:58:30	90.265
07/24/02	02:59:30	90.265
07/24/02	03:00:30	89.810
07/24/02	03:01:30	90.265
07/24/02	03:02:30	90.890
07/24/02	03:03:30	91.203
07/24/02	03:04:30	91.061
07/24/02	03:05:30	90.663
07/24/02	03:06:30	91.146
07/24/02	03:07:30	91.203
07/24/02	03:08:30	91.374
07/24/02	03:09:30	91.061
07/24/02	03:10:30	89.866
07/24/02	03:11:30	91.687
07/24/02	03:12:30	91.914
07/24/02	03:13:30	91.914
07/24/02	03:14:30	91.857
07/24/02	03:15:30	91.374
07/24/02	03:16:30	91.857
07/24/02	03:17:30	89.639
07/24/02	03:18:30	90.833
07/24/02	03:19:30	90.435
07/24/02	03:20:30	91.146
07/24/02	03:21:30	91.288
07/24/02	03:22:30	91.601
07/24/02	03:23:30	90.748
07/24/02	03:24:30	91.146
07/24/02	03:25:30	91.146
07/24/02	03:26:30	90.976
07/24/02	03:27:30	91.203
07/24/02	03:28:30	91.146
07/24/02	03:29:30	90.976
07/24/02	03:30:30	89.468
07/24/02	03:31:30	90.122
07/24/02	03:32:30	90.122
07/24/02	03:33:30	90.122
07/24/02	03:34:30	90.492
07/24/02	03:35:30	90.435
07/24/02	03:36:30	90.350
07/24/02	03:37:30	90.435
07/24/02	03:38:30	90.435
07/24/02	03:39:30	89.952
07/24/02	03:40:30	90.663
07/24/02	03:41:30	91.914
07/24/02	03:42:30	92.170
07/24/02	03:43:30	92.085
07/24/02	03:44:30	91.999
07/24/02	03:45:30	91.516
07/24/02	03:46:30	92.398
07/24/02	03:47:30	91.516
07/24/02	03:48:30	91.857
07/24/02	03:49:30	91.772
07/24/02	03:50:30	89.411
07/24/02	03:51:30	88.302
07/24/02	03:52:30	87.819
07/24/02	03:53:30	87.762
07/24/02	03:54:30	87.819
07/24/02	03:55:30	86.340
07/24/02	03:56:30	86.880
07/24/02	03:57:30	86.710
07/24/02	03:58:30	86.710
07/24/02	03:59:30	86.653
07/24/02	04:00:30	87.051
07/24/02	04:01:30	89.554
07/24/02	04:02:30	88.843
07/24/02	04:03:30	89.156
07/24/02	04:04:30	89.156
07/24/02	04:05:30	89.013
07/24/02	04:06:30	89.156
07/24/02	04:07:30	89.099
07/24/02	04:08:30	89.013
07/24/02	04:09:30	89.013
07/24/02	04:10:30	87.051
07/24/02	04:11:30	87.279
07/24/02	04:12:30	87.051
07/24/02	04:13:30	86.340
07/24/02	04:14:30	86.653
07/24/02	04:15:30	86.795
07/24/02	04:16:30	86.880
07/24/02	04:17:30	86.255
07/24/02	04:18:30	87.108
07/24/02	04:19:30	87.108
07/24/02	04:20:30	85.146
07/24/02	04:21:30	87.279
07/24/02	04:22:30	87.051
07/24/02	04:23:30	87.108
07/24/02	04:24:30	86.966
07/24/02	04:25:30	86.880
07/24/02	04:26:30	86.966
07/24/02	04:27:30	86.880
07/24/02	04:28:30	87.591
07/24/02	04:29:30	87.193
07/24/02	04:30:30	86.255
07/24/02	04:31:30	88.445
07/24/02	04:32:30	88.701
07/24/02	04:33:30	89.639
07/24/02	04:34:30	89.724
07/24/02	04:35:30	91.146
07/24/02	04:36:30	90.976
07/24/02	04:37:30	91.203
07/24/02	04:38:30	91.288
07/24/02	04:39:30	90.890
07/24/02	04:40:30	89.952
07/24/02	04:41:30	90.492
07/24/02	04:42:30	90.179
07/24/02	04:43:30	90.435
07/24/02	04:44:30	90.037
07/24/02	04:45:30	90.350
07/24/02	04:46:30	90.265
07/24/02	04:47:30	90.350
07/24/02	04:48:30	90.037
07/24/02	04:49:30	90.350
07/24/02	04:50:30	90.577
07/24/02	04:51:30	91.288
07/24/02	04:52:30	91.516
07/24/02	04:53:30	91.857
07/24/02	04:54:30	91.772
07/24/02	04:55:30	91.601
07/24/02	04:56:30	91.857
07/24/02	04:57:30	91.687
07/24/02	04:58:30	91.687
07/24/02	04:59:30	91.687
07/24/02	05:00:30	89.099

SOUTHBOUND ACCESS ROAD OF IH35 - NO. 7492 cont.

Date	Time	Pres (PSI)
07/24/02	05:01:30	91.203
07/24/02	05:02:30	90.976
07/24/02	05:03:30	90.492
07/24/02	05:04:30	90.833
07/24/02	05:05:30	90.748
07/24/02	05:06:30	90.663
07/24/02	05:07:30	90.748
07/24/02	05:08:30	90.663
07/24/02	05:09:30	90.350
07/24/02	05:10:30	91.288
07/24/02	05:11:30	90.890
07/24/02	05:12:30	89.099
07/24/02	05:13:30	90.122
07/24/02	05:14:30	89.639
07/24/02	05:15:30	89.639
07/24/02	05:16:30	89.639
07/24/02	05:17:30	88.445
07/24/02	05:18:30	89.411
07/24/02	05:19:30	89.241
07/24/02	05:20:30	89.866
07/24/02	05:21:30	89.468
07/24/02	05:22:30	88.786
07/24/02	05:23:30	89.952
07/24/02	05:24:30	90.435
07/24/02	05:25:30	90.577
07/24/02	05:26:30	90.748
07/24/02	05:27:30	89.241
07/24/02	05:28:30	90.179
07/24/02	05:29:30	90.122
07/24/02	05:30:30	88.786
07/24/02	05:31:30	89.468
07/24/02	05:32:30	88.843
07/24/02	05:33:30	90.976
07/24/02	05:34:30	91.146
07/24/02	05:35:30	91.203
07/24/02	05:36:30	91.061
07/24/02	05:37:30	90.976
07/24/02	05:38:30	91.374
07/24/02	05:39:30	91.203
07/24/02	05:40:30	92.170
07/24/02	05:41:30	93.023
07/24/02	05:42:30	93.649
07/24/02	05:43:30	93.649
07/24/02	05:44:30	93.905
07/24/02	05:45:30	93.905
07/24/02	05:46:30	93.962
07/24/02	05:47:30	94.530
07/24/02	05:48:30	94.360
07/24/02	05:49:30	93.734
07/24/02	05:50:30	94.530
07/24/02	05:51:30	94.218
07/24/02	05:52:30	94.843
07/24/02	05:53:30	94.929
07/24/02	05:54:30	95.241
07/24/02	05:55:30	94.758
07/24/02	05:56:30	95.071
07/24/02	05:57:30	93.819
07/24/02	05:58:30	94.274
07/24/02	05:59:30	94.445
07/24/02	06:00:30	94.843
07/24/02	06:01:30	94.047
07/24/02	06:02:30	93.023
07/24/02	06:03:30	94.218
07/24/02	06:04:30	93.962
07/24/02	06:05:30	93.962
07/24/02	06:06:30	93.905
07/24/02	06:07:30	93.734
07/24/02	06:08:30	94.445
07/24/02	06:09:30	94.843
07/24/02	06:10:30	94.985
07/24/02	06:11:30	94.758
07/24/02	06:12:30	93.592
07/24/02	06:13:30	94.360
07/24/02	06:14:30	93.649
07/24/02	06:15:30	93.819
07/24/02	06:16:30	93.819
07/24/02	06:17:30	93.592
07/24/02	06:18:30	94.985
07/24/02	06:19:30	95.782
07/24/02	06:20:30	95.782
07/24/02	06:21:30	96.009
07/24/02	06:22:30	95.952
07/24/02	06:23:30	95.696
07/24/02	06:24:30	95.469
07/24/02	06:25:30	95.782
07/24/02	06:26:30	96.095
07/24/02	06:27:30	95.952
07/24/02	06:28:30	95.696
07/24/02	06:29:30	95.782
07/24/02	06:30:30	95.696
07/24/02	06:31:30	95.696
07/24/02	06:32:30	95.782
07/24/02	06:33:30	95.696
07/24/02	06:34:30	95.640
07/24/02	06:35:30	95.952
07/24/02	06:36:30	95.640
07/24/02	06:37:30	95.696
07/24/02	06:38:30	95.696
07/24/02	06:39:30	95.469
07/24/02	06:40:30	95.469
07/24/02	06:41:30	95.867
07/24/02	06:42:30	95.469
07/24/02	06:43:30	95.384
07/24/02	06:44:30	95.384
07/24/02	06:45:30	95.071
07/24/02	06:46:30	95.241
07/24/02	06:47:30	95.384
07/24/02	06:48:30	95.384
07/24/02	06:49:30	95.156
07/24/02	06:50:30	95.384
07/24/02	06:51:30	95.640
07/24/02	06:52:30	95.469
07/24/02	06:53:30	95.640
07/24/02	06:54:30	95.469
07/24/02	06:55:30	95.384
07/24/02	06:56:30	95.469
07/24/02	06:57:30	95.241
07/24/02	06:58:30	94.758
07/24/02	06:59:30	95.156
07/24/02	07:00:30	94.985
07/24/02	07:01:30	95.384
07/24/02	07:02:30	95.384
07/24/02	07:03:30	95.156
07/24/02	07:04:30	95.071
07/24/02	07:05:30	95.241
07/24/02	07:06:30	95.469
07/24/02	07:07:30	94.616
07/24/02	07:08:30	94.985
07/24/02	07:09:30	95.241
07/24/02	07:10:30	95.298
07/24/02	07:11:30	95.298
07/24/02	07:12:30	94.758
07/24/02	07:13:30	95.071
07/24/02	07:14:30	95.156
07/24/02	07:15:30	94.985
07/24/02	07:16:30	94.985
07/24/02	07:17:30	94.758
07/24/02	07:18:30	94.929
07/24/02	07:19:30	94.985
07/24/02	07:20:30	94.929
07/24/02	07:21:30	94.985
07/24/02	07:22:30	95.554
07/24/02	07:23:30	95.554
07/24/02	07:24:30	95.696
07/24/02	07:25:30	95.640
07/24/02	07:26:30	95.696
07/24/02	07:27:30	95.384
07/24/02	07:28:30	95.298
07/24/02	07:29:30	95.469
07/24/02	07:30:30	95.241
07/24/02	07:31:30	95.156
07/24/02	07:32:30	94.673
07/24/02	07:33:30	94.445
07/24/02	07:34:30	94.758
07/24/02	07:35:30	95.384
07/24/02	07:36:30	95.241
07/24/02	07:37:30	94.673
07/24/02	07:38:30	94.929
07/24/02	07:39:30	94.274
07/24/02	07:40:30	94.673
07/24/02	07:41:30	94.929
07/24/02	07:42:30	95.156
07/24/02	07:43:30	94.530
07/24/02	07:44:30	94.929
07/24/02	07:45:30	95.298
07/24/02	07:46:30	94.843
07/24/02	07:47:30	95.241
07/24/02	07:48:30	94.985
07/24/02	07:49:30	94.673
07/24/02	07:50:30	94.758
07/24/02	07:51:30	94.758
07/24/02	07:52:30	94.445
07/24/02	07:53:30	94.445
07/24/02	07:54:30	94.218
07/24/02	07:55:30	94.530
07/24/02	07:56:30	94.445
07/24/02	07:57:30	94.218
07/24/02	07:58:30	94.445
07/24/02	07:59:30	94.616
07/24/02	08:00:30	93.962
07/24/02	08:01:30	94.274
07/24/02	08:02:30	94.274
07/24/02	08:03:30	94.445
07/24/02	08:04:30	94.360
07/24/02	08:05:30	94.758
07/24/02	08:06:30	94.360
07/24/02	08:07:30	94.360
07/24/02	08:08:30	93.905
07/24/02	08:09:30	93.819
07/24/02	08:10:30	93.819
07/24/02	08:11:30	94.274
07/24/02	08:12:30	93.734
07/24/02	08:13:30	94.047
07/24/02	08:14:30	93.421
07/24/02	08:15:30	93.421
07/24/02	08:16:30	94.047
07/24/02	08:17:30	93.109
07/24/02	08:18:30	93.194
07/24/02	08:19:30	93.592
07/24/02	08:20:30	92.796
07/24/02	08:21:30	92.938
07/24/02	08:22:30	93.251
07/24/02	08:23:30	93.649
07/24/02	08:24:30	93.336
07/24/02	08:25:30	93.023
07/24/02	08:26:30	93.023
07/24/02	08:27:30	93.336
07/24/02	08:28:30	93.109
07/24/02	08:29:30	93.109
07/24/02	08:30:30	93.109
07/24/02	08:31:30	92.881
07/24/02	08:32:30	93.023
07/24/02	08:33:30	91.601
07/24/02	08:34:30	92.796
07/24/02	08:35:30	93.421
07/24/02	08:36:30	92.938
07/24/02	08:37:30	92.483
07/24/02	08:38:30	93.592
07/24/02	08:39:30	92.398
07/24/02	08:40:30	92.881
07/24/02	08:41:30	92.881
07/24/02	08:42:30	92.540
07/24/02	08:43:30	92.398
07/24/02	08:44:30	92.710
07/24/02	08:45:30	93.251
07/24/02	08:46:30	92.710
07/24/02	08:47:30	92.312
07/24/02	08:48:30	91.516
07/24/02	08:49:30	92.398
07/24/02	08:50:30	92.710
07/24/02	08:51:30	92.625
07/24/02	08:52:30	92.483
07/24/02	08:53:30	92.938
07/24/02	08:54:30	92.796
07/24/02	08:55:30	93.023
07/24/02	08:56:30	92.625
07/24/02	08:57:30	92.227
07/24/02	08:58:30	93.336
07/24/02	08:59:30	92.881
07/24/02	09:00:30	93.023
07/24/02	09:01:30	93.194
07/24/02	09:02:30	93.023
07/24/02	09:03:30	93.507
07/24/02	09:04:30	93.023
07/24/02	09:05:30	92.881
07/24/02	09:06:30	91.999
07/24/02	09:07:30	92.796
07/24/02	09:08:30	92.312
07/24/02	09:09:30	92.483
07/24/02	09:10:30	92.881
07/24/02	09:11:30	92.938
07/24/02	09:12:30	92.540
07/24/02	09:13:30	92.227
07/24/02	09:14:30	92.398
07/24/02	09:15:30	92.312
07/24/02	09:16:30	92.938
07/24/02	09:17:30	92.085
07/24/02	09:18:30	92.483
07/24/02	09:19:30	91.999
07/24/02	09:20:30	92.312
07/24/02	09:21:30	92.170
07/24/02	09:22:30	92.170
07/24/02	09:23:30	91.374
07/24/02	09:24:30	91.601

SOUTHBOUND ACCESS ROAD OF IH35 - NO. 7492 cont.

Date	Time	Pres (PSI)
07/24/02	09:25:30	92.483
07/24/02	09:26:30	92.085
07/24/02	09:27:30	91.459
07/24/02	09:28:30	91.914
07/24/02	09:29:30	92.398
07/24/02	09:30:30	92.312
07/24/02	09:31:30	92.398
07/24/02	09:32:30	91.999
07/24/02	09:33:30	91.999
07/24/02	09:34:30	91.687
07/24/02	09:35:30	91.459
07/24/02	09:36:30	91.687
07/24/02	09:37:30	91.516
07/24/02	09:38:30	91.857
07/24/02	09:39:30	91.914
07/24/02	09:40:30	91.772
07/24/02	09:41:30	92.227
07/24/02	09:42:30	91.687
07/24/02	09:43:30	92.170
07/24/02	09:44:30	91.999
07/24/02	09:45:30	90.265
07/24/02	09:46:30	90.663
07/24/02	09:47:30	91.857
07/24/02	09:48:30	92.710
07/24/02	09:49:30	93.421
07/24/02	09:50:30	92.227
07/24/02	09:51:30	92.227
07/24/02	09:52:30	92.227
07/24/02	09:53:30	91.772
07/24/02	09:54:30	92.938
07/24/02	09:55:30	92.625
07/24/02	09:56:30	93.649
07/24/02	09:57:30	92.312
07/24/02	09:58:30	93.592
07/24/02	09:59:30	92.312
07/24/02	10:00:30	93.023
07/24/02	10:01:30	93.819
07/24/02	10:02:30	92.398
07/24/02	10:03:30	93.421
07/24/02	10:04:30	93.734
07/24/02	10:05:30	93.507
07/24/02	10:06:30	93.421
07/24/02	10:07:30	93.962
07/24/02	10:08:30	93.962
07/24/02	10:09:30	94.218
07/24/02	10:10:30	94.616
07/24/02	10:11:30	94.843
07/24/02	10:12:30	94.218
07/24/02	10:13:30	94.274
07/24/02	10:14:30	93.649
07/24/02	10:15:30	93.336
07/24/02	10:16:30	94.530
07/24/02	10:17:30	94.360
07/24/02	10:18:30	93.649
07/24/02	10:19:30	94.843
07/24/02	10:20:30	95.469
07/24/02	10:21:30	95.071
07/24/02	10:22:30	95.696
07/24/02	10:23:30	95.867
07/24/02	10:24:30	94.929
07/24/02	10:25:30	94.360
07/24/02	10:26:30	94.530
07/24/02	10:27:30	95.867
07/24/02	10:28:30	95.156
07/24/02	10:29:30	94.274
07/24/02	10:30:30	93.507
07/24/02	10:31:30	94.616
07/24/02	10:32:30	94.616
07/24/02	10:33:30	94.929
07/24/02	10:34:30	95.469
07/24/02	10:35:30	94.758
07/24/02	10:36:30	95.554
07/24/02	10:37:30	95.554
07/24/02	10:38:30	95.298
07/24/02	10:39:30	95.384
07/24/02	10:40:30	93.023
07/24/02	10:41:30	94.047
07/24/02	10:42:30	82.160
07/24/02	10:43:30	93.649
07/24/02	10:44:30	90.976
07/24/02	10:45:30	89.326
07/24/02	10:46:30	90.122
07/24/02	10:47:30	88.701
07/24/02	10:48:30	89.724
07/24/02	10:49:30	90.179
07/24/02	10:50:30	90.265
07/24/02	10:51:30	88.786
07/24/02	10:52:30	88.530
07/24/02	10:53:30	89.554
07/24/02	10:54:30	89.241
07/24/02	10:55:30	88.843
07/24/02	10:56:30	88.701
07/24/02	10:57:30	88.701
07/24/02	10:58:30	89.156
07/24/02	10:59:30	87.591
07/24/02	11:00:30	87.506
07/24/02	11:01:30	87.762
07/24/02	11:02:30	88.615
07/24/02	11:03:30	87.279
07/24/02	11:04:30	91.203
07/24/02	11:05:30	90.037
07/24/02	11:06:30	90.976
07/24/02	11:07:30	90.890
07/24/02	11:08:30	90.976
07/24/02	11:09:30	89.099
07/24/02	11:10:30	91.146
07/24/02	11:11:30	90.350
07/24/02	11:12:30	89.554
07/24/02	11:13:30	90.265
07/24/02	11:14:30	89.724
07/24/02	11:15:30	90.833
07/24/02	11:16:30	91.459
07/24/02	11:17:30	90.179
07/24/02	11:18:30	89.468
07/24/02	11:19:30	89.952
07/24/02	11:20:30	90.179
07/24/02	11:21:30	89.724
07/24/02	11:22:30	90.265
07/24/02	11:23:30	89.866
07/24/02	11:24:30	90.122
07/24/02	11:25:30	90.122
07/24/02	11:26:30	91.772
07/24/02	11:27:30	90.122
07/24/02	11:28:30	90.037
07/24/02	11:29:30	90.122
07/24/02	11:30:30	89.554
07/24/02	11:31:30	91.516
07/24/02	11:32:30	91.203
07/24/02	11:33:30	90.122
07/24/02	11:34:30	90.890
07/24/02	11:35:30	90.577
07/24/02	11:36:30	89.411
07/24/02	11:37:30	90.179
07/24/02	11:38:30	90.492
07/24/02	11:39:30	91.601
07/24/02	11:40:30	91.288
07/24/02	11:41:30	-1.251
07/24/02	11:42:30	-1.166
07/24/02	11:43:30	-1.251
07/24/02	11:44:30	-1.166
07/24/02	11:45:30	-1.166
07/24/02	11:46:30	-1.166
07/24/02	11:47:30	-1.166
07/24/02	11:48:30	-1.081
07/24/02	11:49:30	-1.081
07/24/02	11:50:30	-1.081
07/24/02	11:51:30	-1.081
07/24/02	11:52:30	-1.081
07/24/02	11:53:30	-1.081
07/24/02	11:54:30	-1.024
07/24/02	11:55:30	-1.024
07/24/02	11:56:30	-1.081
07/24/02	11:57:30	-1.024
07/24/02	11:58:30	-1.024
07/24/02	11:59:30	-1.024
07/24/02	12:00:30	-0.938
07/24/02	12:01:30	-1.024
07/24/02	12:02:30	-1.024
07/24/02	12:03:30	-1.024
07/24/02	12:04:30	-1.024
07/24/02	12:05:30	-0.938
07/24/02	12:06:30	-0.938
07/24/02	12:07:30	-0.938
07/24/02	12:08:30	-0.938
07/24/02	12:09:30	-0.938
07/24/02	12:10:30	-0.938
07/24/02	12:11:30	-0.938
07/24/02	12:12:30	-0.938
07/24/02	12:13:30	-0.938
07/24/02	12:14:30	-0.938
07/24/02	12:15:30	-0.938
07/24/02	12:16:30	-0.938
07/24/02	12:17:30	-0.938
07/24/02	12:18:30	-0.938
07/24/02	12:19:30	-0.938
07/24/02	12:20:30	-0.938
07/24/02	12:21:30	-0.938
07/24/02	12:22:30	-0.938
07/24/02	12:23:30	-0.938
07/24/02	12:24:30	-0.938
07/24/02	12:25:30	-0.938
07/24/02	12:26:30	-0.938
07/24/02	12:27:30	-0.938
07/24/02	12:28:30	-0.938
07/24/02	12:29:30	-0.938
07/24/02	12:30:30	-0.938
07/24/02	12:31:30	-0.938
07/24/02	12:32:30	-0.938
07/24/02	12:33:30	-0.938
07/24/02	12:34:30	-0.938
07/24/02	12:35:30	-0.853
07/24/02	12:36:30	-0.938
07/24/02	12:37:30	-0.853
07/24/02	12:38:30	-0.853
07/24/02	12:39:30	-0.853
07/24/02	12:40:30	-0.853
07/24/02	12:41:30	-0.853
07/24/02	12:42:30	-0.853
07/24/02	12:43:30	-0.853
07/24/02	12:44:30	-0.853
07/24/02	12:45:30	-0.768
07/24/02	12:46:30	-0.853
07/24/02	12:47:30	-0.853
07/24/02	12:48:30	-0.853
07/24/02	12:49:30	-0.853
07/24/02	12:50:30	-0.853
07/24/02	12:51:30	-0.853
07/24/02	12:52:30	-0.853
07/24/02	12:53:30	-0.853
07/24/02	12:54:30	-0.853
07/24/02	12:55:30	-0.853
07/24/02	12:56:30	-0.768
07/24/02	12:57:30	-0.853
07/24/02	12:58:30	-0.768
07/24/02	12:59:30	-0.768
07/24/02	13:00:30	-0.768
07/24/02	13:01:30	-0.768
07/24/02	13:02:30	-0.768
07/24/02	13:03:30	-0.768
07/24/02	13:04:30	-0.768
07/24/02	13:05:30	-0.768
07/24/02	13:06:30	-0.853
07/24/02	13:07:30	-0.768
07/24/02	13:08:30	-0.768
07/24/02	13:09:30	-0.768
07/24/02	13:10:30	-0.768
07/24/02	13:11:30	-0.853
07/24/02	13:12:30	-0.853
07/24/02	13:13:30	-0.853
07/24/02	13:14:30	-0.853
07/24/02	13:15:30	-0.853
07/24/02	13:16:30	-0.768
07/24/02	13:17:30	-0.768
07/24/02	13:18:30	-0.853
07/24/02	13:19:30	-0.853
07/24/02	13:20:30	-0.768
07/24/02	13:21:30	-0.853
07/24/02	13:22:30	-0.853
07/24/02	13:23:30	-0.853
07/24/02	13:24:30	-0.853
07/24/02	13:25:30	-0.768
07/24/02	13:26:30	-0.768
07/24/02	13:27:30	-0.768
07/24/02	13:28:30	-0.768
07/24/02	13:29:30	-0.768
07/24/02	13:30:30	-0.768
07/24/02	13:31:30	-0.768
07/24/02	13:32:30	-0.768
07/24/02	13:33:30	-0.768
07/24/02	13:34:30	-0.768
07/24/02	13:35:30	-0.768
07/24/02	13:36:30	-0.768
07/24/02	13:37:30	-0.768
07/24/02	13:38:30	-0.768
07/24/02	13:39:30	-0.768
07/24/02	13:40:30	-0.768
07/24/02	13:41:30	-0.768
07/24/02	13:42:30	-0.768
07/24/02	13:43:30	-0.768
07/24/02	13:44:30	-0.768
07/24/02	13:45:30	-0.768
07/24/02	13:46:30	-0.768
07/24/02	13:47:30	-0.768

SOUTHBOUND ACCESS ROAD OF IH35 - NO. 7492 cont.

Date	Time	Pres (PSI)
07/24/02	13:48:30	-0.768
07/24/02	13:49:30	-0.683
07/24/02	13:50:30	-0.683
07/24/02	13:51:30	-0.683
07/24/02	13:52:30	-0.683
07/24/02	13:53:30	-0.683
07/24/02	13:54:30	-0.768
07/24/02	13:55:30	-0.683
07/24/02	13:56:30	-0.683
07/24/02	13:57:30	-0.683
07/24/02	13:58:30	-0.768
07/24/02	13:59:30	-0.683
07/24/02	14:00:30	-0.683
07/24/02	14:01:30	-0.768
07/24/02	14:02:30	-0.683
07/24/02	14:03:30	-0.683
07/24/02	14:04:30	-0.768
07/24/02	14:05:30	-0.768
07/24/02	14:06:30	-0.768
07/24/02	14:07:30	-0.683
07/24/02	14:08:30	-0.683
07/24/02	14:09:30	-0.683
07/24/02	14:10:30	-0.683
07/24/02	14:11:30	-0.768
07/24/02	14:12:30	-0.768
07/24/02	14:13:30	-0.768
07/24/02	14:14:30	-0.683
07/24/02	14:15:30	-0.683
07/24/02	14:16:30	-0.683
07/24/02	14:17:30	-0.683
07/24/02	14:18:30	-0.683
07/24/02	14:19:30	-0.768
07/24/02	14:20:30	-0.683
07/24/02	14:21:30	-0.683
07/24/02	14:22:30	-0.683
07/24/02	14:23:30	-0.683
07/24/02	14:24:30	-0.626
07/24/02	14:25:30	-0.683
07/24/02	14:26:30	-0.683
07/24/02	14:27:30	-0.683
07/24/02	14:28:30	-0.683
07/24/02	14:29:30	-0.683
07/24/02	14:30:30	-0.683
07/24/02	14:31:30	-0.768
07/24/02	14:32:30	-0.768
07/24/02	14:33:30	-0.768
07/24/02	14:34:30	-0.768
07/24/02	14:35:30	-0.768
07/24/02	14:36:30	-0.683
07/24/02	14:37:30	-0.768
07/24/02	14:38:30	-0.768
07/24/02	14:39:30	-0.768
07/24/02	14:40:30	-0.768
07/24/02	14:41:30	-0.768
07/24/02	14:42:30	-0.768
07/24/02	14:43:30	-0.768
07/24/02	14:44:30	-0.768
07/24/02	14:45:30	-0.768
07/24/02	14:46:30	-0.768
07/24/02	14:47:30	-0.768
07/24/02	14:48:30	-0.768
07/24/02	14:49:30	-0.683
07/24/02	14:50:30	-0.853
07/24/02	14:51:30	-0.853
07/24/02	14:52:30	-0.853
07/24/02	14:53:30	-0.768
07/24/02	14:54:30	-0.768
07/24/02	14:55:30	-0.768
07/24/02	14:56:30	-0.768
07/24/02	14:57:30	-0.768
07/24/02	14:58:30	-0.768
07/24/02	14:59:30	-0.768
07/24/02	15:00:30	-0.853
07/24/02	15:01:30	-0.768
07/24/02	15:02:30	-0.683
07/24/02	15:03:30	-0.683
07/24/02	15:04:30	-0.683
07/24/02	15:05:30	-0.768
07/24/02	15:06:30	-0.768
07/24/02	15:07:30	-0.768
07/24/02	15:08:30	-0.683
07/24/02	15:09:30	-0.683
07/24/02	15:10:30	-0.683
07/24/02	15:11:30	-0.683
07/24/02	15:12:30	-0.683
07/24/02	15:13:30	-0.683
07/24/02	15:14:30	-0.683
07/24/02	15:15:30	-0.768
07/24/02	15:16:30	-0.683
07/24/02	15:17:30	-0.683
07/24/02	15:18:30	-0.768
07/24/02	15:19:30	-0.768
07/24/02	15:20:30	-0.683
07/24/02	15:21:30	-0.683
07/24/02	15:22:30	-0.683
07/24/02	15:23:30	-0.768
07/24/02	15:24:30	-0.768
07/24/02	15:25:30	-0.768
07/24/02	15:26:30	-0.768
07/24/02	15:27:30	-0.768
07/24/02	15:28:30	-0.768
07/24/02	15:29:30	-0.768
07/24/02	15:30:30	-0.768
07/24/02	15:31:30	-0.768
07/24/02	15:32:30	-0.768
07/24/02	15:33:30	-0.768
07/24/02	15:34:30	-0.768
07/24/02	15:35:30	-0.768
07/24/02	15:36:30	-0.768
07/24/02	15:37:30	-0.768
07/24/02	15:38:30	-0.768
07/24/02	15:39:30	-0.768
07/24/02	15:40:30	-0.853
07/24/02	15:41:30	-0.853
07/24/02	15:42:30	-0.768
07/24/02	15:43:30	-0.768
07/24/02	15:44:30	-0.768
07/24/02	15:45:30	-0.853
07/24/02	15:46:30	-0.853
07/24/02	15:47:30	-0.853
07/24/02	15:48:30	-0.853
07/24/02	15:49:30	-0.853
07/24/02	15:50:30	-0.853
07/24/02	15:51:30	-0.853
07/24/02	15:52:30	-0.853
07/24/02	15:53:30	-0.853
07/24/02	15:54:30	-0.853
07/24/02	15:55:30	-0.853
07/24/02	15:56:30	-0.853
07/24/02	15:57:30	-0.853
07/24/02	15:58:30	-0.853
07/24/02	15:59:30	-0.853
07/24/02	16:00:30	-0.853
07/24/02	16:01:30	-0.853
07/24/02	16:02:30	-0.853
07/24/02	16:03:30	-0.853
07/24/02	16:04:30	-0.853

SCHULE AND CAMARO WAY - NO. 7288

Date	Time	Pres (PSI)	Date	Time	Pres (PSI)	Date	Time	Pres (PSI)	Date	Time	Pres (PSI)
07/22/02	09:03:05	1.166	07/22/02	10:09:05	73.258	07/22/02	11:15:05	66.604	07/22/02	12:21:05	66.205
07/22/02	09:04:05	1.166	07/22/02	10:10:05	73.315	07/22/02	11:16:05	66.604	07/22/02	12:22:05	64.357
07/22/02	09:05:05	1.223	07/22/02	10:11:05	73.002	07/22/02	11:17:05	67.201	07/22/02	12:23:05	66.774
07/22/02	09:06:05	1.166	07/22/02	10:12:05	72.889	07/22/02	11:18:05	66.063	07/22/02	12:24:05	64.471
07/22/02	09:07:05	1.166	07/22/02	10:13:05	73.258	07/22/02	11:19:05	66.831	07/22/02	12:25:05	65.494
07/22/02	09:08:05	1.166	07/22/02	10:14:05	72.945	07/22/02	11:20:05	65.068	07/22/02	12:26:05	65.011
07/22/02	09:09:05	1.109	07/22/02	10:15:05	73.315	07/22/02	11:21:05	67.258	07/22/02	12:27:05	64.528
07/22/02	09:10:05	1.166	07/22/02	10:16:05	73.656	07/22/02	11:22:05	66.319	07/22/02	12:28:05	66.063
07/22/02	09:11:05	1.166	07/22/02	10:17:05	72.889	07/22/02	11:23:05	67.144	07/22/02	12:29:05	63.418
07/22/02	09:12:05	1.166	07/22/02	10:18:05	72.661	07/22/02	11:24:05	65.665	07/22/02	12:30:05	65.295
07/22/02	09:13:05	1.109	07/22/02	10:19:05	73.116	07/22/02	11:25:05	65.836	07/22/02	12:31:05	64.698
07/22/02	09:14:05	1.109	07/22/02	10:20:05	73.486	07/22/02	11:26:05	66.660	07/22/02	12:32:05	65.836
07/22/02	09:15:05	1.109	07/22/02	10:21:05	72.889	07/22/02	11:27:05	65.779	07/22/02	12:33:05	64.698
07/22/02	09:16:05	1.109	07/22/02	10:22:05	73.600	07/22/02	11:28:05	65.893	07/22/02	12:34:05	66.262
07/22/02	09:17:05	1.109	07/22/02	10:23:05	72.832	07/22/02	11:29:05	66.547	07/22/02	12:35:05	64.897
07/22/02	09:18:05	1.166	07/22/02	10:24:05	73.315	07/22/02	11:30:05	66.774	07/22/02	12:36:05	65.722
07/22/02	09:19:05	1.109	07/22/02	10:25:05	73.486	07/22/02	11:31:05	65.494	07/22/02	12:37:05	65.295
07/22/02	09:20:05	1.109	07/22/02	10:26:05	72.661	07/22/02	11:32:05	66.262	07/22/02	12:38:05	65.125
07/22/02	09:21:05	1.052	07/22/02	10:27:05	73.372	07/22/02	11:33:05	65.182	07/22/02	12:39:05	64.186
07/22/02	09:22:05	1.109	07/22/02	10:28:05	72.291	07/22/02	11:34:05	65.949	07/22/02	12:40:05	65.409
07/22/02	09:23:05	1.052	07/22/02	10:29:05	72.661	07/22/02	11:35:05	66.433	07/22/02	12:41:05	65.182
07/22/02	09:24:05	1.109	07/22/02	10:30:05	73.315	07/22/02	11:36:05	65.352	07/22/02	12:42:05	65.779
07/22/02	09:25:05	1.109	07/22/02	10:31:05	73.002	07/22/02	11:37:05	67.258	07/22/02	12:43:05	65.011
07/22/02	09:26:05	1.109	07/22/02	10:32:05	73.315	07/22/02	11:38:05	65.182	07/22/02	12:44:05	64.186
07/22/02	09:27:05	1.052	07/22/02	10:33:05	73.059	07/22/02	11:39:05	65.779	07/22/02	12:45:05	64.471
07/22/02	09:28:05	1.052	07/22/02	10:34:05	73.372	07/22/02	11:40:05	66.604	07/22/02	12:46:05	65.836
07/22/02	09:29:05	1.052	07/22/02	10:35:05	73.656	07/22/02	11:41:05	66.319	07/22/02	12:47:05	64.641
07/22/02	09:30:05	1.052	07/22/02	10:36:05	73.315	07/22/02	11:42:05	65.665	07/22/02	12:48:05	64.414
07/22/02	09:31:05	1.052	07/22/02	10:37:05	73.372	07/22/02	11:43:05	66.063	07/22/02	12:49:05	64.584
07/22/02	09:32:05	1.052	07/22/02	10:38:05	72.832	07/22/02	11:44:05	66.433	07/22/02	12:50:05	65.011
07/22/02	09:33:05	72.462	07/22/02	10:39:05	72.889	07/22/02	11:45:05	65.949	07/22/02	12:51:05	64.471
07/22/02	09:34:05	72.775	07/22/02	10:40:05	72.945	07/22/02	11:46:05	65.409	07/22/02	12:52:05	65.068
07/22/02	09:35:05	72.547	07/22/02	10:41:05	72.945	07/22/02	11:47:05	66.262	07/22/02	12:53:05	64.528
07/22/02	09:36:05	71.523	07/22/02	10:42:05	72.348	07/22/02	11:48:05	65.068	07/22/02	12:54:05	65.182
07/22/02	09:37:05	72.462	07/22/02	10:43:05	72.775	07/22/02	11:49:05	65.722	07/22/02	12:55:05	65.239
07/22/02	09:38:05	72.178	07/22/02	10:44:05	72.291	07/22/02	11:50:05	65.409	07/22/02	12:56:05	64.641
07/22/02	09:39:05	72.547	07/22/02	10:45:05	72.178	07/22/02	11:51:05	66.006	07/22/02	12:57:05	66.006
07/22/02	09:40:05	73.315	07/22/02	10:46:05	72.348	07/22/02	11:52:05	65.352	07/22/02	12:58:05	64.840
07/22/02	09:41:05	72.775	07/22/02	10:47:05	72.661	07/22/02	11:53:05	66.490	07/22/02	12:59:05	65.295
07/22/02	09:42:05	74.083	07/22/02	10:48:05	72.348	07/22/02	11:54:05	66.831	07/22/02	13:00:05	65.182
07/22/02	09:43:05	73.002	07/22/02	10:49:05	72.178	07/22/02	11:55:05	64.897	07/22/02	13:01:05	65.068
07/22/02	09:44:05	73.429	07/22/02	10:50:05	72.775	07/22/02	11:56:05	66.973	07/22/02	13:02:05	65.551
07/22/02	09:45:05	73.059	07/22/02	10:51:05	72.832	07/22/02	11:57:05	65.665	07/22/02	13:03:05	64.300
07/22/02	09:46:05	73.059	07/22/02	10:52:05	72.405	07/22/02	11:58:05	65.608	07/22/02	13:04:05	65.409
07/22/02	09:47:05	73.543	07/22/02	10:53:05	72.547	07/22/02	11:59:05	65.722	07/22/02	13:05:05	64.897
07/22/02	09:48:05	72.945	07/22/02	10:54:05	44.450	07/22/02	12:00:05	66.774	07/22/02	13:06:05	65.494
07/22/02	09:49:05	73.116	07/22/02	10:55:05	76.017	07/22/02	12:01:05	64.357	07/22/02	13:07:05	64.186
07/22/02	09:50:05	72.775	07/22/02	10:56:05	64.584	07/22/02	12:02:05	66.433	07/22/02	13:08:05	64.528
07/22/02	09:51:05	74.254	07/22/02	10:57:05	65.779	07/22/02	12:03:05	64.755	07/22/02	13:09:05	64.129
07/22/02	09:52:05	73.173	07/22/02	10:58:05	68.736	07/22/02	12:04:05	65.295	07/22/02	13:10:05	65.836
07/22/02	09:53:05	73.173	07/22/02	10:59:05	65.893	07/22/02	12:05:05	64.840	07/22/02	13:11:05	63.873
07/22/02	09:54:05	73.173	07/22/02	11:00:05	67.030	07/22/02	12:06:05	66.006	07/22/02	13:12:05	64.954
07/22/02	09:55:05	74.424	07/22/02	11:01:05	66.831	07/22/02	12:07:05	65.125	07/22/02	13:13:05	64.698
07/22/02	09:56:05	73.429	07/22/02	11:02:05	66.205	07/22/02	12:08:05	65.722	07/22/02	13:14:05	65.068
07/22/02	09:57:05	73.258	07/22/02	11:03:05	66.262	07/22/02	12:09:05	65.295	07/22/02	13:15:05	63.930
07/22/02	09:58:05	73.884	07/22/02	11:04:05	67.428	07/22/02	12:10:05	65.239	07/22/02	13:16:05	64.300
07/22/02	09:59:05	73.656	07/22/02	11:05:05	66.063	07/22/02	12:11:05	65.551	07/22/02	13:17:05	65.352
07/22/02	10:00:05	73.486	07/22/02	11:06:05	67.684	07/22/02	12:12:05	65.125	07/22/02	13:18:05	64.044
07/22/02	10:01:05	73.315	07/22/02	11:07:05	67.371	07/22/02	12:13:05	65.665	07/22/02	13:19:05	63.646
07/22/02	10:02:05	72.661	07/22/02	11:08:05	65.893	07/22/02	12:14:05	65.182	07/22/02	13:20:05	63.930
07/22/02	10:03:05	73.372	07/22/02	11:09:05	66.319	07/22/02	12:15:05	65.836	07/22/02	13:21:05	65.182
07/22/02	10:04:05	72.889	07/22/02	11:10:05	67.144	07/22/02	12:16:05	65.409	07/22/02	13:22:05	64.641
07/22/02	10:05:05	72.661	07/22/02	11:11:05	66.319	07/22/02	12:17:05	65.239	07/22/02	13:23:05	64.641
07/22/02	10:06:05	73.372	07/22/02	11:12:05	65.722	07/22/02	12:18:05	66.205	07/22/02	13:24:05	64.584
07/22/02	10:07:05	73.059	07/22/02	11:13:05	66.433	07/22/02	12:19:05	65.068	07/22/02	13:25:05	64.129
07/22/02	10:08:05	73.116	07/22/02	11:14:05	67.258	07/22/02	12:20:05	65.608	07/22/02	13:26:05	64.357

SCHULE AND CAMARO WAY - NO. 7288 cont.

Date	Time	Pres (PSI)	Date	Time	Pres (PSI)	Date	Time	Pres (PSI)	Date	Time	Pres (PSI)
07/22/02	13:27:05	72.234	07/22/02	14:33:05	66.120	07/22/02	15:39:05	65.182	07/22/02	16:45:05	68.395
07/22/02	13:28:05	62.935	07/22/02	14:34:05	66.831	07/22/02	15:40:05	66.205	07/22/02	16:46:05	65.665
07/22/02	13:29:05	67.144	07/22/02	14:35:05	66.262	07/22/02	15:41:05	68.509	07/22/02	16:47:05	67.030
07/22/02	13:30:05	66.063	07/22/02	14:36:05	66.376	07/22/02	15:42:05	66.376	07/22/02	16:48:05	66.262
07/22/02	13:31:05	65.494	07/22/02	14:37:05	66.006	07/22/02	15:43:05	65.608	07/22/02	16:49:05	66.604
07/22/02	13:32:05	66.319	07/22/02	14:38:05	65.409	07/22/02	15:44:05	66.319	07/22/02	16:50:05	66.376
07/22/02	13:33:05	65.893	07/22/02	14:39:05	66.376	07/22/02	15:45:05	65.551	07/22/02	16:51:05	65.551
07/22/02	13:34:05	66.205	07/22/02	14:40:05	65.836	07/22/02	15:46:05	65.893	07/22/02	16:52:05	67.258
07/22/02	13:35:05	66.063	07/22/02	14:41:05	66.433	07/22/02	15:47:05	66.604	07/22/02	16:53:05	65.836
07/22/02	13:36:05	66.660	07/22/02	14:42:05	67.201	07/22/02	15:48:05	65.722	07/22/02	16:54:05	66.490
07/22/02	13:37:05	66.205	07/22/02	14:43:05	65.836	07/22/02	15:49:05	66.717	07/22/02	16:55:05	66.205
07/22/02	13:38:05	65.893	07/22/02	14:44:05	65.665	07/22/02	15:50:05	66.831	07/22/02	16:56:05	64.698
07/22/02	13:39:05	67.969	07/22/02	14:45:05	67.315	07/22/02	15:51:05	63.760	07/22/02	16:57:05	67.201
07/22/02	13:40:05	66.006	07/22/02	14:46:05	65.779	07/22/02	15:52:05	66.973	07/22/02	16:58:05	65.836
07/22/02	13:41:05	66.604	07/22/02	14:47:05	66.006	07/22/02	15:53:05	66.717	07/22/02	16:59:05	65.608
07/22/02	13:42:05	67.315	07/22/02	14:48:05	66.433	07/22/02	15:54:05	65.551	07/22/02	17:00:05	66.604
07/22/02	13:43:05	66.006	07/22/02	14:49:05	65.779	07/22/02	15:55:05	66.547	07/22/02	17:01:05	66.490
07/22/02	13:44:05	66.916	07/22/02	14:50:05	65.665	07/22/02	15:56:05	65.125	07/22/02	17:02:05	65.494
07/22/02	13:45:05	65.239	07/22/02	14:51:05	66.547	07/22/02	15:57:05	66.433	07/22/02	17:03:05	66.973
07/22/02	13:46:05	66.319	07/22/02	14:52:05	66.262	07/22/02	15:58:05	66.319	07/22/02	17:04:05	65.239
07/22/02	13:47:05	66.063	07/22/02	14:53:05	65.409	07/22/02	15:59:05	66.717	07/22/02	17:05:05	68.623
07/22/02	13:48:05	66.376	07/22/02	14:54:05	66.490	07/22/02	16:00:05	65.722	07/22/02	17:06:05	67.627
07/22/02	13:49:05	66.547	07/22/02	14:55:05	66.660	07/22/02	16:01:05	65.722	07/22/02	17:07:05	68.253
07/22/02	13:50:05	65.239	07/22/02	14:56:05	66.717	07/22/02	16:02:05	65.551	07/22/02	17:08:05	67.428
07/22/02	13:51:05	66.262	07/22/02	14:57:05	65.722	07/22/02	16:03:05	66.433	07/22/02	17:09:05	67.798
07/22/02	13:52:05	65.836	07/22/02	14:58:05	66.262	07/22/02	16:04:05	67.144	07/22/02	17:10:05	67.855
07/22/02	13:53:05	66.006	07/22/02	14:59:05	66.262	07/22/02	16:05:05	65.068	07/22/02	17:11:05	68.395
07/22/02	13:54:05	65.722	07/22/02	15:00:05	66.262	07/22/02	16:06:05	65.779	07/22/02	17:12:05	67.627
07/22/02	13:55:05	66.490	07/22/02	15:01:05	66.547	07/22/02	16:07:05	66.660	07/22/02	17:13:05	66.717
07/22/02	13:56:05	65.836	07/22/02	15:02:05	65.665	07/22/02	16:08:05	65.836	07/22/02	17:14:05	68.026
07/22/02	13:57:05	65.836	07/22/02	15:03:05	66.006	07/22/02	16:09:05	66.063	07/22/02	17:15:05	68.623
07/22/02	13:58:05	65.295	07/22/02	15:04:05	65.722	07/22/02	16:10:05	66.120	07/22/02	17:16:05	68.082
07/22/02	13:59:05	65.836	07/22/02	15:05:05	66.490	07/22/02	16:11:05	67.371	07/22/02	17:17:05	67.627
07/22/02	14:00:05	65.011	07/22/02	15:06:05	65.836	07/22/02	16:12:05	65.409	07/22/02	17:18:05	67.969
07/22/02	14:01:05	65.722	07/22/02	15:07:05	66.831	07/22/02	16:13:05	66.376	07/22/02	17:19:05	67.542
07/22/02	14:02:05	67.741	07/22/02	15:08:05	67.030	07/22/02	16:14:05	66.376	07/22/02	17:20:05	67.371
07/22/02	14:03:05	64.641	07/22/02	15:09:05	65.409	07/22/02	16:15:05	65.665	07/22/02	17:21:05	67.371
07/22/02	14:04:05	66.490	07/22/02	15:10:05	66.490	07/22/02	16:16:05	65.665	07/22/02	17:22:05	67.798
07/22/02	14:05:05	65.551	07/22/02	15:11:05	65.352	07/22/02	16:17:05	66.319	07/22/02	17:23:05	67.371
07/22/02	14:06:05	66.319	07/22/02	15:12:05	65.949	07/22/02	16:18:05	66.831	07/22/02	17:24:05	67.485
07/22/02	14:07:05	65.608	07/22/02	15:13:05	66.831	07/22/02	16:19:05	66.120	07/22/02	17:25:05	67.969
07/22/02	14:08:05	65.551	07/22/02	15:14:05	66.063	07/22/02	16:20:05	66.660	07/22/02	17:26:05	67.315
07/22/02	14:09:05	66.120	07/22/02	15:15:05	66.006	07/22/02	16:21:05	65.608	07/22/02	17:27:05	67.030
07/22/02	14:10:05	65.295	07/22/02	15:16:05	66.490	07/22/02	16:22:05	66.063	07/22/02	17:28:05	67.542
07/22/02	14:11:05	65.551	07/22/02	15:17:05	65.949	07/22/02	16:23:05	67.144	07/22/02	17:29:05	66.831
07/22/02	14:12:05	65.836	07/22/02	15:18:05	66.717	07/22/02	16:24:05	66.319	07/22/02	17:30:05	67.912
07/22/02	14:13:05	65.722	07/22/02	15:19:05	65.779	07/22/02	16:25:05	65.836	07/22/02	17:31:05	66.973
07/22/02	14:14:05	65.409	07/22/02	15:20:05	66.660	07/22/02	16:26:05	66.120	07/22/02	17:32:05	67.542
07/22/02	14:15:05	66.120	07/22/02	15:21:05	65.608	07/22/02	16:27:05	66.063	07/22/02	17:33:05	67.855
07/22/02	14:16:05	66.006	07/22/02	15:22:05	65.352	07/22/02	16:28:05	66.205	07/22/02	17:34:05	68.139
07/22/02	14:17:05	67.201	07/22/02	15:23:05	66.831	07/22/02	16:29:05	66.376	07/22/02	17:35:05	66.831
07/22/02	14:18:05	66.319	07/22/02	15:24:05	66.547	07/22/02	16:30:05	66.433	07/22/02	17:36:05	68.736
07/22/02	14:19:05	65.409	07/22/02	15:25:05	65.409	07/22/02	16:31:05	66.120	07/22/02	17:37:05	67.627
07/22/02	14:20:05	66.006	07/22/02	15:26:05	66.063	07/22/02	16:32:05	65.949	07/22/02	17:38:05	67.371
07/22/02	14:21:05	67.144	07/22/02	15:27:05	66.717	07/22/02	16:33:05	67.798	07/22/02	17:39:05	67.969
07/22/02	14:22:05	66.319	07/22/02	15:28:05	65.494	07/22/02	16:34:05	66.205	07/22/02	17:40:05	66.490
07/22/02	14:23:05	66.433	07/22/02	15:29:05	66.660	07/22/02	16:35:05	66.120	07/22/02	17:41:05	68.680
07/22/02	14:24:05	65.551	07/22/02	15:30:05	67.030	07/22/02	16:36:05	66.120	07/22/02	17:42:05	68.196
07/22/02	14:25:05	66.063	07/22/02	15:31:05	65.011	07/22/02	16:37:05	65.893	07/22/02	17:43:05	67.315
07/22/02	14:26:05	65.551	07/22/02	15:32:05	65.608	07/22/02	16:38:05	66.205	07/22/02	17:44:05	67.428
07/22/02	14:27:05	65.409	07/22/02	15:33:05	65.722	07/22/02	16:39:05	66.120	07/22/02	17:45:05	67.428
07/22/02	14:28:05	66.120	07/22/02	15:34:05	66.547	07/22/02	16:40:05	67.201	07/22/02	17:46:05	67.912
07/22/02	14:29:05	65.949	07/22/02	15:35:05	65.893	07/22/02	16:41:05	65.494	07/22/02	17:47:05	68.196
07/22/02	14:30:05	66.973	07/22/02	15:36:05	65.665	07/22/02	16:42:05	66.547	07/22/02	17:48:05	68.026
07/22/02	14:31:05	65.608	07/22/02	15:37:05	66.319	07/22/02	16:43:05	66.547	07/22/02	17:49:05	68.139
07/22/02	14:32:05	65.779	07/22/02	15:38:05	65.893	07/22/02	16:44:05	64.471	07/22/02	17:50:05	67.428

SCHULE AND CAMARO WAY - NO. 7288 cont.

Date	Time	Pres (PSI)
07/22/02	17:51:05	67.969
07/22/02	17:52:05	67.798
07/22/02	17:53:05	68.139
07/22/02	17:54:05	68.026
07/22/02	17:55:05	68.338
07/22/02	17:56:05	67.912
07/22/02	17:57:05	69.163
07/22/02	17:58:05	66.660
07/22/02	17:59:05	68.082
07/22/02	18:00:05	67.258
07/22/02	18:01:05	67.627
07/22/02	18:02:05	67.741
07/22/02	18:03:05	68.082
07/22/02	18:04:05	67.969
07/22/02	18:05:05	66.973
07/22/02	18:06:05	68.253
07/22/02	18:07:05	67.741
07/22/02	18:08:05	67.087
07/22/02	18:09:05	67.912
07/22/02	18:10:05	66.490
07/22/02	18:11:05	67.315
07/22/02	18:12:05	68.509
07/22/02	18:13:05	67.315
07/22/02	18:14:05	67.627
07/22/02	18:15:05	67.428
07/22/02	18:16:05	67.030
07/22/02	18:17:05	67.371
07/22/02	18:18:05	66.916
07/22/02	18:19:05	67.798
07/22/02	18:20:05	67.258
07/22/02	18:21:05	66.916
07/22/02	18:22:05	67.315
07/22/02	18:23:05	67.371
07/22/02	18:24:05	67.371
07/22/02	18:25:05	66.916
07/22/02	18:26:05	67.428
07/22/02	18:27:05	67.144
07/22/02	18:28:05	67.428
07/22/02	18:29:05	66.973
07/22/02	18:30:05	67.912
07/22/02	18:31:05	67.087
07/22/02	18:32:05	66.205
07/22/02	18:33:05	66.660
07/22/02	18:34:05	67.144
07/22/02	18:35:05	66.376
07/22/02	18:36:05	67.684
07/22/02	18:37:05	67.201
07/22/02	18:38:05	66.547
07/22/02	18:39:05	67.684
07/22/02	18:40:05	67.030
07/22/02	18:41:05	67.798
07/22/02	18:42:05	67.258
07/22/02	18:43:05	67.428
07/22/02	18:44:05	67.030
07/22/02	18:45:05	66.604
07/22/02	18:46:05	67.627
07/22/02	18:47:05	66.831
07/22/02	18:48:05	66.831
07/22/02	18:49:05	66.774
07/22/02	18:50:05	67.144
07/22/02	18:51:05	67.741
07/22/02	18:52:05	67.542
07/22/02	18:53:05	68.196
07/22/02	18:54:05	66.774
07/22/02	18:55:05	67.485
07/22/02	18:56:05	67.315
07/22/02	18:57:05	68.253
07/22/02	18:58:05	67.258
07/22/02	18:59:05	66.547
07/22/02	19:00:05	67.428
07/22/02	19:01:05	68.026
07/22/02	19:02:05	67.315
07/22/02	19:03:05	67.201
07/22/02	19:04:05	66.717
07/22/02	19:05:05	67.912
07/22/02	19:06:05	66.831
07/22/02	19:07:05	67.627
07/22/02	19:08:05	66.831
07/22/02	19:09:05	67.912
07/22/02	19:10:05	67.684
07/22/02	19:11:05	67.741
07/22/02	19:12:05	67.855
07/22/02	19:13:05	66.973
07/22/02	19:14:05	67.855
07/22/02	19:15:05	67.741
07/22/02	19:16:05	67.258
07/22/02	19:17:05	67.371
07/22/02	19:18:05	67.684
07/22/02	19:19:05	67.855
07/22/02	19:20:05	69.561
07/22/02	19:21:05	67.855
07/22/02	19:22:05	67.684
07/22/02	19:23:05	67.912
07/22/02	19:24:05	67.428
07/22/02	19:25:05	67.542
07/22/02	19:26:05	68.082
07/22/02	19:27:05	67.201
07/22/02	19:28:05	67.627
07/22/02	19:29:05	68.509
07/22/02	19:30:05	67.428
07/22/02	19:31:05	67.969
07/22/02	19:32:05	68.196
07/22/02	19:33:05	67.855
07/22/02	19:34:05	67.371
07/22/02	19:35:05	68.196
07/22/02	19:36:05	68.196
07/22/02	19:37:05	67.912
07/22/02	19:38:05	68.395
07/22/02	19:39:05	67.855
07/22/02	19:40:05	67.969
07/22/02	19:41:05	68.395
07/22/02	19:42:05	68.196
07/22/02	19:43:05	68.338
07/22/02	19:44:05	68.338
07/22/02	19:45:05	67.428
07/22/02	19:46:05	68.026
07/22/02	19:47:05	67.684
07/22/02	19:48:05	67.741
07/22/02	19:49:05	68.139
07/22/02	19:50:05	67.969
07/22/02	19:51:05	68.566
07/22/02	19:52:05	67.969
07/22/02	19:53:05	68.509
07/22/02	19:54:05	68.253
07/22/02	19:55:05	68.850
07/22/02	19:56:05	68.139
07/22/02	19:57:05	67.258
07/22/02	19:58:05	68.680
07/22/02	19:59:05	67.428
07/22/02	20:00:05	68.253
07/22/02	20:01:05	68.026
07/22/02	20:02:05	66.916
07/22/02	20:03:05	68.026
07/22/02	20:04:05	68.566
07/22/02	20:05:05	68.452
07/22/02	20:06:05	67.315
07/22/02	20:07:05	68.509
07/22/02	20:08:05	67.258
07/22/02	20:09:05	68.623
07/22/02	20:10:05	68.452
07/22/02	20:11:05	68.907
07/22/02	20:12:05	68.338
07/22/02	20:13:05	68.253
07/22/02	20:14:05	68.253
07/22/02	20:15:05	68.907
07/22/02	20:16:05	68.964
07/22/02	20:17:05	69.675
07/22/02	20:18:05	66.973
07/22/02	20:19:05	68.736
07/22/02	20:20:05	67.741
07/22/02	20:21:05	68.736
07/22/02	20:22:05	67.855
07/22/02	20:23:05	68.139
07/22/02	20:24:05	68.509
07/22/02	20:25:05	68.680
07/22/02	20:26:05	68.139
07/22/02	20:27:05	68.196
07/22/02	20:28:05	68.139
07/22/02	20:29:05	68.253
07/22/02	20:30:05	68.196
07/22/02	20:31:05	69.163
07/22/02	20:32:05	68.082
07/22/02	20:33:05	68.395
07/22/02	20:34:05	68.509
07/22/02	20:35:05	68.026
07/22/02	20:36:05	68.736
07/22/02	20:37:05	68.907
07/22/02	20:38:05	68.082
07/22/02	20:39:05	68.566
07/22/02	20:40:05	68.793
07/22/02	20:41:05	68.395
07/22/02	20:42:05	68.139
07/22/02	20:43:05	68.680
07/22/02	20:44:05	68.253
07/22/02	20:45:05	68.395
07/22/02	20:46:05	68.338
07/22/02	20:47:05	68.680
07/22/02	20:48:05	68.139
07/22/02	20:49:05	68.196
07/22/02	20:50:05	68.680
07/22/02	20:51:05	68.850
07/22/02	20:52:05	69.277
07/22/02	20:53:05	68.139
07/22/02	20:54:05	69.106
07/22/02	20:55:05	68.623
07/22/02	20:56:05	68.566
07/22/02	20:57:05	68.680
07/22/02	20:58:05	69.049
07/22/02	20:59:05	69.049
07/22/02	21:00:05	69.049
07/22/02	21:01:05	67.912
07/22/02	21:02:05	68.139
07/22/02	21:03:05	68.793
07/22/02	21:04:05	67.684
07/22/02	21:05:05	67.912
07/22/02	21:06:05	69.817
07/22/02	21:07:05	68.793
07/22/02	21:08:05	68.139
07/22/02	21:09:05	68.680
07/22/02	21:10:05	69.447
07/22/02	21:11:05	68.680
07/22/02	21:12:05	68.395
07/22/02	21:13:05	68.026
07/22/02	21:14:05	68.026
07/22/02	21:15:05	68.338
07/22/02	21:16:05	68.196
07/22/02	21:17:05	68.082
07/22/02	21:18:05	69.220
07/22/02	21:19:05	68.026
07/22/02	21:20:05	69.618
07/22/02	21:21:05	68.026
07/22/02	21:22:05	68.253
07/22/02	21:23:05	68.509
07/22/02	21:24:05	68.793
07/22/02	21:25:05	68.736
07/22/02	21:26:05	69.106
07/22/02	21:27:05	67.912
07/22/02	21:28:05	68.623
07/22/02	21:29:05	68.566
07/22/02	21:30:05	69.334
07/22/02	21:31:05	68.623
07/22/02	21:32:05	69.391
07/22/02	21:33:05	68.907
07/22/02	21:34:05	68.907
07/22/02	21:35:05	68.082
07/22/02	21:36:05	68.907
07/22/02	21:37:05	68.623
07/22/02	21:38:05	69.220
07/22/02	21:39:05	69.277
07/22/02	21:40:05	68.566
07/22/02	21:41:05	68.509
07/22/02	21:42:05	69.049
07/22/02	21:43:05	69.106
07/22/02	21:44:05	69.049
07/22/02	21:45:05	69.163
07/22/02	21:46:05	68.736
07/22/02	21:47:05	68.452
07/22/02	21:48:05	68.793
07/22/02	21:49:05	68.566
07/22/02	21:50:05	68.793
07/22/02	21:51:05	69.675
07/22/02	21:52:05	69.760
07/22/02	21:53:05	69.447
07/22/02	21:54:05	69.220
07/22/02	21:55:05	68.509
07/22/02	21:56:05	69.106
07/22/02	21:57:05	69.106
07/22/02	21:58:05	69.504
07/22/02	21:59:05	69.504
07/22/02	22:00:05	67.969
07/22/02	22:01:05	69.277
07/22/02	22:02:05	68.793
07/22/02	22:03:05	69.277
07/22/02	22:04:05	68.196
07/22/02	22:05:05	69.504
07/22/02	22:06:05	69.277
07/22/02	22:07:05	69.049
07/22/02	22:08:05	69.049
07/22/02	22:09:05	68.395
07/22/02	22:10:05	69.391
07/22/02	22:11:05	69.049
07/22/02	22:12:05	68.907
07/22/02	22:13:05	69.220
07/22/02	22:14:05	67.912

SCHULE AND CAMARO WAY - NO. 7288 cont.

Date	Time	Pres (PSI)
07/22/02	22:15:05	69.391
07/22/02	22:16:05	68.623
07/22/02	22:17:05	69.817
07/22/02	22:18:05	68.964
07/22/02	22:19:05	69.277
07/22/02	22:20:05	68.452
07/22/02	22:21:05	69.760
07/22/02	22:22:05	68.736
07/22/02	22:23:05	68.850
07/22/02	22:24:05	69.874
07/22/02	22:25:05	69.817
07/22/02	22:26:05	69.106
07/22/02	22:27:05	69.561
07/22/02	22:28:05	69.334
07/22/02	22:29:05	69.760
07/22/02	22:30:05	69.931
07/22/02	22:31:05	68.793
07/22/02	22:32:05	69.049
07/22/02	22:33:05	68.793
07/22/02	22:34:05	69.874
07/22/02	22:35:05	69.334
07/22/02	22:36:05	69.817
07/22/02	22:37:05	68.964
07/22/02	22:38:05	68.680
07/22/02	22:39:05	70.585
07/22/02	22:40:05	69.391
07/22/02	22:41:05	69.163
07/22/02	22:42:05	70.869
07/22/02	22:43:05	69.220
07/22/02	22:44:05	70.329
07/22/02	22:45:05	69.561
07/22/02	22:46:05	67.315
07/22/02	22:47:05	64.186
07/22/02	22:48:05	65.836
07/22/02	22:49:05	69.277
07/22/02	22:50:05	66.660
07/22/02	22:51:05	67.201
07/22/02	22:52:05	66.547
07/22/02	22:53:05	66.547
07/22/02	22:54:05	68.026
07/22/02	22:55:05	67.258
07/22/02	22:56:05	67.201
07/22/02	22:57:05	67.855
07/22/02	22:58:05	66.774
07/22/02	22:59:05	67.258
07/22/02	23:00:05	66.604
07/22/02	23:01:05	65.779
07/22/02	23:02:05	67.030
07/22/02	23:03:05	66.490
07/22/02	23:04:05	67.087
07/22/02	23:05:05	66.660
07/22/02	23:06:05	67.030
07/22/02	23:07:05	66.376
07/22/02	23:08:05	66.262
07/22/02	23:09:05	66.547
07/22/02	23:10:05	67.258
07/22/02	23:11:05	66.604
07/22/02	23:12:05	66.205
07/22/02	23:13:05	67.428
07/22/02	23:14:05	66.262
07/22/02	23:15:05	67.428
07/22/02	23:16:05	67.684
07/22/02	23:17:05	67.371
07/22/02	23:18:05	66.831
07/22/02	23:19:05	66.831
07/22/02	23:20:05	67.684
07/22/02	23:21:05	65.893
07/22/02	23:22:05	66.831
07/22/02	23:23:05	67.087
07/22/02	23:24:05	66.660
07/22/02	23:25:05	67.542
07/22/02	23:26:05	66.433
07/22/02	23:27:05	66.660
07/22/02	23:28:05	65.779
07/22/02	23:29:05	68.395
07/22/02	23:30:05	66.319
07/22/02	23:31:05	66.490
07/22/02	23:32:05	65.893
07/22/02	23:33:05	66.660
07/22/02	23:34:05	67.258
07/22/02	23:35:05	66.262
07/22/02	23:36:05	66.604
07/22/02	23:37:05	66.660
07/22/02	23:38:05	67.741
07/22/02	23:39:05	65.893
07/22/02	23:40:05	66.547
07/22/02	23:41:05	67.315
07/22/02	23:42:05	67.087
07/22/02	23:43:05	66.376
07/22/02	23:44:05	67.542
07/22/02	23:45:05	67.315
07/22/02	23:46:05	67.542
07/22/02	23:47:05	67.144
07/22/02	23:48:05	65.779
07/22/02	23:49:05	67.542
07/22/02	23:50:05	66.973
07/22/02	23:51:05	66.774
07/22/02	23:52:05	67.542
07/22/02	23:53:05	66.006
07/22/02	23:54:05	67.087
07/22/02	23:55:05	66.063
07/22/02	23:56:05	66.433
07/22/02	23:57:05	66.916
07/22/02	23:58:05	66.376
07/22/02	23:59:05	67.144
07/23/02	00:00:05	66.376
07/23/02	00:01:05	66.490
07/23/02	00:02:05	67.684
07/23/02	00:03:05	66.604
07/23/02	00:04:05	66.717
07/23/02	00:05:05	66.433
07/23/02	00:06:05	66.490
07/23/02	00:07:05	67.201
07/23/02	00:08:05	67.087
07/23/02	00:09:05	66.262
07/23/02	00:10:05	67.258
07/23/02	00:11:05	66.660
07/23/02	00:12:05	66.973
07/23/02	00:13:05	67.030
07/23/02	00:14:05	66.774
07/23/02	00:15:05	66.973
07/23/02	00:16:05	67.144
07/23/02	00:17:05	67.315
07/23/02	00:18:05	66.490
07/23/02	00:19:05	66.376
07/23/02	00:20:05	67.030
07/23/02	00:21:05	66.490
07/23/02	00:22:05	67.201
07/23/02	00:23:05	66.916
07/23/02	00:24:05	65.551
07/23/02	00:25:05	67.144
07/23/02	00:26:05	68.026
07/23/02	00:27:05	66.262
07/23/02	00:28:05	66.604
07/23/02	00:29:05	65.893
07/23/02	00:30:05	66.604
07/23/02	00:31:05	66.547
07/23/02	00:32:05	66.717
07/23/02	00:33:05	66.547
07/23/02	00:34:05	67.315
07/23/02	00:35:05	67.087
07/23/02	00:36:05	66.660
07/23/02	00:37:05	66.717
07/23/02	00:38:05	66.490
07/23/02	00:39:05	67.315
07/23/02	00:40:05	66.376
07/23/02	00:41:05	66.660
07/23/02	00:42:05	66.604
07/23/02	00:43:05	65.949
07/23/02	00:44:05	66.717
07/23/02	00:45:05	67.087
07/23/02	00:46:05	67.030
07/23/02	00:47:05	66.660
07/23/02	00:48:05	66.120
07/23/02	00:49:05	67.485
07/23/02	00:50:05	66.490
07/23/02	00:51:05	66.433
07/23/02	00:52:05	66.774
07/23/02	00:53:05	66.006
07/23/02	00:54:05	66.916
07/23/02	00:55:05	67.030
07/23/02	00:56:05	65.836
07/23/02	00:57:05	66.262
07/23/02	00:58:05	66.604
07/23/02	00:59:05	66.063
07/23/02	01:00:05	66.433
07/23/02	01:01:05	66.205
07/23/02	01:02:05	66.660
07/23/02	01:03:05	66.774
07/23/02	01:04:05	65.779
07/23/02	01:05:05	66.490
07/23/02	01:06:05	66.547
07/23/02	01:07:05	66.604
07/23/02	01:08:05	66.120
07/23/02	01:09:05	65.608
07/23/02	01:10:05	67.144
07/23/02	01:11:05	66.205
07/23/02	01:12:05	67.087
07/23/02	01:13:05	66.717
07/23/02	01:14:05	66.660
07/23/02	01:15:05	65.779
07/23/02	01:16:05	66.547
07/23/02	01:17:05	66.973
07/23/02	01:18:05	66.120
07/23/02	01:19:05	66.973
07/23/02	01:20:05	67.087
07/23/02	01:21:05	65.608
07/23/02	01:22:05	67.030
07/23/02	01:23:05	66.490
07/23/02	01:24:05	66.063
07/23/02	01:25:05	66.604
07/23/02	01:26:05	66.433
07/23/02	01:27:05	65.949
07/23/02	01:28:05	66.120
07/23/02	01:29:05	66.547
07/23/02	01:30:05	66.831
07/23/02	01:31:05	66.006
07/23/02	01:32:05	66.973
07/23/02	01:33:05	65.949
07/23/02	01:34:05	66.660
07/23/02	01:35:05	66.262
07/23/02	01:36:05	66.433
07/23/02	01:37:05	66.717
07/23/02	01:38:05	66.831
07/23/02	01:39:05	66.120
07/23/02	01:40:05	66.262
07/23/02	01:41:05	66.063
07/23/02	01:42:05	66.433
07/23/02	01:43:05	66.717
07/23/02	01:44:05	65.949
07/23/02	01:45:05	66.490
07/23/02	01:46:05	65.949
07/23/02	01:47:05	65.949
07/23/02	01:48:05	66.063
07/23/02	01:49:05	66.547
07/23/02	01:50:05	66.063
07/23/02	01:51:05	67.144
07/23/02	01:52:05	65.836
07/23/02	01:53:05	66.774
07/23/02	01:54:05	66.262
07/23/02	01:55:05	66.547
07/23/02	01:56:05	66.490
07/23/02	01:57:05	66.063
07/23/02	01:58:05	66.490
07/23/02	01:59:05	66.433
07/23/02	02:00:05	66.376
07/23/02	02:01:05	66.319
07/23/02	02:02:05	66.376
07/23/02	02:03:05	65.409
07/23/02	02:04:05	66.831
07/23/02	02:05:05	65.722
07/23/02	02:06:05	65.893
07/23/02	02:07:05	66.205
07/23/02	02:08:05	66.205
07/23/02	02:09:05	66.547
07/23/02	02:10:05	65.409
07/23/02	02:11:05	67.315
07/23/02	02:12:05	66.063
07/23/02	02:13:05	66.604
07/23/02	02:14:05	65.608
07/23/02	02:15:05	66.774
07/23/02	02:16:05	66.319
07/23/02	02:17:05	65.779
07/23/02	02:18:05	66.319
07/23/02	02:19:05	66.376
07/23/02	02:20:05	71.467
07/23/02	02:21:05	72.178
07/23/02	02:22:05	71.239
07/23/02	02:23:05	71.523
07/23/02	02:24:05	71.353
07/23/02	02:25:05	71.751
07/23/02	02:26:05	71.353
07/23/02	02:27:05	71.580
07/23/02	02:28:05	71.893
07/23/02	02:29:05	71.353
07/23/02	02:30:05	71.751
07/23/02	02:31:05	71.410
07/23/02	02:32:05	71.580
07/23/02	02:33:05	71.751
07/23/02	02:34:05	71.125
07/23/02	02:35:05	72.234
07/23/02	02:36:05	71.893
07/23/02	02:37:05	71.580
07/23/02	02:38:05	71.893

SCHULE AND CAMARO WAY - NO. 7288 cont.

Date	Time	Pres (PSI)
07/23/02	02:39:05	71.893
07/23/02	02:40:05	72.007
07/23/02	02:41:05	71.836
07/23/02	02:42:05	71.694
07/23/02	02:43:05	71.523
07/23/02	02:44:05	71.410
07/23/02	02:45:05	71.694
07/23/02	02:46:05	71.467
07/23/02	02:47:05	71.580
07/23/02	02:48:05	71.353
07/23/02	02:49:05	72.007
07/23/02	02:50:05	71.580
07/23/02	02:51:05	72.234
07/23/02	02:52:05	71.523
07/23/02	02:53:05	71.950
07/23/02	02:54:05	71.467
07/23/02	02:55:05	72.064
07/23/02	02:56:05	71.694
07/23/02	02:57:05	71.353
07/23/02	02:58:05	71.751
07/23/02	02:59:05	71.580
07/23/02	03:00:05	71.523
07/23/02	03:01:05	71.751
07/23/02	03:02:05	71.353
07/23/02	03:03:05	71.694
07/23/02	03:04:05	71.410
07/23/02	03:05:05	71.467
07/23/02	03:06:05	71.580
07/23/02	03:07:05	71.637
07/23/02	03:08:05	71.523
07/23/02	03:09:05	71.893
07/23/02	03:10:05	71.580
07/23/02	03:11:05	71.694
07/23/02	03:12:05	71.637
07/23/02	03:13:05	70.813
07/23/02	03:14:05	71.694
07/23/02	03:15:05	72.007
07/23/02	03:16:05	71.040
07/23/02	03:17:05	71.580
07/23/02	03:18:05	71.580
07/23/02	03:19:05	71.467
07/23/02	03:20:05	71.125
07/23/02	03:21:05	71.410
07/23/02	03:22:05	71.580
07/23/02	03:23:05	71.580
07/23/02	03:24:05	71.580
07/23/02	03:25:05	71.467
07/23/02	03:26:05	71.523
07/23/02	03:27:05	71.751
07/23/02	03:28:05	71.893
07/23/02	03:29:05	71.694
07/23/02	03:30:05	71.410
07/23/02	03:31:05	72.007
07/23/02	03:32:05	71.637
07/23/02	03:33:05	72.234
07/23/02	03:34:05	72.064
07/23/02	03:35:05	72.064
07/23/02	03:36:05	71.637
07/23/02	03:37:05	71.637
07/23/02	03:38:05	71.950
07/23/02	03:39:05	72.121
07/23/02	03:40:05	72.348
07/23/02	03:41:05	71.893
07/23/02	03:42:05	72.234
07/23/02	03:43:05	72.121
07/23/02	03:44:05	72.178
07/23/02	03:45:05	72.064
07/23/02	03:46:05	72.007
07/23/02	03:47:05	72.064
07/23/02	03:48:05	72.462
07/23/02	03:49:05	72.178
07/23/02	03:50:05	72.178
07/23/02	03:51:05	72.604
07/23/02	03:52:05	72.121
07/23/02	03:53:05	71.836
07/23/02	03:54:05	72.348
07/23/02	03:55:05	72.462
07/23/02	03:56:05	72.405
07/23/02	03:57:05	71.836
07/23/02	03:58:05	72.348
07/23/02	03:59:05	72.462
07/23/02	04:00:05	72.462
07/23/02	04:01:05	72.234
07/23/02	04:02:05	71.637
07/23/02	04:03:05	72.178
07/23/02	04:04:05	72.007
07/23/02	04:05:05	72.121
07/23/02	04:06:05	72.007
07/23/02	04:07:05	72.234
07/23/02	04:08:05	71.893
07/23/02	04:09:05	72.604
07/23/02	04:10:05	72.178
07/23/02	04:11:05	71.893
07/23/02	04:12:05	72.291
07/23/02	04:13:05	72.064
07/23/02	04:14:05	72.291
07/23/02	04:15:05	72.064
07/23/02	04:16:05	71.893
07/23/02	04:17:05	72.234
07/23/02	04:18:05	71.950
07/23/02	04:19:05	72.234
07/23/02	04:20:05	72.234
07/23/02	04:21:05	72.007
07/23/02	04:22:05	71.893
07/23/02	04:23:05	72.007
07/23/02	04:24:05	72.234
07/23/02	04:25:05	72.405
07/23/02	04:26:05	71.836
07/23/02	04:27:05	64.414
07/23/02	04:28:05	62.878
07/23/02	04:29:05	71.410
07/23/02	04:30:05	66.831
07/23/02	04:31:05	67.969
07/23/02	04:32:05	68.253
07/23/02	04:33:05	67.855
07/23/02	04:34:05	67.684
07/23/02	04:35:05	67.315
07/23/02	04:36:05	68.253
07/23/02	04:37:05	67.741
07/23/02	04:38:05	68.253
07/23/02	04:39:05	66.717
07/23/02	04:40:05	68.338
07/23/02	04:41:05	67.741
07/23/02	04:42:05	68.253
07/23/02	04:43:05	67.030
07/23/02	04:44:05	67.741
07/23/02	04:45:05	68.139
07/23/02	04:46:05	67.798
07/23/02	04:47:05	66.831
07/23/02	04:48:05	68.623
07/23/02	04:49:05	67.428
07/23/02	04:50:05	67.969
07/23/02	04:51:05	67.741
07/23/02	04:52:05	68.082
07/23/02	04:53:05	67.258
07/23/02	04:54:05	67.684
07/23/02	04:55:05	68.253
07/23/02	04:56:05	67.912
07/23/02	04:57:05	68.139
07/23/02	04:58:05	67.315
07/23/02	04:59:05	67.684
07/23/02	05:00:05	68.026
07/23/02	05:01:05	67.258
07/23/02	05:02:05	67.855
07/23/02	05:03:05	67.258
07/23/02	05:04:05	68.196
07/23/02	05:05:05	67.030
07/23/02	05:06:05	67.371
07/23/02	05:07:05	68.026
07/23/02	05:08:05	67.542
07/23/02	05:09:05	67.627
07/23/02	05:10:05	67.201
07/23/02	05:11:05	67.030
07/23/02	05:12:05	68.082
07/23/02	05:13:05	67.144
07/23/02	05:14:05	67.428
07/23/02	05:15:05	67.485
07/23/02	05:16:05	67.428
07/23/02	05:17:05	67.627
07/23/02	05:18:05	67.201
07/23/02	05:19:05	66.547
07/23/02	05:20:05	67.371
07/23/02	05:21:05	68.082
07/23/02	05:22:05	66.604
07/23/02	05:23:05	67.855
07/23/02	05:24:05	67.485
07/23/02	05:25:05	67.201
07/23/02	05:26:05	67.144
07/23/02	05:27:05	67.087
07/23/02	05:28:05	67.627
07/23/02	05:29:05	68.082
07/23/02	05:30:05	67.258
07/23/02	05:31:05	67.684
07/23/02	05:32:05	67.030
07/23/02	05:33:05	67.485
07/23/02	05:34:05	67.485
07/23/02	05:35:05	67.258
07/23/02	05:36:05	67.428
07/23/02	05:37:05	67.855
07/23/02	05:38:05	67.627
07/23/02	05:39:05	67.144
07/23/02	05:40:05	66.831
07/23/02	05:41:05	67.798
07/23/02	05:42:05	66.604
07/23/02	05:43:05	67.315
07/23/02	05:44:05	66.973
07/23/02	05:45:05	66.660
07/23/02	05:46:05	67.201
07/23/02	05:47:05	67.030
07/23/02	05:48:05	67.485
07/23/02	05:49:05	67.087
07/23/02	05:50:05	67.627
07/23/02	05:51:05	66.973
07/23/02	05:52:05	66.660
07/23/02	05:53:05	68.082
07/23/02	05:54:05	67.485
07/23/02	05:55:05	66.717
07/23/02	05:56:05	67.485
07/23/02	05:57:05	67.428
07/23/02	05:58:05	66.604
07/23/02	05:59:05	66.916
07/23/02	06:00:05	67.087
07/23/02	06:01:05	67.030
07/23/02	06:02:05	66.262
07/23/02	06:03:05	67.485
07/23/02	06:04:05	66.262
07/23/02	06:05:05	67.627
07/23/02	06:06:05	66.916
07/23/02	06:07:05	66.120
07/23/02	06:08:05	67.485
07/23/02	06:09:05	66.831
07/23/02	06:10:05	66.717
07/23/02	06:11:05	66.916
07/23/02	06:12:05	66.916
07/23/02	06:13:05	67.201
07/23/02	06:14:05	66.604
07/23/02	06:15:05	67.542
07/23/02	06:16:05	65.722
07/23/02	06:17:05	66.774
07/23/02	06:18:05	66.490
07/23/02	06:19:05	66.490
07/23/02	06:20:05	66.262
07/23/02	06:21:05	65.893
07/23/02	06:22:05	66.547
07/23/02	06:23:05	66.717
07/23/02	06:24:05	65.608
07/23/02	06:25:05	66.319
07/23/02	06:26:05	65.779
07/23/02	06:27:05	66.262
07/23/02	06:28:05	66.063
07/23/02	06:29:05	66.547
07/23/02	06:30:05	66.006
07/23/02	06:31:05	67.542
07/23/02	06:32:05	66.063
07/23/02	06:33:05	66.916
07/23/02	06:34:05	66.376
07/23/02	06:35:05	65.949
07/23/02	06:36:05	66.490
07/23/02	06:37:05	65.295
07/23/02	06:38:05	66.717
07/23/02	06:39:05	65.949
07/23/02	06:40:05	65.722
07/23/02	06:41:05	66.547
07/23/02	06:42:05	66.490
07/23/02	06:43:05	65.494
07/23/02	06:44:05	66.262
07/23/02	06:45:05	66.006
07/23/02	06:46:05	66.433
07/23/02	06:47:05	65.665
07/23/02	06:48:05	65.295
07/23/02	06:49:05	66.063
07/23/02	06:50:05	65.722
07/23/02	06:51:05	65.665
07/23/02	06:52:05	65.665
07/23/02	06:53:05	65.893
07/23/02	06:54:05	64.698
07/23/02	06:55:05	65.608
07/23/02	06:56:05	65.125
07/23/02	06:57:05	65.779
07/23/02	06:58:05	66.604
07/23/02	06:59:05	64.414
07/23/02	07:00:05	66.319
07/23/02	07:01:05	66.120
07/23/02	07:02:05	65.893

SCHULE AND CAMARO WAY - NO. 7288 cont.

Date	Time	Pres (PSI)
07/23/02	07:03:05	64.954
07/23/02	07:04:05	65.295
07/23/02	07:05:05	64.698
07/23/02	07:06:05	66.205
07/23/02	07:07:05	64.698
07/23/02	07:08:05	64.243
07/23/02	07:09:05	65.608
07/23/02	07:10:05	65.722
07/23/02	07:11:05	64.954
07/23/02	07:12:05	66.262
07/23/02	07:13:05	64.897
07/23/02	07:14:05	65.949
07/23/02	07:15:05	64.840
07/23/02	07:16:05	66.063
07/23/02	07:17:05	65.494
07/23/02	07:18:05	64.414
07/23/02	07:19:05	65.665
07/23/02	07:20:05	65.239
07/23/02	07:21:05	63.930
07/23/02	07:22:05	64.641
07/23/02	07:23:05	65.893
07/23/02	07:24:05	63.760
07/23/02	07:25:05	66.120
07/23/02	07:26:05	64.840
07/23/02	07:27:05	64.186
07/23/02	07:28:05	75.021
07/23/02	07:29:05	63.930
07/23/02	07:30:05	67.684
07/23/02	07:31:05	66.006
07/23/02	07:32:05	67.315
07/23/02	07:33:05	66.376
07/23/02	07:34:05	67.315
07/23/02	07:35:05	67.315
07/23/02	07:36:05	67.201
07/23/02	07:37:05	66.604
07/23/02	07:38:05	67.030
07/23/02	07:39:05	67.912
07/23/02	07:40:05	66.205
07/23/02	07:41:05	66.547
07/23/02	07:42:05	68.139
07/23/02	07:43:05	67.485
07/23/02	07:44:05	66.063
07/23/02	07:45:05	68.736
07/23/02	07:46:05	66.319
07/23/02	07:47:05	67.087
07/23/02	07:48:05	67.371
07/23/02	07:49:05	66.660
07/23/02	07:50:05	66.604
07/23/02	07:51:05	67.741
07/23/02	07:52:05	66.490
07/23/02	07:53:05	67.542
07/23/02	07:54:05	67.201
07/23/02	07:55:05	66.774
07/23/02	07:56:05	67.627
07/23/02	07:57:05	67.684
07/23/02	07:58:05	66.973
07/23/02	07:59:05	67.087
07/23/02	08:00:05	66.916
07/23/02	08:01:05	67.371
07/23/02	08:02:05	66.717
07/23/02	08:03:05	66.831
07/23/02	08:04:05	67.371
07/23/02	08:05:05	66.433
07/23/02	08:06:05	66.916
07/23/02	08:07:05	67.798
07/23/02	08:08:05	66.262
07/23/02	08:09:05	68.253
07/23/02	08:10:05	66.916
07/23/02	08:11:05	68.026
07/23/02	08:12:05	66.433
07/23/02	08:13:05	66.490
07/23/02	08:14:05	67.371
07/23/02	08:15:05	67.741
07/23/02	08:16:05	67.258
07/23/02	08:17:05	66.660
07/23/02	08:18:05	67.201
07/23/02	08:19:05	66.717
07/23/02	08:20:05	66.973
07/23/02	08:21:05	66.717
07/23/02	08:22:05	66.973
07/23/02	08:23:05	67.258
07/23/02	08:24:05	67.087
07/23/02	08:25:05	66.831
07/23/02	08:26:05	66.831
07/23/02	08:27:05	66.973
07/23/02	08:28:05	67.855
07/23/02	08:29:05	65.722
07/23/02	08:30:05	67.258
07/23/02	08:31:05	66.319
07/23/02	08:32:05	65.949
07/23/02	08:33:05	67.627
07/23/02	08:34:05	66.973
07/23/02	08:35:05	66.831
07/23/02	08:36:05	66.604
07/23/02	08:37:05	67.030
07/23/02	08:38:05	66.604
07/23/02	08:39:05	66.376
07/23/02	08:40:05	66.916
07/23/02	08:41:05	67.741
07/23/02	08:42:05	66.660
07/23/02	08:43:05	67.258
07/23/02	08:44:05	66.490
07/23/02	08:45:05	65.949
07/23/02	08:46:05	67.258
07/23/02	08:47:05	66.604
07/23/02	08:48:05	66.717
07/23/02	08:49:05	67.258
07/23/02	08:50:05	65.551
07/23/02	08:51:05	66.916
07/23/02	08:52:05	67.485
07/23/02	08:53:05	75.846
07/23/02	08:54:05	65.665
07/23/02	08:55:05	68.253
07/23/02	08:56:05	68.680
07/23/02	08:57:05	67.969
07/23/02	08:58:05	68.680
07/23/02	08:59:05	68.736
07/23/02	09:00:05	68.452
07/23/02	09:01:05	67.428
07/23/02	09:02:05	68.338
07/23/02	09:03:05	68.452
07/23/02	09:04:05	68.139
07/23/02	09:05:05	67.684
07/23/02	09:06:05	68.736
07/23/02	09:07:05	67.912
07/23/02	09:08:05	68.338
07/23/02	09:09:05	67.315
07/23/02	09:10:05	68.338
07/23/02	09:11:05	67.798
07/23/02	09:12:05	68.139
07/23/02	09:13:05	68.082
07/23/02	09:14:05	67.912
07/23/02	09:15:05	67.855
07/23/02	09:16:05	67.684
07/23/02	09:17:05	68.139
07/23/02	09:18:05	68.623
07/23/02	09:19:05	67.798
07/23/02	09:20:05	67.684
07/23/02	09:21:05	67.798
07/23/02	09:22:05	68.253
07/23/02	09:23:05	68.509
07/23/02	09:24:05	67.428
07/23/02	09:25:05	68.509
07/23/02	09:26:05	68.452
07/23/02	09:27:05	67.485
07/23/02	09:28:05	66.660
07/23/02	09:29:05	68.509
07/23/02	09:30:05	67.798
07/23/02	09:31:05	67.969
07/23/02	09:32:05	68.395
07/23/02	09:33:05	67.485
07/23/02	09:34:05	67.144
07/23/02	09:35:05	68.026
07/23/02	09:36:05	68.395
07/23/02	09:37:05	67.087
07/23/02	09:38:05	68.623
07/23/02	09:39:05	68.139
07/23/02	09:40:05	68.623
07/23/02	09:41:05	67.798
07/23/02	09:42:05	68.793
07/23/02	09:43:05	67.912
07/23/02	09:44:05	68.395
07/23/02	09:45:05	68.196
07/23/02	09:46:05	67.798
07/23/02	09:47:05	67.798
07/23/02	09:48:05	67.798
07/23/02	09:49:05	68.253
07/23/02	09:50:05	67.855
07/23/02	09:51:05	67.912
07/23/02	09:52:05	68.850
07/23/02	09:53:05	68.196
07/23/02	09:54:05	67.855
07/23/02	09:55:05	68.680
07/23/02	09:56:05	68.623
07/23/02	09:57:05	68.509
07/23/02	09:58:05	68.452
07/23/02	09:59:05	67.485
07/23/02	10:00:05	68.793
07/23/02	10:01:05	68.082
07/23/02	10:02:05	68.850
07/23/02	10:03:05	68.395
07/23/02	10:04:05	67.912
07/23/02	10:05:05	68.196
07/23/02	10:06:05	67.969
07/23/02	10:07:05	68.566
07/23/02	10:08:05	67.741
07/23/02	10:09:05	68.338
07/23/02	10:10:05	68.082
07/23/02	10:11:05	68.736
07/23/02	10:12:05	68.082
07/23/02	10:13:05	67.741
07/23/02	10:14:05	68.623
07/23/02	10:15:05	68.139
07/23/02	10:16:05	68.509
07/23/02	10:17:05	68.253
07/23/02	10:18:05	68.736
07/23/02	10:19:05	67.741
07/23/02	10:20:05	68.139
07/23/02	10:21:05	68.566
07/23/02	10:22:05	68.964
07/23/02	10:23:05	68.452
07/23/02	10:24:05	68.793
07/23/02	10:25:05	68.793
07/23/02	10:26:05	67.969
07/23/02	10:27:05	68.026
07/23/02	10:28:05	68.907
07/23/02	10:29:05	68.850
07/23/02	10:30:05	68.680
07/23/02	10:31:05	68.736
07/23/02	10:32:05	68.907
07/23/02	10:33:05	67.969
07/23/02	10:34:05	68.509
07/23/02	10:35:05	69.391
07/23/02	10:36:05	67.855
07/23/02	10:37:05	69.163
07/23/02	10:38:05	68.566
07/23/02	10:39:05	68.793
07/23/02	10:40:05	68.082
07/23/02	10:41:05	68.566
07/23/02	10:42:05	69.163
07/23/02	10:43:05	68.395
07/23/02	10:44:05	68.907
07/23/02	10:45:05	68.680
07/23/02	10:46:05	68.338
07/23/02	10:47:05	68.793
07/23/02	10:48:05	68.907
07/23/02	10:49:05	68.736
07/23/02	10:50:05	68.395
07/23/02	10:51:05	68.253
07/23/02	10:52:05	68.338
07/23/02	10:53:05	71.836
07/23/02	10:54:05	68.026
07/23/02	10:55:05	68.566
07/23/02	10:56:05	68.793
07/23/02	10:57:05	68.452
07/23/02	10:58:05	67.684
07/23/02	10:59:05	62.167
07/23/02	11:00:05	65.182
07/23/02	11:01:05	66.063
07/23/02	11:02:05	65.125
07/23/02	11:03:05	66.376
07/23/02	11:04:05	58.499
07/23/02	11:05:05	61.086
07/23/02	11:06:05	56.707
07/23/02	11:07:05	58.186
07/23/02	11:08:05	57.844
07/23/02	11:09:05	58.499
07/23/02	11:10:05	57.958
07/23/02	11:11:05	58.015
07/23/02	11:12:05	56.764
07/23/02	11:13:05	56.707
07/23/02	11:14:05	57.361
07/23/02	11:15:05	57.077
07/23/02	11:16:05	56.878
07/23/02	11:17:05	57.361
07/23/02	11:18:05	56.707
07/23/02	11:19:05	57.133
07/23/02	11:20:05	56.878
07/23/02	11:21:05	57.475
07/23/02	11:22:05	57.901
07/23/02	11:23:05	58.897
07/23/02	11:24:05	62.110
07/23/02	11:25:05	69.675
07/23/02	11:26:05	63.532

SCHULE AND CAMARO WAY - NO. 7288 cont.

Date	Time	Pres (PSI)
07/23/02	11:27:05	65.352
07/23/02	11:28:05	64.186
07/23/02	11:29:05	65.836
07/23/02	11:30:05	64.641
07/23/02	11:31:05	64.357
07/23/02	11:32:05	64.897
07/23/02	11:33:05	64.243
07/23/02	11:34:05	65.722
07/23/02	11:35:05	65.125
07/23/02	11:36:05	65.239
07/23/02	11:37:05	65.011
07/23/02	11:38:05	64.300
07/23/02	11:39:05	66.319
07/23/02	11:40:05	63.873
07/23/02	11:41:05	65.409
07/23/02	11:42:05	64.584
07/23/02	11:43:05	65.125
07/23/02	11:44:05	65.352
07/23/02	11:45:05	65.722
07/23/02	11:46:05	63.475
07/23/02	11:47:05	65.239
07/23/02	11:48:05	64.129
07/23/02	11:49:05	64.641
07/23/02	11:50:05	65.295
07/23/02	11:51:05	63.930
07/23/02	11:52:05	66.319
07/23/02	11:53:05	64.755
07/23/02	11:54:05	64.755
07/23/02	11:55:05	74.083
07/23/02	11:56:05	65.011
07/23/02	11:57:05	66.006
07/23/02	11:58:05	66.120
07/23/02	11:59:05	66.604
07/23/02	12:00:05	66.774
07/23/02	12:01:05	66.660
07/23/02	12:02:05	65.722
07/23/02	12:03:05	66.376
07/23/02	12:04:05	67.201
07/23/02	12:05:05	65.409
07/23/02	12:06:05	66.831
07/23/02	12:07:05	66.433
07/23/02	12:08:05	66.547
07/23/02	12:09:05	66.433
07/23/02	12:10:05	62.224
07/23/02	12:11:05	56.423
07/23/02	12:12:05	59.778
07/23/02	12:13:05	59.778
07/23/02	12:14:05	58.726
07/23/02	12:15:05	58.413
07/23/02	12:16:05	59.010
07/23/02	12:17:05	58.243
07/23/02	12:18:05	59.665
07/23/02	12:19:05	73.713
07/23/02	12:20:05	65.182
07/23/02	12:21:05	65.409
07/23/02	12:22:05	65.182
07/23/02	12:23:05	65.779
07/23/02	12:24:05	65.409
07/23/02	12:25:05	65.722
07/23/02	12:26:05	65.722
07/23/02	12:27:05	65.494
07/23/02	12:28:05	65.551
07/23/02	12:29:05	65.182
07/23/02	12:30:05	65.409
07/23/02	12:31:05	65.893
07/23/02	12:32:05	65.551
07/23/02	12:33:05	65.239
07/23/02	12:34:05	67.798
07/23/02	12:35:05	68.566
07/23/02	12:36:05	71.296
07/23/02	12:37:05	71.836
07/23/02	12:38:05	72.064
07/23/02	12:39:05	71.637
07/23/02	12:40:05	72.291
07/23/02	12:41:05	72.405
07/23/02	12:42:05	71.580
07/23/02	12:43:05	71.523
07/23/02	12:44:05	72.604
07/23/02	12:45:05	71.751
07/23/02	12:46:05	71.694
07/23/02	12:47:05	72.291
07/23/02	12:48:05	72.291
07/23/02	12:49:05	71.893
07/23/02	12:50:05	72.121
07/23/02	12:51:05	71.694
07/23/02	12:52:05	72.178
07/23/02	12:53:05	71.353
07/23/02	12:54:05	72.547
07/23/02	12:55:05	72.007
07/23/02	12:56:05	71.751
07/23/02	12:57:05	72.121
07/23/02	12:58:05	72.178
07/23/02	12:59:05	72.007
07/23/02	13:00:05	71.950
07/23/02	13:01:05	72.121
07/23/02	13:02:05	72.348
07/23/02	13:03:05	71.751
07/23/02	13:04:05	72.348
07/23/02	13:05:05	71.836
07/23/02	13:06:05	71.751
07/23/02	13:07:05	72.007
07/23/02	13:08:05	72.007
07/23/02	13:09:05	72.661
07/23/02	13:10:05	71.296
07/23/02	13:11:05	72.889
07/23/02	13:12:05	72.121
07/23/02	13:13:05	70.756
07/23/02	13:14:05	72.234
07/23/02	13:15:05	71.410
07/23/02	13:16:05	71.836
07/23/02	13:17:05	71.580
07/23/02	13:18:05	71.296
07/23/02	13:19:05	72.064
07/23/02	13:20:05	71.182
07/23/02	13:21:05	71.410
07/23/02	13:22:05	71.467
07/23/02	13:23:05	71.467
07/23/02	13:24:05	71.694
07/23/02	13:25:05	71.751
07/23/02	13:26:05	71.694
07/23/02	13:27:05	71.580
07/23/02	13:28:05	71.467
07/23/02	13:29:05	71.580
07/23/02	13:30:05	71.353
07/23/02	13:31:05	72.007
07/23/02	13:32:05	70.813
07/23/02	13:33:05	72.121
07/23/02	13:34:05	72.007
07/23/02	13:35:05	72.121
07/23/02	13:36:05	71.410
07/23/02	13:37:05	72.234
07/23/02	13:38:05	71.467
07/23/02	13:39:05	71.523
07/23/02	13:40:05	71.637
07/23/02	13:41:05	71.467
07/23/02	13:42:05	71.467
07/23/02	13:43:05	71.040
07/23/02	13:44:05	71.040
07/23/02	13:45:05	70.585
07/23/02	13:46:05	70.926
07/23/02	13:47:05	71.125
07/23/02	13:48:05	71.182
07/23/02	13:49:05	70.471
07/23/02	13:50:05	71.239
07/23/02	13:51:05	70.926
07/23/02	13:52:05	70.813
07/23/02	13:53:05	71.353
07/23/02	13:54:05	71.353
07/23/02	13:55:05	71.040
07/23/02	13:56:05	71.523
07/23/02	13:57:05	71.182
07/23/02	13:58:05	70.329
07/23/02	13:59:05	70.926
07/23/02	14:00:05	71.353
07/23/02	14:01:05	70.756
07/23/02	14:02:05	70.926
07/23/02	14:03:05	70.699
07/23/02	14:04:05	70.926
07/23/02	14:05:05	71.125
07/23/02	14:06:05	71.182
07/23/02	14:07:05	71.637
07/23/02	14:08:05	70.158
07/23/02	14:09:05	71.040
07/23/02	14:10:05	71.239
07/23/02	14:11:05	71.125
07/23/02	14:12:05	71.296
07/23/02	14:13:05	70.756
07/23/02	14:14:05	71.182
07/23/02	14:15:05	71.637
07/23/02	14:16:05	70.813
07/23/02	14:17:05	71.239
07/23/02	14:18:05	71.410
07/23/02	14:19:05	71.751
07/23/02	14:20:05	71.410
07/23/02	14:21:05	71.893
07/23/02	14:22:05	71.410
07/23/02	14:23:05	71.637
07/23/02	14:24:05	70.869
07/23/02	14:25:05	71.580
07/23/02	14:26:05	71.353
07/23/02	14:27:05	71.296
07/23/02	14:28:05	71.950
07/23/02	14:29:05	71.836
07/23/02	14:30:05	71.410
07/23/02	14:31:05	72.234
07/23/02	14:32:05	71.694
07/23/02	14:33:05	71.950
07/23/02	14:34:05	72.064
07/23/02	14:35:05	71.580
07/23/02	14:36:05	72.178
07/23/02	14:37:05	71.751
07/23/02	14:38:05	71.836
07/23/02	14:39:05	71.296
07/23/02	14:40:05	71.410
07/23/02	14:41:05	72.007
07/23/02	14:42:05	72.405
07/23/02	14:43:05	72.462
07/23/02	14:44:05	68.850
07/23/02	14:45:05	61.342
07/23/02	14:46:05	68.736
07/23/02	14:47:05	43.540
07/23/02	14:48:05	55.882
07/23/02	14:49:05	53.977
07/23/02	14:50:05	54.745
07/23/02	14:51:05	54.517
07/23/02	14:52:05	54.631
07/23/02	14:53:05	54.034
07/23/02	14:54:05	54.745
07/23/02	14:55:05	54.290
07/23/02	14:56:05	54.346
07/23/02	14:57:05	54.517
07/23/02	14:58:05	54.147
07/23/02	14:59:05	53.636
07/23/02	15:00:05	53.636
07/23/02	15:01:05	53.209
07/23/02	15:02:05	53.920
07/23/02	15:03:05	52.555
07/23/02	15:04:05	53.266
07/23/02	15:05:05	53.209
07/23/02	15:06:05	53.436
07/23/02	15:07:05	55.825
07/23/02	15:08:05	65.779
07/23/02	15:09:05	65.239
07/23/02	15:10:05	66.376
07/23/02	15:11:05	64.528
07/23/02	15:12:05	65.893
07/23/02	15:13:05	65.352
07/23/02	15:14:05	65.239
07/23/02	15:15:05	66.205
07/23/02	15:16:05	64.755
07/23/02	15:17:05	65.665
07/23/02	15:18:05	64.584
07/23/02	15:19:05	66.006
07/23/02	15:20:05	65.239
07/23/02	15:21:05	65.352
07/23/02	15:22:05	65.068
07/23/02	15:23:05	67.371
07/23/02	15:24:05	64.755
07/23/02	15:25:05	66.262
07/23/02	15:26:05	65.182
07/23/02	15:27:05	66.547
07/23/02	15:28:05	65.011
07/23/02	15:29:05	66.831
07/23/02	15:30:05	64.897
07/23/02	15:31:05	65.608
07/23/02	15:32:05	65.665
07/23/02	15:33:05	65.409
07/23/02	15:34:05	64.755
07/23/02	15:35:05	44.564
07/23/02	15:36:05	52.014
07/23/02	15:37:05	51.019
07/23/02	15:38:05	51.360
07/23/02	15:39:05	51.616
07/23/02	15:40:05	51.360
07/23/02	15:41:05	51.673
07/23/02	15:42:05	51.019
07/23/02	15:43:05	51.304
07/23/02	15:44:05	51.304
07/23/02	15:45:05	51.559
07/23/02	15:46:05	51.503
07/23/02	15:47:05	50.536
07/23/02	15:48:05	50.479
07/23/02	15:49:05	50.024
07/23/02	15:50:05	50.024

SCHULE AND CAMARO WAY - NO. 7288 cont.

Date	Time	Pres (PSI)
07/23/02	15:51:05	51.019
07/23/02	15:52:05	50.735
07/23/02	15:53:05	51.559
07/23/02	15:54:05	60.575
07/23/02	15:55:05	63.646
07/23/02	15:56:05	77.979
07/23/02	15:57:05	74.538
07/23/02	15:58:05	74.197
07/23/02	15:59:05	74.481
07/23/02	16:00:05	73.116
07/23/02	16:01:05	73.884
07/23/02	16:02:05	74.254
07/23/02	16:03:05	74.083
07/23/02	16:04:05	74.367
07/23/02	16:05:05	73.600
07/23/02	16:06:05	73.173
07/23/02	16:07:05	73.656
07/23/02	16:08:05	73.969
07/23/02	16:09:05	73.059
07/23/02	16:10:05	73.770
07/23/02	16:11:05	74.595
07/23/02	16:12:05	73.827
07/23/02	16:13:05	73.315
07/23/02	16:14:05	73.486
07/23/02	16:15:05	74.197
07/23/02	16:16:05	74.595
07/23/02	16:17:05	74.140
07/23/02	16:18:05	73.827
07/23/02	16:19:05	59.665
07/23/02	16:20:05	74.737
07/23/02	16:21:05	59.067
07/23/02	16:22:05	67.542
07/23/02	16:23:05	65.551
07/23/02	16:24:05	63.987
07/23/02	16:25:05	65.409
07/23/02	16:26:05	65.722
07/23/02	16:27:05	64.357
07/23/02	16:28:05	65.665
07/23/02	16:29:05	65.182
07/23/02	16:30:05	64.357
07/23/02	16:31:05	65.893
07/23/02	16:32:05	65.239
07/23/02	16:33:05	65.409
07/23/02	16:34:05	68.395
07/23/02	16:35:05	72.832
07/23/02	16:36:05	71.836
07/23/02	16:37:05	72.007
07/23/02	16:38:05	71.694
07/23/02	16:39:05	71.580
07/23/02	16:40:05	71.580
07/23/02	16:41:05	72.064
07/23/02	16:42:05	71.637
07/23/02	16:43:05	71.353
07/23/02	16:44:05	71.410
07/23/02	16:45:05	71.637
07/23/02	16:46:05	71.580
07/23/02	16:47:05	70.983
07/23/02	16:48:05	70.869
07/23/02	16:49:05	71.040
07/23/02	16:50:05	70.471
07/23/02	16:51:05	70.869
07/23/02	16:52:05	71.296
07/23/02	16:53:05	70.813
07/23/02	16:54:05	70.813
07/23/02	16:55:05	71.410
07/23/02	16:56:05	70.869
07/23/02	16:57:05	71.125
07/23/02	16:58:05	70.756
07/23/02	16:59:05	70.983
07/23/02	17:00:05	71.125
07/23/02	17:01:05	70.813
07/23/02	17:02:05	71.239
07/23/02	17:03:05	69.931
07/23/02	17:04:05	71.040
07/23/02	17:05:05	70.813
07/23/02	17:06:05	71.239
07/23/02	17:07:05	71.182
07/23/02	17:08:05	70.642
07/23/02	17:09:05	71.353
07/23/02	17:10:05	70.926
07/23/02	17:11:05	70.756
07/23/02	17:12:05	71.040
07/23/02	17:13:05	71.296
07/23/02	17:14:05	70.983
07/23/02	17:15:05	71.580
07/23/02	17:16:05	71.239
07/23/02	17:17:05	70.699
07/23/02	17:18:05	71.523
07/23/02	17:19:05	70.699
07/23/02	17:20:05	71.040
07/23/02	17:21:05	70.813
07/23/02	17:22:05	70.699
07/23/02	17:23:05	70.272
07/23/02	17:24:05	71.296
07/23/02	17:25:05	71.040
07/23/02	17:26:05	71.040
07/23/02	17:27:05	70.585
07/23/02	17:28:05	70.215
07/23/02	17:29:05	70.272
07/23/02	17:30:05	70.215
07/23/02	17:31:05	69.618
07/23/02	17:32:05	69.931
07/23/02	17:33:05	70.471
07/23/02	17:34:05	70.102
07/23/02	17:35:05	70.528
07/23/02	17:36:05	70.045
07/23/02	17:37:05	70.386
07/23/02	17:38:05	69.931
07/23/02	17:39:05	70.386
07/23/02	17:40:05	70.158
07/23/02	17:41:05	70.386
07/23/02	17:42:05	70.158
07/23/02	17:43:05	70.158
07/23/02	17:44:05	69.931
07/23/02	17:45:05	70.386
07/23/02	17:46:05	69.988
07/23/02	17:47:05	70.329
07/23/02	17:48:05	70.158
07/23/02	17:49:05	70.045
07/23/02	17:50:05	69.931
07/23/02	17:51:05	70.528
07/23/02	17:52:05	69.931
07/23/02	17:53:05	69.988
07/23/02	17:54:05	70.329
07/23/02	17:55:05	70.528
07/23/02	17:56:05	69.931
07/23/02	17:57:05	69.817
07/23/02	17:58:05	69.618
07/23/02	17:59:05	70.756
07/23/02	18:00:05	70.386
07/23/02	18:01:05	70.158
07/23/02	18:02:05	70.102
07/23/02	18:03:05	69.988
07/23/02	18:04:05	69.618
07/23/02	18:05:05	70.272
07/23/02	18:06:05	70.272
07/23/02	18:07:05	70.329
07/23/02	18:08:05	69.874
07/23/02	18:09:05	70.642
07/23/02	18:10:05	69.675
07/23/02	18:11:05	69.817
07/23/02	18:12:05	69.874
07/23/02	18:13:05	69.447
07/23/02	18:14:05	70.215
07/23/02	18:15:05	70.102
07/23/02	18:16:05	70.329
07/23/02	18:17:05	69.618
07/23/02	18:18:05	69.874
07/23/02	18:19:05	70.386
07/23/02	18:20:05	69.675
07/23/02	18:21:05	69.874
07/23/02	18:22:05	69.618
07/23/02	18:23:05	70.102
07/23/02	18:24:05	70.102
07/23/02	18:25:05	69.618
07/23/02	18:26:05	70.158
07/23/02	18:27:05	69.561
07/23/02	18:28:05	70.329
07/23/02	18:29:05	70.329
07/23/02	18:30:05	70.158
07/23/02	18:31:05	72.064
07/23/02	18:32:05	70.813
07/23/02	18:33:05	71.410
07/23/02	18:34:05	70.386
07/23/02	18:35:05	70.642
07/23/02	18:36:05	70.386
07/23/02	18:37:05	70.813
07/23/02	18:38:05	71.296
07/23/02	18:39:05	70.869
07/23/02	18:40:05	70.756
07/23/02	18:41:05	70.813
07/23/02	18:42:05	70.926
07/23/02	18:43:05	70.756
07/23/02	18:44:05	70.983
07/23/02	18:45:05	70.585
07/23/02	18:46:05	71.125
07/23/02	18:47:05	70.329
07/23/02	18:48:05	71.410
07/23/02	18:49:05	71.182
07/23/02	18:50:05	70.813
07/23/02	18:51:05	71.637
07/23/02	18:52:05	71.040
07/23/02	18:53:05	72.007
07/23/02	18:54:05	71.040
07/23/02	18:55:05	71.296
07/23/02	18:56:05	71.523
07/23/02	18:57:05	70.869
07/23/02	18:58:05	70.699
07/23/02	18:59:05	70.471
07/23/02	19:00:05	71.523
07/23/02	19:01:05	70.926
07/23/02	19:02:05	71.410
07/23/02	19:03:05	71.467
07/23/02	19:04:05	71.467
07/23/02	19:05:05	70.983
07/23/02	19:06:05	71.125
07/23/02	19:07:05	71.040
07/23/02	19:08:05	70.983
07/23/02	19:09:05	71.182
07/23/02	19:10:05	70.983
07/23/02	19:11:05	71.353
07/23/02	19:12:05	71.182
07/23/02	19:13:05	71.182
07/23/02	19:14:05	70.386
07/23/02	19:15:05	71.182
07/23/02	19:16:05	70.585
07/23/02	19:17:05	71.182
07/23/02	19:18:05	71.580
07/23/02	19:19:05	71.040
07/23/02	19:20:05	71.410
07/23/02	19:21:05	71.296
07/23/02	19:22:05	71.467
07/23/02	19:23:05	71.125
07/23/02	19:24:05	71.523
07/23/02	19:25:05	71.893
07/23/02	19:26:05	71.353
07/23/02	19:27:05	71.182
07/23/02	19:28:05	70.813
07/23/02	19:29:05	71.296
07/23/02	19:30:05	71.353
07/23/02	19:31:05	71.523
07/23/02	19:32:05	71.182
07/23/02	19:33:05	71.125
07/23/02	19:34:05	71.637
07/23/02	19:35:05	71.580
07/23/02	19:36:05	71.523
07/23/02	19:37:05	71.893
07/23/02	19:38:05	71.467
07/23/02	19:39:05	71.040
07/23/02	19:40:05	71.467
07/23/02	19:41:05	71.836
07/23/02	19:42:05	71.182
07/23/02	19:43:05	71.296
07/23/02	19:44:05	71.751
07/23/02	19:45:05	71.410
07/23/02	19:46:05	71.523
07/23/02	19:47:05	71.637
07/23/02	19:48:05	70.756
07/23/02	19:49:05	71.580
07/23/02	19:50:05	71.751
07/23/02	19:51:05	72.234
07/23/02	19:52:05	71.410
07/23/02	19:53:05	71.637
07/23/02	19:54:05	71.893
07/23/02	19:55:05	71.694
07/23/02	19:56:05	71.467
07/23/02	19:57:05	71.523
07/23/02	19:58:05	71.467
07/23/02	19:59:05	71.296
07/23/02	20:00:05	71.580
07/23/02	20:01:05	71.893
07/23/02	20:02:05	71.353
07/23/02	20:03:05	72.007
07/23/02	20:04:05	71.637
07/23/02	20:05:05	71.751
07/23/02	20:06:05	72.178
07/23/02	20:07:05	72.007
07/23/02	20:08:05	71.694
07/23/02	20:09:05	71.637
07/23/02	20:10:05	72.775
07/23/02	20:11:05	72.064
07/23/02	20:12:05	72.234
07/23/02	20:13:05	71.694
07/23/02	20:14:05	71.893

SCHULE AND CAMARO WAY - NO. 7288 cont.

Date	Time	Pres (PSI)	Date	Time	Pres (PSI)	Date	Time	Pres (PSI)	Date	Time	Pres (PSI)
07/23/02	20:15:05	71.296	07/23/02	21:21:05	66.774	07/23/02	22:27:05	67.627	07/23/02	23:33:05	67.201
07/23/02	20:16:05	71.893	07/23/02	21:22:05	67.315	07/23/02	22:28:05	66.490	07/23/02	23:34:05	65.836
07/23/02	20:17:05	71.467	07/23/02	21:23:05	68.509	07/23/02	22:29:05	67.087	07/23/02	23:35:05	67.371
07/23/02	20:18:05	71.580	07/23/02	21:24:05	66.831	07/23/02	22:30:05	65.893	07/23/02	23:36:05	67.258
07/23/02	20:19:05	71.694	07/23/02	21:25:05	69.049	07/23/02	22:31:05	66.319	07/23/02	23:37:05	66.916
07/23/02	20:20:05	71.836	07/23/02	21:26:05	67.855	07/23/02	22:32:05	65.665	07/23/02	23:38:05	67.485
07/23/02	20:21:05	71.239	07/23/02	21:27:05	67.258	07/23/02	22:33:05	65.068	07/23/02	23:39:05	67.030
07/23/02	20:22:05	71.637	07/23/02	21:28:05	67.371	07/23/02	22:34:05	65.068	07/23/02	23:40:05	67.969
07/23/02	20:23:05	71.523	07/23/02	21:29:05	67.201	07/23/02	22:35:05	65.608	07/23/02	23:41:05	66.490
07/23/02	20:24:05	71.467	07/23/02	21:30:05	67.087	07/23/02	22:36:05	67.201	07/23/02	23:42:05	68.139
07/23/02	20:25:05	72.234	07/23/02	21:31:05	66.660	07/23/02	22:37:05	66.433	07/23/02	23:43:05	67.855
07/23/02	20:26:05	71.836	07/23/02	21:32:05	67.428	07/23/02	22:38:05	66.319	07/23/02	23:44:05	66.547
07/23/02	20:27:05	71.694	07/23/02	21:33:05	65.494	07/23/02	22:39:05	66.262	07/23/02	23:45:05	68.026
07/23/02	20:28:05	71.467	07/23/02	21:34:05	67.542	07/23/02	22:40:05	66.433	07/23/02	23:46:05	67.144
07/23/02	20:29:05	72.178	07/23/02	21:35:05	67.087	07/23/02	22:41:05	67.627	07/23/02	23:47:05	66.973
07/23/02	20:30:05	71.182	07/23/02	21:36:05	67.087	07/23/02	22:42:05	66.262	07/23/02	23:48:05	67.912
07/23/02	20:31:05	71.467	07/23/02	21:37:05	66.916	07/23/02	22:43:05	65.182	07/23/02	23:49:05	66.831
07/23/02	20:32:05	71.239	07/23/02	21:38:05	66.376	07/23/02	22:44:05	67.428	07/23/02	23:50:05	68.082
07/23/02	20:33:05	71.580	07/23/02	21:39:05	66.376	07/23/02	22:45:05	66.319	07/23/02	23:51:05	66.717
07/23/02	20:34:05	72.234	07/23/02	21:40:05	66.916	07/23/02	22:46:05	66.831	07/23/02	23:52:05	67.144
07/23/02	20:35:05	72.234	07/23/02	21:41:05	66.831	07/23/02	22:47:05	67.030	07/23/02	23:53:05	68.082
07/23/02	20:36:05	71.467	07/23/02	21:42:05	66.376	07/23/02	22:48:05	66.717	07/23/02	23:54:05	66.547
07/23/02	20:37:05	72.064	07/23/02	21:43:05	67.030	07/23/02	22:49:05	65.779	07/23/02	23:55:05	67.428
07/23/02	20:38:05	72.121	07/23/02	21:44:05	65.893	07/23/02	22:50:05	65.836	07/23/02	23:56:05	67.315
07/23/02	20:39:05	71.893	07/23/02	21:45:05	67.428	07/23/02	22:51:05	66.604	07/23/02	23:57:05	66.205
07/23/02	20:40:05	72.661	07/23/02	21:46:05	66.205	07/23/02	22:52:05	66.262	07/23/02	23:58:05	67.542
07/23/02	20:41:05	72.348	07/23/02	21:47:05	66.604	07/23/02	22:53:05	66.774	07/23/02	23:59:05	67.428
07/23/02	20:42:05	72.121	07/23/02	21:48:05	66.063	07/23/02	22:54:05	66.376	07/24/02	00:00:05	66.973
07/23/02	20:43:05	72.121	07/23/02	21:49:05	67.315	07/23/02	22:55:05	66.973	07/24/02	00:01:05	66.774
07/23/02	20:44:05	71.893	07/23/02	21:50:05	65.893	07/23/02	22:56:05	66.490	07/24/02	00:02:05	67.798
07/23/02	20:45:05	72.462	07/23/02	21:51:05	67.087	07/23/02	22:57:05	66.774	07/24/02	00:03:05	67.428
07/23/02	20:46:05	72.121	07/23/02	21:52:05	66.916	07/23/02	22:58:05	66.916	07/24/02	00:04:05	66.547
07/23/02	20:47:05	72.234	07/23/02	21:53:05	67.315	07/23/02	22:59:05	66.120	07/24/02	00:05:05	67.030
07/23/02	20:48:05	72.291	07/23/02	21:54:05	67.627	07/23/02	23:00:05	67.627	07/24/02	00:06:05	67.087
07/23/02	20:49:05	71.637	07/23/02	21:55:05	67.087	07/23/02	23:01:05	67.371	07/24/02	00:07:05	66.433
07/23/02	20:50:05	71.836	07/23/02	21:56:05	67.087	07/23/02	23:02:05	66.973	07/24/02	00:08:05	67.542
07/23/02	20:51:05	72.064	07/23/02	21:57:05	66.604	07/23/02	23:03:05	66.433	07/24/02	00:09:05	67.144
07/23/02	20:52:05	71.950	07/23/02	21:58:05	67.371	07/23/02	23:04:05	65.779	07/24/02	00:10:05	67.542
07/23/02	20:53:05	72.832	07/23/02	21:59:05	67.485	07/23/02	23:05:05	67.201	07/24/02	00:11:05	67.030
07/23/02	20:54:05	71.893	07/23/02	22:00:05	67.144	07/23/02	23:06:05	67.144	07/24/02	00:12:05	67.087
07/23/02	20:55:05	72.661	07/23/02	22:01:05	67.428	07/23/02	23:07:05	66.774	07/24/02	00:13:05	67.201
07/23/02	20:56:05	71.182	07/23/02	22:02:05	65.722	07/23/02	23:08:05	66.831	07/24/02	00:14:05	67.258
07/23/02	20:57:05	72.945	07/23/02	22:03:05	66.831	07/23/02	23:09:05	66.916	07/24/02	00:15:05	66.831
07/23/02	20:58:05	72.007	07/23/02	22:04:05	66.973	07/23/02	23:10:05	66.376	07/24/02	00:16:05	66.774
07/23/02	20:59:05	47.095	07/23/02	22:05:05	67.030	07/23/02	23:11:05	67.315	07/24/02	00:17:05	66.604
07/23/02	21:00:05	75.448	07/23/02	22:06:05	67.428	07/23/02	23:12:05	65.295	07/24/02	00:18:05	67.485
07/23/02	21:01:05	64.300	07/23/02	22:07:05	65.239	07/23/02	23:13:05	66.547	07/24/02	00:19:05	68.196
07/23/02	21:02:05	67.428	07/23/02	22:08:05	66.973	07/23/02	23:14:05	65.779	07/24/02	00:20:05	66.120
07/23/02	21:03:05	64.044	07/23/02	22:09:05	67.087	07/23/02	23:15:05	67.741	07/24/02	00:21:05	67.542
07/23/02	21:04:05	66.916	07/23/02	22:10:05	65.722	07/23/02	23:16:05	66.774	07/24/02	00:22:05	66.916
07/23/02	21:05:05	66.205	07/23/02	22:11:05	67.030	07/23/02	23:17:05	67.258	07/24/02	00:23:05	67.371
07/23/02	21:06:05	65.494	07/23/02	22:12:05	66.717	07/23/02	23:18:05	67.428	07/24/02	00:24:05	67.087
07/23/02	21:07:05	67.371	07/23/02	22:13:05	64.129	07/23/02	23:19:05	66.973	07/24/02	00:25:05	67.030
07/23/02	21:08:05	66.547	07/23/02	22:14:05	66.490	07/23/02	23:20:05	66.262	07/24/02	00:26:05	67.627
07/23/02	21:09:05	66.547	07/23/02	22:15:05	65.409	07/23/02	23:21:05	67.087	07/24/02	00:27:05	67.144
07/23/02	21:10:05	66.604	07/23/02	22:16:05	67.144	07/23/02	23:22:05	67.087	07/24/02	00:28:05	66.831
07/23/02	21:11:05	66.717	07/23/02	22:17:05	66.120	07/23/02	23:23:05	66.490	07/24/02	00:29:05	67.969
07/23/02	21:12:05	66.120	07/23/02	22:18:05	66.319	07/23/02	23:24:05	67.684	07/24/02	00:30:05	66.660
07/23/02	21:13:05	67.144	07/23/02	22:19:05	66.973	07/23/02	23:25:05	66.660	07/24/02	00:31:05	66.717
07/23/02	21:14:05	67.428	07/23/02	22:20:05	66.717	07/23/02	23:26:05	64.840	07/24/02	00:32:05	67.798
07/23/02	21:15:05	67.485	07/23/02	22:21:05	67.087	07/23/02	23:27:05	67.627	07/24/02	00:33:05	66.831
07/23/02	21:16:05	65.893	07/23/02	22:22:05	66.319	07/23/02	23:28:05	66.490	07/24/02	00:34:05	67.087
07/23/02	21:17:05	67.087	07/23/02	22:23:05	67.428	07/23/02	23:29:05	66.774	07/24/02	00:35:05	66.774
07/23/02	21:18:05	65.949	07/23/02	22:24:05	67.428	07/23/02	23:30:05	67.627	07/24/02	00:36:05	67.315
07/23/02	21:19:05	67.428	07/23/02	22:25:05	66.063	07/23/02	23:31:05	66.063	07/24/02	00:37:05	66.604
07/23/02	21:20:05	66.547	07/23/02	22:26:05	67.030	07/23/02	23:32:05	66.604	07/24/02	00:38:05	67.030

SCHULE AND CAMARO WAY - NO. 7288 cont.

Date	Time	Pres (PSI)	Date	Time	Pres (PSI)	Date	Time	Pres (PSI)	Date	Time	Pres (PSI)
07/24/02	00:39:05	66.831	07/24/02	01:45:05	68.082	07/24/02	02:51:05	67.798	07/24/02	03:57:05	67.798
07/24/02	00:40:05	66.660	07/24/02	01:46:05	68.253	07/24/02	02:52:05	67.542	07/24/02	03:58:05	67.371
07/24/02	00:41:05	67.315	07/24/02	01:47:05	68.452	07/24/02	02:53:05	68.509	07/24/02	03:59:05	67.627
07/24/02	00:42:05	66.205	07/24/02	01:48:05	67.912	07/24/02	02:54:05	67.741	07/24/02	04:00:05	68.139
07/24/02	00:43:05	67.030	07/24/02	01:49:05	67.969	07/24/02	02:55:05	67.684	07/24/02	04:01:05	67.201
07/24/02	00:44:05	66.376	07/24/02	01:50:05	67.912	07/24/02	02:56:05	67.627	07/24/02	04:02:05	67.258
07/24/02	00:45:05	68.082	07/24/02	01:51:05	67.684	07/24/02	02:57:05	67.627	07/24/02	04:03:05	68.139
07/24/02	00:46:05	66.973	07/24/02	01:52:05	67.912	07/24/02	02:58:05	68.509	07/24/02	04:04:05	68.082
07/24/02	00:47:05	67.542	07/24/02	01:53:05	68.338	07/24/02	02:59:05	67.969	07/24/02	04:05:05	67.855
07/24/02	00:48:05	66.376	07/24/02	01:54:05	67.542	07/24/02	03:00:05	67.912	07/24/02	04:06:05	68.139
07/24/02	00:49:05	67.144	07/24/02	01:55:05	68.196	07/24/02	03:01:05	67.855	07/24/02	04:07:05	67.485
07/24/02	00:50:05	66.319	07/24/02	01:56:05	65.836	07/24/02	03:02:05	68.566	07/24/02	04:08:05	67.627
07/24/02	00:51:05	68.026	07/24/02	01:57:05	69.049	07/24/02	03:03:05	67.258	07/24/02	04:09:05	67.428
07/24/02	00:52:05	65.551	07/24/02	01:58:05	67.428	07/24/02	03:04:05	67.855	07/24/02	04:10:05	68.196
07/24/02	00:53:05	67.741	07/24/02	01:59:05	67.684	07/24/02	03:05:05	67.855	07/24/02	04:11:05	67.741
07/24/02	00:54:05	67.030	07/24/02	02:00:05	68.196	07/24/02	03:06:05	67.684	07/24/02	04:12:05	67.798
07/24/02	00:55:05	69.618	07/24/02	02:01:05	67.315	07/24/02	03:07:05	67.315	07/24/02	04:13:05	67.371
07/24/02	00:56:05	64.897	07/24/02	02:02:05	67.428	07/24/02	03:08:05	68.026	07/24/02	04:14:05	67.798
07/24/02	00:57:05	68.253	07/24/02	02:03:05	68.196	07/24/02	03:09:05	67.741	07/24/02	04:15:05	67.912
07/24/02	00:58:05	67.627	07/24/02	02:04:05	67.144	07/24/02	03:10:05	67.428	07/24/02	04:16:05	67.912
07/24/02	00:59:05	67.912	07/24/02	02:05:05	67.542	07/24/02	03:11:05	69.106	07/24/02	04:17:05	68.253
07/24/02	01:00:05	68.196	07/24/02	02:06:05	68.395	07/24/02	03:12:05	66.973	07/24/02	04:18:05	67.684
07/24/02	01:01:05	67.315	07/24/02	02:07:05	66.831	07/24/02	03:13:05	68.253	07/24/02	04:19:05	67.741
07/24/02	01:02:05	68.253	07/24/02	02:08:05	68.338	07/24/02	03:14:05	67.201	07/24/02	04:20:05	67.912
07/24/02	01:03:05	67.144	07/24/02	02:09:05	67.542	07/24/02	03:15:05	67.855	07/24/02	04:21:05	67.912
07/24/02	01:04:05	68.623	07/24/02	02:10:05	67.542	07/24/02	03:16:05	67.741	07/24/02	04:22:05	67.912
07/24/02	01:05:05	67.969	07/24/02	02:11:05	67.798	07/24/02	03:17:05	68.452	07/24/02	04:23:05	67.485
07/24/02	01:06:05	66.973	07/24/02	02:12:05	68.196	07/24/02	03:18:05	67.485	07/24/02	04:24:05	69.106
07/24/02	01:07:05	68.026	07/24/02	02:13:05	67.258	07/24/02	03:19:05	67.912	07/24/02	04:25:05	67.485
07/24/02	01:08:05	67.741	07/24/02	02:14:05	68.338	07/24/02	03:20:05	68.253	07/24/02	04:26:05	68.395
07/24/02	01:09:05	68.139	07/24/02	02:15:05	67.371	07/24/02	03:21:05	67.969	07/24/02	04:27:05	67.144
07/24/02	01:10:05	68.196	07/24/02	02:16:05	68.082	07/24/02	03:22:05	67.627	07/24/02	04:28:05	67.969
07/24/02	01:11:05	67.627	07/24/02	02:17:05	67.855	07/24/02	03:23:05	68.082	07/24/02	04:29:05	67.428
07/24/02	01:12:05	67.684	07/24/02	02:18:05	67.741	07/24/02	03:24:05	68.338	07/24/02	04:30:05	67.855
07/24/02	01:13:05	67.912	07/24/02	02:19:05	67.542	07/24/02	03:25:05	67.485	07/24/02	04:31:05	68.253
07/24/02	01:14:05	67.912	07/24/02	02:20:05	67.485	07/24/02	03:26:05	68.395	07/24/02	04:32:05	67.855
07/24/02	01:15:05	67.315	07/24/02	02:21:05	67.912	07/24/02	03:27:05	68.196	07/24/02	04:33:05	67.798
07/24/02	01:16:05	67.684	07/24/02	02:22:05	68.338	07/24/02	03:28:05	67.144	07/24/02	04:34:05	68.082
07/24/02	01:17:05	67.798	07/24/02	02:23:05	68.452	07/24/02	03:29:05	67.855	07/24/02	04:35:05	67.542
07/24/02	01:18:05	67.371	07/24/02	02:24:05	67.741	07/24/02	03:30:05	67.684	07/24/02	04:36:05	68.082
07/24/02	01:19:05	67.428	07/24/02	02:25:05	68.082	07/24/02	03:31:05	67.627	07/24/02	04:37:05	67.855
07/24/02	01:20:05	68.196	07/24/02	02:26:05	67.258	07/24/02	03:32:05	67.485	07/24/02	04:38:05	68.196
07/24/02	01:21:05	68.082	07/24/02	02:27:05	67.855	07/24/02	03:33:05	68.082	07/24/02	04:39:05	67.201
07/24/02	01:22:05	66.604	07/24/02	02:28:05	67.485	07/24/02	03:34:05	67.969	07/24/02	04:40:05	68.395
07/24/02	01:23:05	68.850	07/24/02	02:29:05	67.684	07/24/02	03:35:05	67.258	07/24/02	04:41:05	68.026
07/24/02	01:24:05	67.144	07/24/02	02:30:05	68.509	07/24/02	03:36:05	68.680	07/24/02	04:42:05	67.798
07/24/02	01:25:05	68.509	07/24/02	02:31:05	67.855	07/24/02	03:37:05	68.026	07/24/02	04:43:05	68.026
07/24/02	01:26:05	67.855	07/24/02	02:32:05	68.082	07/24/02	03:38:05	67.315	07/24/02	04:44:05	68.253
07/24/02	01:27:05	67.798	07/24/02	02:33:05	67.684	07/24/02	03:39:05	67.969	07/24/02	04:45:05	67.542
07/24/02	01:28:05	68.395	07/24/02	02:34:05	67.741	07/24/02	03:40:05	67.741	07/24/02	04:46:05	67.798
07/24/02	01:29:05	67.969	07/24/02	02:35:05	68.026	07/24/02	03:41:05	67.684	07/24/02	04:47:05	68.395
07/24/02	01:30:05	67.542	07/24/02	02:36:05	67.741	07/24/02	03:42:05	67.684	07/24/02	04:48:05	67.201
07/24/02	01:31:05	68.026	07/24/02	02:37:05	67.087	07/24/02	03:43:05	68.395	07/24/02	04:49:05	68.395
07/24/02	01:32:05	67.912	07/24/02	02:38:05	68.850	07/24/02	03:44:05	67.315	07/24/02	04:50:05	68.338
07/24/02	01:33:05	68.026	07/24/02	02:39:05	67.855	07/24/02	03:45:05	68.395	07/24/02	04:51:05	68.082
07/24/02	01:34:05	67.969	07/24/02	02:40:05	67.684	07/24/02	03:46:05	66.433	07/24/02	04:52:05	67.741
07/24/02	01:35:05	67.542	07/24/02	02:41:05	67.912	07/24/02	03:47:05	67.912	07/24/02	04:53:05	67.855
07/24/02	01:36:05	69.675	07/24/02	02:42:05	67.969	07/24/02	03:48:05	67.741	07/24/02	04:54:05	67.087
07/24/02	01:37:05	66.973	07/24/02	02:43:05	67.087	07/24/02	03:49:05	67.485	07/24/02	04:55:05	67.741
07/24/02	01:38:05	68.509	07/24/02	02:44:05	68.253	07/24/02	03:50:05	68.082	07/24/02	04:56:05	68.452
07/24/02	01:39:05	67.428	07/24/02	02:45:05	67.371	07/24/02	03:51:05	68.082	07/24/02	04:57:05	68.253
07/24/02	01:40:05	67.798	07/24/02	02:46:05	68.196	07/24/02	03:52:05	67.741	07/24/02	04:58:05	68.026
07/24/02	01:41:05	67.969	07/24/02	02:47:05	67.542	07/24/02	03:53:05	67.684	07/24/02	04:59:05	68.082
07/24/02	01:42:05	67.741	07/24/02	02:48:05	67.969	07/24/02	03:54:05	67.485	07/24/02	05:00:05	67.627
07/24/02	01:43:05	68.026	07/24/02	02:49:05	67.485	07/24/02	03:55:05	68.680	07/24/02	05:01:05	68.082
07/24/02	01:44:05	67.741	07/24/02	02:50:05	68.082	07/24/02	03:56:05	67.428	07/24/02	05:02:05	67.627

SCHULE AND CAMARO WAY - NO. 7288 cont.

Date Time	Pres (PSI)	Date Time	Pres (PSI)	Date Time	Pres (PSI)	Date Time	Pres (PSI)
07/24/02 05:03:05	66.490	07/24/02 06:09:05	68.452	07/24/02 07:15:05	68.509	07/24/02 08:21:05	69.049
07/24/02 05:04:05	68.793	07/24/02 06:10:05	67.627	07/24/02 07:16:05	68.139	07/24/02 08:22:05	68.509
07/24/02 05:05:05	67.741	07/24/02 06:11:05	67.315	07/24/02 07:17:05	69.504	07/24/02 08:23:05	69.447
07/24/02 05:06:05	67.912	07/24/02 06:12:05	67.428	07/24/02 07:18:05	67.684	07/24/02 08:24:05	69.504
07/24/02 05:07:05	68.452	07/24/02 06:13:05	68.026	07/24/02 07:19:05	68.736	07/24/02 08:25:05	68.964
07/24/02 05:08:05	67.627	07/24/02 06:14:05	67.258	07/24/02 07:20:05	67.741	07/24/02 08:26:05	70.102
07/24/02 05:09:05	68.196	07/24/02 06:15:05	68.566	07/24/02 07:21:05	69.504	07/24/02 08:27:05	68.452
07/24/02 05:10:05	67.798	07/24/02 06:16:05	68.139	07/24/02 07:22:05	68.139	07/24/02 08:28:05	69.220
07/24/02 05:11:05	68.082	07/24/02 06:17:05	67.201	07/24/02 07:23:05	68.850	07/24/02 08:29:05	69.049
07/24/02 05:12:05	67.371	07/24/02 06:18:05	67.912	07/24/02 07:24:05	68.452	07/24/02 08:30:05	68.907
07/24/02 05:13:05	68.139	07/24/02 06:19:05	68.509	07/24/02 07:25:05	69.277	07/24/02 08:31:05	68.736
07/24/02 05:14:05	67.855	07/24/02 06:20:05	66.916	07/24/02 07:26:05	69.391	07/24/02 08:32:05	69.988
07/24/02 05:15:05	67.428	07/24/02 06:21:05	68.026	07/24/02 07:27:05	68.850	07/24/02 08:33:05	68.253
07/24/02 05:16:05	68.139	07/24/02 06:22:05	68.139	07/24/02 07:28:05	68.566	07/24/02 08:34:05	77.041
07/24/02 05:17:05	67.912	07/24/02 06:23:05	67.201	07/24/02 07:29:05	68.623	07/24/02 08:35:05	75.021
07/24/02 05:18:05	67.485	07/24/02 06:24:05	68.082	07/24/02 07:30:05	68.907	07/24/02 08:36:05	75.306
07/24/02 05:19:05	68.395	07/24/02 06:25:05	67.428	07/24/02 07:31:05	69.163	07/24/02 08:37:05	75.676
07/24/02 05:20:05	67.684	07/24/02 06:26:05	66.547	07/24/02 07:32:05	68.850	07/24/02 08:38:05	75.619
07/24/02 05:21:05	67.315	07/24/02 06:27:05	68.907	07/24/02 07:33:05	68.395	07/24/02 08:39:05	75.078
07/24/02 05:22:05	67.855	07/24/02 06:28:05	67.798	07/24/02 07:34:05	69.220	07/24/02 08:40:05	75.135
07/24/02 05:23:05	67.855	07/24/02 06:29:05	68.509	07/24/02 07:35:05	68.736	07/24/02 08:41:05	75.676
07/24/02 05:24:05	68.026	07/24/02 06:30:05	67.428	07/24/02 07:36:05	68.253	07/24/02 08:42:05	75.562
07/24/02 05:25:05	67.684	07/24/02 06:31:05	68.964	07/24/02 07:37:05	68.452	07/24/02 08:43:05	75.135
07/24/02 05:26:05	67.969	07/24/02 06:32:05	67.969	07/24/02 07:38:05	68.736	07/24/02 08:44:05	76.017
07/24/02 05:27:05	68.139	07/24/02 06:33:05	67.798	07/24/02 07:39:05	68.196	07/24/02 08:45:05	75.135
07/24/02 05:28:05	67.201	07/24/02 06:34:05	67.315	07/24/02 07:40:05	68.793	07/24/02 08:46:05	75.192
07/24/02 05:29:05	68.509	07/24/02 06:35:05	67.969	07/24/02 07:41:05	68.736	07/24/02 08:47:05	75.192
07/24/02 05:30:05	68.139	07/24/02 06:36:05	68.082	07/24/02 07:42:05	68.907	07/24/02 08:48:05	75.960
07/24/02 05:31:05	67.542	07/24/02 06:37:05	68.082	07/24/02 07:43:05	68.850	07/24/02 08:49:05	74.481
07/24/02 05:32:05	68.139	07/24/02 06:38:05	74.367	07/24/02 07:44:05	69.049	07/24/02 08:50:05	75.846
07/24/02 05:33:05	68.338	07/24/02 06:39:05	66.774	07/24/02 07:45:05	69.817	07/24/02 08:51:05	75.505
07/24/02 05:34:05	66.547	07/24/02 06:40:05	68.566	07/24/02 07:46:05	69.391	07/24/02 08:52:05	75.789
07/24/02 05:35:05	68.509	07/24/02 06:41:05	69.817	07/24/02 07:47:05	68.623	07/24/02 08:53:05	75.192
07/24/02 05:36:05	67.798	07/24/02 06:42:05	68.623	07/24/02 07:48:05	69.106	07/24/02 08:54:05	75.078
07/24/02 05:37:05	67.315	07/24/02 06:43:05	69.391	07/24/02 07:49:05	68.452	07/24/02 08:55:05	75.078
07/24/02 05:38:05	68.680	07/24/02 06:44:05	68.907	07/24/02 07:50:05	69.334	07/24/02 08:56:05	75.732
07/24/02 05:39:05	67.087	07/24/02 06:45:05	69.106	07/24/02 07:51:05	68.566	07/24/02 08:57:05	75.391
07/24/02 05:40:05	68.452	07/24/02 06:46:05	69.334	07/24/02 07:52:05	68.680	07/24/02 08:58:05	75.448
07/24/02 05:41:05	67.627	07/24/02 06:47:05	68.850	07/24/02 07:53:05	69.334	07/24/02 08:59:05	74.908
07/24/02 05:42:05	68.082	07/24/02 06:48:05	69.504	07/24/02 07:54:05	68.395	07/24/02 09:00:05	74.538
07/24/02 05:43:05	68.026	07/24/02 06:49:05	68.509	07/24/02 07:55:05	69.874	07/24/02 09:01:05	74.851
07/24/02 05:44:05	68.026	07/24/02 06:50:05	69.561	07/24/02 07:56:05	68.907	07/24/02 09:02:05	74.908
07/24/02 05:45:05	68.026	07/24/02 06:51:05	68.566	07/24/02 07:57:05	69.220	07/24/02 09:03:05	74.737
07/24/02 05:46:05	67.485	07/24/02 06:52:05	68.736	07/24/02 07:58:05	69.106	07/24/02 09:04:05	74.310
07/24/02 05:47:05	68.395	07/24/02 06:53:05	69.049	07/24/02 07:59:05	69.675	07/24/02 09:05:05	74.595
07/24/02 05:48:05	67.912	07/24/02 06:54:05	68.907	07/24/02 08:00:05	69.049	07/24/02 09:06:05	74.908
07/24/02 05:49:05	68.026	07/24/02 06:55:05	68.793	07/24/02 08:01:05	68.680	07/24/02 09:07:05	75.306
07/24/02 05:50:05	67.542	07/24/02 06:56:05	69.220	07/24/02 08:02:05	67.855	07/24/02 09:08:05	75.249
07/24/02 05:51:05	67.542	07/24/02 06:57:05	69.277	07/24/02 08:03:05	68.907	07/24/02 09:09:05	74.851
07/24/02 05:52:05	68.566	07/24/02 06:58:05	69.675	07/24/02 08:04:05	68.793	07/24/02 09:10:05	74.794
07/24/02 05:53:05	67.969	07/24/02 06:59:05	68.139	07/24/02 08:05:05	69.447	07/24/02 09:11:05	75.078
07/24/02 05:54:05	67.912	07/24/02 07:00:05	69.334	07/24/02 08:06:05	69.049	07/24/02 09:12:05	74.794
07/24/02 05:55:05	68.082	07/24/02 07:01:05	68.680	07/24/02 08:07:05	68.623	07/24/02 09:13:05	74.140
07/24/02 05:56:05	68.395	07/24/02 07:02:05	68.680	07/24/02 08:08:05	68.509	07/24/02 09:14:05	75.789
07/24/02 05:57:05	68.026	07/24/02 07:03:05	68.623	07/24/02 08:09:05	69.504	07/24/02 09:15:05	74.794
07/24/02 05:58:05	67.969	07/24/02 07:04:05	68.026	07/24/02 08:10:05	68.253	07/24/02 09:16:05	75.391
07/24/02 05:59:05	67.684	07/24/02 07:05:05	69.106	07/24/02 08:11:05	69.931	07/24/02 09:17:05	75.078
07/24/02 06:00:05	67.969	07/24/02 07:06:05	69.561	07/24/02 08:12:05	68.793	07/24/02 09:18:05	75.021
07/24/02 06:01:05	67.798	07/24/02 07:07:05	69.277	07/24/02 08:13:05	68.850	07/24/02 09:19:05	74.737
07/24/02 06:02:05	68.452	07/24/02 07:08:05	68.680	07/24/02 08:14:05	69.504	07/24/02 09:20:05	75.021
07/24/02 06:03:05	68.196	07/24/02 07:09:05	68.850	07/24/02 08:15:05	69.049	07/24/02 09:21:05	74.794
07/24/02 06:04:05	67.969	07/24/02 07:10:05	68.680	07/24/02 08:16:05	69.874	07/24/02 09:22:05	75.135
07/24/02 06:05:05	68.026	07/24/02 07:11:05	68.736	07/24/02 08:17:05	68.566	07/24/02 09:23:05	75.135
07/24/02 06:06:05	67.371	07/24/02 07:12:05	68.736	07/24/02 08:18:05	69.106	07/24/02 09:24:05	74.851
07/24/02 06:07:05	68.680	07/24/02 07:13:05	69.561	07/24/02 08:19:05	69.931	07/24/02 09:25:05	74.737
07/24/02 06:08:05	67.315	07/24/02 07:14:05	69.106	07/24/02 08:20:05	69.277	07/24/02 09:26:05	75.135

SCHULE AND CAMARO WAY - NO. 7288 cont.

Date	Time	Pres (PSI)	Date	Time	Pres (PSI)	Date	Time	Pres (PSI)	Date	Time	Pres (PSI)
07/24/02	09:27:05	75.306	07/24/02	10:33:05	77.638	07/24/02	11:39:05	66.717	07/24/02	12:45:05	66.916
07/24/02	09:28:05	75.192	07/24/02	10:34:05	64.528	07/24/02	11:40:05	67.428	07/24/02	12:46:05	66.433
07/24/02	09:29:05	75.562	07/24/02	10:35:05	68.566	07/24/02	11:41:05	67.087	07/24/02	12:47:05	66.547
07/24/02	09:30:05	74.794	07/24/02	10:36:05	68.850	07/24/02	11:42:05	68.338	07/24/02	12:48:05	65.949
07/24/02	09:31:05	74.794	07/24/02	10:37:05	68.964	07/24/02	11:43:05	67.969	07/24/02	12:49:05	66.660
07/24/02	09:32:05	74.851	07/24/02	10:38:05	68.850	07/24/02	11:44:05	67.087	07/24/02	12:50:05	67.315
07/24/02	09:33:05	75.249	07/24/02	10:39:05	68.139	07/24/02	11:45:05	66.717	07/24/02	12:51:05	66.490
07/24/02	09:34:05	74.908	07/24/02	10:40:05	68.964	07/24/02	11:46:05	68.395	07/24/02	12:52:05	66.717
07/24/02	09:35:05	74.680	07/24/02	10:41:05	68.026	07/24/02	11:47:05	66.916	07/24/02	12:53:05	66.973
07/24/02	09:36:05	75.192	07/24/02	10:42:05	68.082	07/24/02	11:48:05	68.139	07/24/02	12:54:05	66.319
07/24/02	09:37:05	75.249	07/24/02	10:43:05	69.049	07/24/02	11:49:05	68.338	07/24/02	12:55:05	67.144
07/24/02	09:38:05	75.021	07/24/02	10:44:05	68.509	07/24/02	11:50:05	66.604	07/24/02	12:56:05	66.774
07/24/02	09:39:05	75.249	07/24/02	10:45:05	67.798	07/24/02	11:51:05	68.026	07/24/02	12:57:05	66.490
07/24/02	09:40:05	75.306	07/24/02	10:46:05	69.220	07/24/02	11:52:05	67.485	07/24/02	12:58:05	67.258
07/24/02	09:41:05	75.448	07/24/02	10:47:05	67.371	07/24/02	11:53:05	67.201	07/24/02	12:59:05	65.893
07/24/02	09:42:05	75.249	07/24/02	10:48:05	68.793	07/24/02	11:54:05	68.026	07/24/02	13:00:05	66.973
07/24/02	09:43:05	75.021	07/24/02	10:49:05	68.026	07/24/02	11:55:05	66.831	07/24/02	13:01:05	65.722
07/24/02	09:44:05	75.448	07/24/02	10:50:05	68.566	07/24/02	11:56:05	67.912	07/24/02	13:02:05	67.969
07/24/02	09:45:05	74.908	07/24/02	10:51:05	69.049	07/24/02	11:57:05	67.428	07/24/02	13:03:05	65.836
07/24/02	09:46:05	75.192	07/24/02	10:52:05	66.916	07/24/02	11:58:05	67.315	07/24/02	13:04:05	65.722
07/24/02	09:47:05	74.851	07/24/02	10:53:05	68.196	07/24/02	11:59:05	66.490	07/24/02	13:05:05	68.026
07/24/02	09:48:05	74.595	07/24/02	10:54:05	68.253	07/24/02	12:00:05	66.774	07/24/02	13:06:05	66.547
07/24/02	09:49:05	75.078	07/24/02	10:55:05	68.139	07/24/02	12:01:05	67.627	07/24/02	13:07:05	66.319
07/24/02	09:50:05	75.505	07/24/02	10:56:05	68.395	07/24/02	12:02:05	68.026	07/24/02	13:08:05	67.485
07/24/02	09:51:05	75.619	07/24/02	10:57:05	68.509	07/24/02	12:03:05	67.087	07/24/02	13:09:05	66.376
07/24/02	09:52:05	75.021	07/24/02	10:58:05	67.485	07/24/02	12:04:05	67.030	07/24/02	13:10:05	66.604
07/24/02	09:53:05	75.306	07/24/02	10:59:05	68.253	07/24/02	12:05:05	67.315	07/24/02	13:11:05	66.006
07/24/02	09:54:05	74.680	07/24/02	11:00:05	67.798	07/24/02	12:06:05	67.201	07/24/02	13:12:05	66.490
07/24/02	09:55:05	74.254	07/24/02	11:01:05	68.680	07/24/02	12:07:05	67.030	07/24/02	13:13:05	65.949
07/24/02	09:56:05	75.676	07/24/02	11:02:05	66.973	07/24/02	12:08:05	67.627	07/24/02	13:14:05	66.660
07/24/02	09:57:05	75.306	07/24/02	11:03:05	59.665	07/24/02	12:09:05	67.371	07/24/02	13:15:05	66.205
07/24/02	09:58:05	75.789	07/24/02	11:04:05	72.661	07/24/02	12:10:05	67.684	07/24/02	13:16:05	66.831
07/24/02	09:59:05	76.017	07/24/02	11:05:05	67.627	07/24/02	12:11:05	67.258	07/24/02	13:17:05	65.949
07/24/02	10:00:05	75.619	07/24/02	11:06:05	67.798	07/24/02	12:12:05	67.684	07/24/02	13:18:05	66.262
07/24/02	10:01:05	75.676	07/24/02	11:07:05	68.026	07/24/02	12:13:05	66.604	07/24/02	13:19:05	66.831
07/24/02	10:02:05	75.676	07/24/02	11:08:05	67.315	07/24/02	12:14:05	66.262	07/24/02	13:20:05	65.779
07/24/02	10:03:05	75.306	07/24/02	11:09:05	68.338	07/24/02	12:15:05	67.030	07/24/02	13:21:05	65.125
07/24/02	10:04:05	76.017	07/24/02	11:10:05	68.139	07/24/02	12:16:05	67.258	07/24/02	13:22:05	67.741
07/24/02	10:05:05	75.789	07/24/02	11:11:05	68.253	07/24/02	12:17:05	67.371	07/24/02	13:23:05	65.494
07/24/02	10:06:05	75.960	07/24/02	11:12:05	67.542	07/24/02	12:18:05	67.371	07/24/02	13:24:05	66.063
07/24/02	10:07:05	75.391	07/24/02	11:13:05	67.912	07/24/02	12:19:05	66.120	07/24/02	13:25:05	65.551
07/24/02	10:08:05	75.306	07/24/02	11:14:05	67.428	07/24/02	12:20:05	67.912	07/24/02	13:26:05	66.433
07/24/02	10:09:05	75.192	07/24/02	11:15:05	66.774	07/24/02	12:21:05	66.376	07/24/02	13:27:05	65.836
07/24/02	10:10:05	76.102	07/24/02	11:16:05	67.485	07/24/02	12:22:05	67.144	07/24/02	13:28:05	67.201
07/24/02	10:11:05	75.846	07/24/02	11:17:05	67.315	07/24/02	12:23:05	66.490	07/24/02	13:29:05	66.319
07/24/02	10:12:05	75.562	07/24/02	11:18:05	67.485	07/24/02	12:24:05	66.660	07/24/02	13:30:05	65.779
07/24/02	10:13:05	75.960	07/24/02	11:19:05	67.201	07/24/02	12:25:05	66.774	07/24/02	13:31:05	66.433
07/24/02	10:14:05	75.192	07/24/02	11:20:05	67.258	07/24/02	12:26:05	67.315	07/24/02	13:32:05	65.352
07/24/02	10:15:05	75.448	07/24/02	11:21:05	68.196	07/24/02	12:27:05	66.916	07/24/02	13:33:05	66.205
07/24/02	10:16:05	75.789	07/24/02	11:22:05	68.082	07/24/02	12:28:05	66.774	07/24/02	13:34:05	66.120
07/24/02	10:17:05	74.680	07/24/02	11:23:05	67.485	07/24/02	12:29:05	66.006	07/24/02	13:35:05	65.295
07/24/02	10:18:05	75.960	07/24/02	11:24:05	67.315	07/24/02	12:30:05	67.144	07/24/02	13:36:05	66.547
07/24/02	10:19:05	75.391	07/24/02	11:25:05	66.319	07/24/02	12:31:05	66.717	07/24/02	13:37:05	65.722
07/24/02	10:20:05	75.249	07/24/02	11:26:05	67.087	07/24/02	12:32:05	67.201	07/24/02	13:38:05	65.949
07/24/02	10:21:05	76.102	07/24/02	11:27:05	67.030	07/24/02	12:33:05	66.831	07/24/02	13:39:05	65.409
07/24/02	10:22:05	75.135	07/24/02	11:28:05	67.315	07/24/02	12:34:05	67.201	07/24/02	13:40:05	66.205
07/24/02	10:23:05	75.391	07/24/02	11:29:05	67.542	07/24/02	12:35:05	67.258	07/24/02	13:41:05	65.608
07/24/02	10:24:05	75.505	07/24/02	11:30:05	66.063	07/24/02	12:36:05	67.258	07/24/02	13:42:05	65.125
07/24/02	10:25:05	76.159	07/24/02	11:31:05	67.684	07/24/02	12:37:05	66.916	07/24/02	13:43:05	65.779
07/24/02	10:26:05	75.306	07/24/02	11:32:05	67.485	07/24/02	12:38:05	66.063	07/24/02	13:44:05	65.665
07/24/02	10:27:05	76.017	07/24/02	11:33:05	68.026	07/24/02	12:39:05	66.547	07/24/02	13:45:05	65.182
07/24/02	10:28:05	75.676	07/24/02	11:34:05	67.684	07/24/02	12:40:05	66.120	07/24/02	13:46:05	65.494
07/24/02	10:29:05	75.078	07/24/02	11:35:05	67.969	07/24/02	12:41:05	66.660	07/24/02	13:47:05	66.262
07/24/02	10:30:05	75.135	07/24/02	11:36:05	66.376	07/24/02	12:42:05	67.315	07/24/02	13:48:05	65.551
07/24/02	10:31:05	75.192	07/24/02	11:37:05	67.684	07/24/02	12:43:05	67.258	07/24/02	13:49:05	65.779
07/24/02	10:32:05	57.844	07/24/02	11:38:05	67.542	07/24/02	12:44:05	66.660	07/24/02	13:50:05	65.779

SCHULE AND CAMARO WAY - NO. 7288 cont.

Date	Time	Pres (PSI)
07/24/02	13:51:05	65.182
07/24/02	13:52:05	66.490
07/24/02	13:53:05	65.551
07/24/02	13:54:05	66.376
07/24/02	13:55:05	64.641
07/24/02	13:56:05	66.120
07/24/02	13:57:05	65.779
07/24/02	13:58:05	65.608
07/24/02	13:59:05	65.665
07/24/02	14:00:05	65.608
07/24/02	14:01:05	65.551
07/24/02	14:02:05	66.006
07/24/02	14:03:05	66.120
07/24/02	14:04:05	64.414
07/24/02	14:05:05	65.722
07/24/02	14:06:05	65.494
07/24/02	14:07:05	65.779
07/24/02	14:08:05	64.641
07/24/02	14:09:05	66.262
07/24/02	14:10:05	64.954
07/24/02	14:11:05	65.182
07/24/02	14:12:05	65.011
07/24/02	14:13:05	65.836
07/24/02	14:14:05	65.182
07/24/02	14:15:05	65.836
07/24/02	14:16:05	64.755
07/24/02	14:17:05	66.604
07/24/02	14:18:05	63.930
07/24/02	14:19:05	65.608
07/24/02	14:20:05	66.006
07/24/02	14:21:05	65.836
07/24/02	14:22:05	65.551
07/24/02	14:23:05	72.661
07/24/02	14:24:05	66.433
07/24/02	14:25:05	66.063
07/24/02	14:26:05	67.087
07/24/02	14:27:05	66.319
07/24/02	14:28:05	67.144
07/24/02	14:29:05	67.684
07/24/02	14:30:05	67.741
07/24/02	14:31:05	66.262
07/24/02	14:32:05	66.831
07/24/02	14:33:05	67.371
07/24/02	14:34:05	68.026
07/24/02	14:35:05	66.604
07/24/02	14:36:05	66.831
07/24/02	14:37:05	66.376
07/24/02	14:38:05	68.026
07/24/02	14:39:05	66.774
07/24/02	14:40:05	66.319
07/24/02	14:41:05	68.082
07/24/02	14:42:05	67.258
07/24/02	14:43:05	67.428
07/24/02	14:44:05	66.376
07/24/02	14:45:05	67.912
07/24/02	14:46:05	67.485
07/24/02	14:47:05	66.774
07/24/02	14:48:05	67.912
07/24/02	14:49:05	66.660
07/24/02	14:50:05	67.684
07/24/02	14:51:05	67.144
07/24/02	14:52:05	0.455
07/24/02	14:53:05	0.455
07/24/02	14:54:05	0.512
07/24/02	14:55:05	0.569
07/24/02	14:56:05	0.569
07/24/02	14:57:05	0.626
07/24/02	14:58:05	0.569
07/24/02	14:59:05	0.626
07/24/02	15:00:05	0.711
07/24/02	15:01:05	0.626
07/24/02	15:02:05	0.626
07/24/02	15:03:05	0.626
07/24/02	15:04:05	0.711
07/24/02	15:05:05	0.626
07/24/02	15:06:05	0.711
07/24/02	15:07:05	0.711
07/24/02	15:08:05	0.711
07/24/02	15:09:05	0.711
07/24/02	15:10:05	0.711
07/24/02	15:11:05	0.711
07/24/02	15:12:05	0.711
07/24/02	15:13:05	0.711
07/24/02	15:14:05	0.626
07/24/02	15:15:05	0.626
07/24/02	15:16:05	0.711
07/24/02	15:17:05	0.626
07/24/02	15:18:05	0.626
07/24/02	15:19:05	0.626
07/24/02	15:20:05	0.626
07/24/02	15:21:05	0.569
07/24/02	15:22:05	0.626
07/24/02	15:23:05	0.626
07/24/02	15:24:05	0.512
07/24/02	15:25:05	0.569
07/24/02	15:26:05	0.512
07/24/02	15:27:05	0.569
07/24/02	15:28:05	0.569
07/24/02	15:29:05	0.512
07/24/02	15:30:05	0.512
07/24/02	15:31:05	0.512
07/24/02	15:32:05	0.512
07/24/02	15:33:05	0.512
07/24/02	15:34:05	0.512
07/24/02	15:35:05	0.512
07/24/02	15:36:05	0.512
07/24/02	15:37:05	0.512
07/24/02	15:38:05	0.455
07/24/02	15:39:05	0.455
07/24/02	15:40:05	0.512
07/24/02	15:41:05	0.455
07/24/02	15:42:05	0.455
07/24/02	15:43:05	0.455
07/24/02	15:44:05	0.455
07/24/02	15:45:05	0.455
07/24/02	15:46:05	0.455
07/24/02	15:47:05	0.455
07/24/02	15:48:05	0.455
07/24/02	15:49:05	0.455
07/24/02	15:50:05	0.398
07/24/02	15:51:05	0.398
07/24/02	15:52:05	0.398
07/24/02	15:53:05	0.398
07/24/02	15:54:05	0.455
07/24/02	15:55:05	0.398
07/24/02	15:56:05	0.398
07/24/02	15:57:05	0.398
07/24/02	15:58:05	0.398
07/24/02	15:59:05	0.398
07/24/02	16:00:05	0.455
07/24/02	16:01:05	0.398
07/24/02	16:02:05	0.455
07/24/02	16:03:05	0.398
07/24/02	16:04:05	0.455
07/24/02	16:05:05	0.455
07/24/02	16:06:05	0.455
07/24/02	16:07:05	0.398
07/24/02	16:08:05	0.455
07/24/02	16:09:05	0.455
07/24/02	16:10:05	0.455
07/24/02	16:11:05	0.455
07/24/02	16:12:05	0.455
07/24/02	16:13:05	0.455
07/24/02	16:14:05	0.455
07/24/02	16:15:05	0.455
07/24/02	16:16:05	0.512
07/24/02	16:17:05	0.512
07/24/02	16:18:05	0.512
07/24/02	16:19:05	0.512
07/24/02	16:20:05	0.512
07/24/02	16:21:05	0.512
07/24/02	16:22:05	0.512
07/24/02	16:23:05	0.512
07/24/02	16:24:05	0.512
07/24/02	16:25:05	0.512
07/24/02	16:26:05	0.512
07/24/02	16:27:05	0.512
07/24/02	16:28:05	0.512
07/24/02	16:29:05	0.569
07/24/02	16:30:05	0.512
07/24/02	16:31:05	0.512
07/24/02	16:32:05	0.569
07/24/02	16:33:05	0.569
07/24/02	16:34:05	0.569

SUMMIT RIDGE AND STAGECOACH - NO. 7488

Date	Time	Pres (PSI)	Date	Time	Pres (PSI)	Date	Time	Pres (PSI)	Date	Time	Pres (PSI)
07/31/02	16:07:01	0.000	07/31/02	16:23:31	50.820	07/31/02	16:40:01	53.380			
07/31/02	16:07:16	0.000	07/31/02	16:23:46	50.649	07/31/02	16:40:16	53.124			
07/31/02	16:07:31	0.000	07/31/02	16:24:01	50.280	07/31/02	16:40:31	53.038			
07/31/02	16:07:46	0.000	07/31/02	16:24:16	50.536	07/31/02	16:40:46	53.124			
07/31/02	16:08:01	0.000	07/31/02	16:24:31	50.450	07/31/02	16:41:01	53.749			
07/31/02	16:08:16	0.000	07/31/02	16:24:46	50.905	07/31/02	16:41:16	52.953			
07/31/02	16:08:31	0.000	07/31/02	16:25:01	50.450	07/31/02	16:41:31	53.124			
07/31/02	16:08:46	0.000	07/31/02	16:25:16	50.536	07/31/02	16:41:46	53.038			
07/31/02	16:09:01	25.453	07/31/02	16:25:31	50.450	07/31/02	16:42:01	53.380			
07/31/02	16:09:16	54.005	07/31/02	16:25:46	50.735	07/31/02	16:42:16	53.579			
07/31/02	16:09:31	55.882	07/31/02	16:26:01	49.938	07/31/02	16:42:31	53.294			
07/31/02	16:09:46	55.257	07/31/02	16:26:16	50.991	07/31/02	16:42:46	53.579			
07/31/02	16:10:01	55.967	07/31/02	16:26:31	50.109	07/31/02	16:43:01	53.294			
07/31/02	16:10:16	55.342	07/31/02	16:26:46	50.820	07/31/02	16:43:16	53.749			
07/31/02	16:10:31	55.427	07/31/02	16:27:01	50.024	07/31/02	16:43:31	53.465			
07/31/02	16:10:46	55.086	07/31/02	16:27:16	50.280	07/31/02	16:43:46	53.124			
07/31/02	16:11:01	54.887	07/31/02	16:27:31	49.569	07/31/02	16:44:01	53.579			
07/31/02	16:11:16	55.683	07/31/02	16:27:46	50.280	07/31/02	16:44:16	53.209			
07/31/02	16:11:31	54.972	07/31/02	16:28:01	49.853	07/31/02	16:44:31	53.920			
07/31/02	16:11:46	55.342	07/31/02	16:28:16	50.365	07/31/02	16:44:46	53.294			
07/31/02	16:12:01	55.257	07/31/02	16:28:31	49.739	07/31/02	16:45:01	53.920			
07/31/02	16:12:16	55.257	07/31/02	16:28:46	49.654	07/31/02	16:45:16	52.953			
07/31/02	16:12:31	54.176	07/31/02	16:29:01	49.938	07/31/02	16:45:31	30.145			
07/31/02	16:12:46	55.797	07/31/02	16:29:16	50.194	07/31/02	16:45:46	28.979			
07/31/02	16:13:01	55.086	07/31/02	16:29:31	49.483	07/31/02	16:46:01	28.894			
07/31/02	16:13:16	55.598	07/31/02	16:29:46	49.313	07/31/02	16:46:16	-0.085			
07/31/02	16:13:31	54.546	07/31/02	16:30:01	49.313	07/31/02	16:46:31	-0.085			
07/31/02	16:13:46	55.257	07/31/02	16:30:16	49.654	07/31/02	16:46:46	-0.085			
07/31/02	16:14:01	54.716	07/31/02	16:30:31	48.943	07/31/02	16:47:01	0.000			
07/31/02	16:14:16	54.091	07/31/02	16:30:46	49.483	07/31/02	16:47:16	0.000			
07/31/02	16:14:31	55.598	07/31/02	16:31:01	49.853	07/31/02	16:47:31	-0.085			
07/31/02	16:14:46	54.716	07/31/02	16:31:16	49.654	07/31/02	16:47:46	-0.085			
07/31/02	16:15:01	55.512	07/31/02	16:31:31	49.398	07/31/02	16:48:01	-0.085			
07/31/02	16:15:16	54.972	07/31/02	16:31:46	49.483	07/31/02	16:48:16	-0.085			
07/31/02	16:15:31	55.171	07/31/02	16:32:01	49.654	07/31/02	16:48:31	-0.085			
07/31/02	16:15:46	54.375	07/31/02	16:32:16	48.772	07/31/02	16:48:46	-0.085			
07/31/02	16:16:01	54.801	07/31/02	16:32:31	49.569	07/31/02	16:49:01	-0.085			
07/31/02	16:16:16	54.375	07/31/02	16:32:46	49.398	07/31/02	16:49:16	0.000			
07/31/02	16:16:31	55.967	07/31/02	16:33:01	49.227	07/31/02	16:49:31	0.000			
07/31/02	16:16:46	54.091	07/31/02	16:33:16	48.772	07/31/02	16:49:46	0.000			
07/31/02	16:17:01	54.801	07/31/02	16:33:31	49.142	07/31/02	16:50:01	-0.085			
07/31/02	16:17:16	54.176	07/31/02	16:33:46	49.028	07/31/02	16:50:16	0.000			
07/31/02	16:17:31	54.887	07/31/02	16:34:01	49.739	07/31/02	16:50:31	-0.085			
07/31/02	16:17:46	54.801	07/31/02	16:34:16	51.161	07/31/02	16:50:46	-0.085			
07/31/02	16:18:01	55.512	07/31/02	16:34:31	51.360	07/31/02	16:51:01	-0.085			
07/31/02	16:18:16	54.801	07/31/02	16:34:46	52.413	07/31/02	16:51:16	-0.085			
07/31/02	16:18:31	54.716	07/31/02	16:35:01	52.669	07/31/02	16:51:31	-0.085			
07/31/02	16:18:46	54.631	07/31/02	16:35:16	52.953	07/31/02	16:51:46	-0.085			
07/31/02	16:19:01	54.972	07/31/02	16:35:31	53.038	07/31/02	16:52:01	-0.085			
07/31/02	16:19:16	54.460	07/31/02	16:35:46	54.716	07/31/02	16:52:16	0.000			
07/31/02	16:19:31	54.091	07/31/02	16:36:01	53.749	07/31/02	16:52:31	-0.085			
07/31/02	16:19:46	55.342	07/31/02	16:36:16	52.242	07/31/02	16:52:46	-0.085			
07/31/02	16:20:01	54.631	07/31/02	16:36:31	53.209	07/31/02	16:53:01	-0.085			
07/31/02	16:20:16	54.887	07/31/02	16:36:46	52.242	07/31/02	16:53:16	-0.085			
07/31/02	16:20:31	42.573	07/31/02	16:37:01	52.953	07/31/02	16:53:31	-0.085			
07/31/02	16:20:46	53.465	07/31/02	16:37:16	53.209	07/31/02	16:53:46	-0.085			
07/31/02	16:21:01	46.810	07/31/02	16:37:31	52.953	07/31/02	16:54:01	0.000			
07/31/02	16:21:16	53.038	07/31/02	16:37:46	52.754	07/31/02	16:54:16	-0.085			
07/31/02	16:21:31	50.450	07/31/02	16:38:01	52.868	07/31/02	16:54:31	0.000			
07/31/02	16:21:46	52.157	07/31/02	16:38:16	53.124	07/31/02	16:54:46	0.000			
07/31/02	16:22:01	49.938	07/31/02	16:38:31	53.038	07/31/02	16:55:01	0.000			
07/31/02	16:22:16	51.161	07/31/02	16:38:46	52.754	07/31/02	16:55:16	-0.085			
07/31/02	16:22:31	50.649	07/31/02	16:39:01	53.209	07/31/02	16:55:31	1.138			
07/31/02	16:22:46	50.735	07/31/02	16:39:16	53.294	07/31/02	16:55:46	1.138			
07/31/02	16:23:01	51.161	07/31/02	16:39:31	53.038						
07/31/02	16:23:16	50.649	07/31/02	16:39:46	53.124						

WEST AND UHLAND - NO. 7565

Date	Time	Pres (PSI)
07/22/02	14:14:03	-0.398
07/22/02	14:15:03	-0.455
07/22/02	14:16:03	-0.455
07/22/02	14:17:03	-0.398
07/22/02	14:18:03	-0.512
07/22/02	14:19:03	-0.455
07/22/02	14:20:03	-0.455
07/22/02	14:21:03	-0.455
07/22/02	14:22:03	-0.512
07/22/02	14:23:03	-0.512
07/22/02	14:24:03	-0.455
07/22/02	14:25:03	-0.455
07/22/02	14:26:03	-0.512
07/22/02	14:27:03	-0.455
07/22/02	14:28:03	-0.455
07/22/02	14:29:03	-0.512
07/22/02	14:30:03	-0.455
07/22/02	14:31:03	-0.512
07/22/02	14:32:03	-0.512
07/22/02	14:33:03	-0.512
07/22/02	14:34:03	-0.512
07/22/02	14:35:03	-0.455
07/22/02	14:36:03	-0.512
07/22/02	14:37:03	-0.455
07/22/02	14:38:03	-0.455
07/22/02	14:39:03	-0.455
07/22/02	14:40:03	-0.455
07/22/02	14:41:03	-0.512
07/22/02	14:42:03	-0.455
07/22/02	14:43:03	-0.455
07/22/02	14:44:03	-0.512
07/22/02	14:45:03	-0.512
07/22/02	14:46:03	-0.512
07/22/02	14:47:03	-0.512
07/22/02	14:48:03	-0.455
07/22/02	14:49:03	-0.512
07/22/02	14:50:03	-0.455
07/22/02	14:51:03	-0.512
07/22/02	14:52:03	-0.455
07/22/02	14:53:03	-0.455
07/22/02	14:54:03	-0.455
07/22/02	14:55:03	-0.455
07/22/02	14:56:03	-0.455
07/22/02	14:57:03	-0.455
07/22/02	14:58:03	-0.455
07/22/02	14:59:03	-0.455
07/22/02	15:00:03	-0.455
07/22/02	15:01:03	-0.455
07/22/02	15:02:03	-0.455
07/22/02	15:03:03	-0.455
07/22/02	15:04:03	-0.455
07/22/02	15:05:03	14.703
07/22/02	15:06:03	33.814
07/22/02	15:07:03	33.615
07/22/02	15:08:03	33.074
07/22/02	15:09:03	40.156
07/22/02	15:10:03	47.891
07/22/02	15:11:03	47.521
07/22/02	15:12:03	47.351
07/22/02	15:13:03	49.370
07/22/02	15:14:03	49.142
07/22/02	15:15:03	47.891
07/22/02	15:16:03	47.578
07/22/02	15:17:03	46.782
07/22/02	15:18:03	45.929
07/22/02	15:19:03	47.834
07/22/02	15:20:03	46.896
07/22/02	15:21:03	46.725
07/22/02	15:22:03	47.322
07/22/02	15:23:03	47.351
07/22/02	15:24:03	48.005
07/22/02	15:25:03	47.407
07/22/02	15:26:03	49.853
07/22/02	15:27:03	41.265
07/22/02	15:28:03	42.630
07/22/02	15:29:03	42.402
07/22/02	15:30:03	41.947
07/22/02	15:31:03	40.923
07/22/02	15:32:03	40.468
07/22/02	15:33:03	45.530
07/22/02	15:34:03	47.777
07/22/02	15:35:03	48.431
07/22/02	15:36:03	50.251
07/22/02	15:37:03	51.218
07/22/02	15:38:03	50.536
07/22/02	15:39:03	49.853
07/22/02	15:40:03	50.365
07/22/02	15:41:03	49.370
07/22/02	15:42:03	49.512
07/22/02	15:43:03	47.095
07/22/02	15:44:03	49.512
07/22/02	15:45:03	50.991
07/22/02	15:46:03	67.115
07/22/02	15:47:03	66.291
07/22/02	15:48:03	67.457
07/22/02	15:49:03	66.234
07/22/02	15:50:03	67.115
07/22/02	15:51:03	66.604
07/22/02	15:52:03	67.457
07/22/02	15:53:03	66.860
07/22/02	15:54:03	66.490
07/22/02	15:55:03	66.433
07/22/02	15:56:03	65.608
07/22/02	15:57:03	64.954
07/22/02	15:58:03	62.480
07/22/02	15:59:03	64.698
07/22/02	16:00:03	63.532
07/22/02	16:01:03	63.020
07/22/02	16:02:03	63.703
07/22/02	16:03:03	62.594
07/22/02	16:04:03	63.162
07/22/02	16:05:03	64.812
07/22/02	16:06:03	65.381
07/22/02	16:07:03	65.921
07/22/02	16:08:03	63.703
07/22/02	16:09:03	66.547
07/22/02	16:10:03	67.656
07/22/02	16:11:03	65.864
07/22/02	16:12:03	67.826
07/22/02	16:13:03	65.921
07/22/02	16:14:03	63.447
07/22/02	16:15:03	62.423
07/22/02	16:16:03	62.423
07/22/02	16:17:03	63.162
07/22/02	16:18:03	63.873
07/22/02	16:19:03	63.532
07/22/02	16:20:03	65.068
07/22/02	16:21:03	64.641
07/22/02	16:22:03	64.129
07/22/02	16:23:03	63.902
07/22/02	16:24:03	63.760
07/22/02	16:25:03	64.129
07/22/02	16:26:03	64.186
07/22/02	16:27:03	63.646
07/22/02	16:28:03	65.295
07/22/02	16:29:03	65.864
07/22/02	16:30:03	65.239
07/22/02	16:31:03	65.125
07/22/02	16:32:03	66.348
07/22/02	16:33:03	64.129
07/22/02	16:34:03	65.011
07/22/02	16:35:03	64.186
07/22/02	16:36:03	64.954
07/22/02	16:37:03	64.755
07/22/02	16:38:03	63.902
07/22/02	16:39:03	62.793
07/22/02	16:40:03	65.381
07/22/02	16:41:03	66.547
07/22/02	16:42:03	66.177
07/22/02	16:43:03	66.177
07/22/02	16:44:03	65.125
07/22/02	16:45:03	67.826
07/22/02	16:46:03	65.551
07/22/02	16:47:03	67.542
07/22/02	16:48:03	66.916
07/22/02	16:49:03	65.068
07/22/02	16:50:03	66.604
07/22/02	16:51:03	65.551
07/22/02	16:52:03	65.665
07/22/02	16:53:03	65.694
07/22/02	16:54:03	65.381
07/22/02	16:55:03	66.006
07/22/02	16:56:03	66.063
07/22/02	16:57:03	63.902
07/22/02	16:58:03	63.532
07/22/02	16:59:03	63.959
07/22/02	17:00:03	61.598
07/22/02	17:01:03	64.215
07/22/02	17:02:03	65.324
07/22/02	17:03:03	64.385
07/22/02	17:04:03	64.499
07/22/02	17:05:03	64.869
07/22/02	17:06:03	62.281
07/22/02	17:07:03	64.556
07/22/02	17:08:03	64.812
07/22/02	17:09:03	66.348
07/22/02	17:10:03	65.494
07/22/02	17:11:03	66.177
07/22/02	17:12:03	66.291
07/22/02	17:13:03	66.433
07/22/02	17:14:03	64.328
07/22/02	17:15:03	65.438
07/22/02	17:16:03	66.120
07/22/02	17:17:03	63.589
07/22/02	17:18:03	65.182
07/22/02	17:19:03	65.978
07/22/02	17:20:03	65.608
07/22/02	17:21:03	65.239
07/22/02	17:22:03	64.272
07/22/02	17:23:03	65.864
07/22/02	17:24:03	65.295
07/22/02	17:25:03	64.499
07/22/02	17:26:03	65.864
07/22/02	17:27:03	66.006
07/22/02	17:28:03	67.656
07/22/02	17:29:03	64.584
07/22/02	17:30:03	65.068
07/22/02	17:31:03	63.959
07/22/02	17:32:03	65.665
07/22/02	17:33:03	64.584
07/22/02	17:34:03	67.343
07/22/02	17:35:03	63.902
07/22/02	17:36:03	65.921
07/22/02	17:37:03	64.016
07/22/02	17:38:03	65.125
07/22/02	17:39:03	65.125
07/22/02	17:40:03	65.068
07/22/02	17:41:03	64.812
07/22/02	17:42:03	65.182
07/22/02	17:43:03	64.186
07/22/02	17:44:03	64.186
07/22/02	17:45:03	63.873
07/22/02	17:46:03	64.016
07/22/02	17:47:03	64.328
07/22/02	17:48:03	66.604
07/22/02	17:49:03	65.324
07/22/02	17:50:03	64.869
07/22/02	17:51:03	65.694
07/22/02	17:52:03	65.381
07/22/02	17:53:03	65.694
07/22/02	17:54:03	63.703
07/22/02	17:55:03	64.556
07/22/02	17:56:03	63.504
07/22/02	17:57:03	64.016
07/22/02	17:58:03	64.016
07/22/02	17:59:03	62.082
07/22/02	18:00:03	63.447
07/22/02	18:01:03	62.025
07/22/02	18:02:03	61.968
07/22/02	18:03:03	63.333
07/22/02	18:04:03	62.764
07/22/02	18:05:03	62.082
07/22/02	18:06:03	64.698
07/22/02	18:07:03	63.504
07/22/02	18:08:03	63.333
07/22/02	18:09:03	63.817
07/22/02	18:10:03	64.328
07/22/02	18:11:03	65.324
07/22/02	18:12:03	62.224
07/22/02	18:13:03	62.651
07/22/02	18:14:03	62.651
07/22/02	18:15:03	62.537
07/22/02	18:16:03	64.073
07/22/02	18:17:03	64.926
07/22/02	18:18:03	63.646
07/22/02	18:19:03	61.229
07/22/02	18:20:03	63.646
07/22/02	18:21:03	62.025
07/22/02	18:22:03	61.712
07/22/02	18:23:03	64.272
07/22/02	18:24:03	65.750
07/22/02	18:25:03	66.660
07/22/02	18:26:03	62.764
07/22/02	18:27:03	61.655
07/22/02	18:28:03	63.390
07/22/02	18:29:03	64.812
07/22/02	18:30:03	65.551
07/22/02	18:31:03	65.239
07/22/02	18:32:03	64.641
07/22/02	18:33:03	63.902
07/22/02	18:34:03	60.973
07/22/02	18:35:03	62.480
07/22/02	18:36:03	55.257
07/22/02	18:37:03	49.512

WEST AND UHLAND - NO. 7565 cont.

Date	Time	Pres (PSI)
07/22/02	18:38:03	50.905
07/22/02	18:39:03	50.251
07/22/02	18:40:03	51.048
07/22/02	18:41:03	51.360
07/22/02	18:42:03	60.063
07/22/02	18:43:03	63.873
07/22/02	18:44:03	62.167
07/22/02	18:45:03	64.385
07/22/02	18:46:03	63.333
07/22/02	18:47:03	63.504
07/22/02	18:48:03	61.371
07/22/02	18:49:03	59.807
07/22/02	18:50:03	59.579
07/22/02	18:51:03	61.058
07/22/02	18:52:03	62.281
07/22/02	18:53:03	62.338
07/22/02	18:54:03	63.162
07/22/02	18:55:03	60.973
07/22/02	18:56:03	64.016
07/22/02	18:57:03	62.480
07/22/02	18:58:03	61.854
07/22/02	18:59:03	64.215
07/22/02	19:00:03	59.864
07/22/02	19:01:03	60.176
07/22/02	19:02:03	59.266
07/22/02	19:03:03	59.494
07/22/02	19:04:03	59.551
07/22/02	19:05:03	60.489
07/22/02	19:06:03	57.276
07/22/02	19:07:03	60.546
07/22/02	19:08:03	59.750
07/22/02	19:09:03	62.480
07/22/02	19:10:03	58.584
07/22/02	19:11:03	62.110
07/22/02	19:12:03	66.860
07/22/02	19:13:03	60.120
07/22/02	19:14:03	64.641
07/22/02	19:15:03	64.016
07/22/02	19:16:03	63.077
07/22/02	19:17:03	64.755
07/22/02	19:18:03	63.390
07/22/02	19:19:03	64.215
07/22/02	19:20:03	61.342
07/22/02	19:21:03	62.707
07/22/02	19:22:03	59.807
07/22/02	19:23:03	63.873
07/22/02	19:24:03	62.850
07/22/02	19:25:03	62.707
07/22/02	19:26:03	63.333
07/22/02	19:27:03	62.764
07/22/02	19:28:03	62.907
07/22/02	19:29:03	61.172
07/22/02	19:30:03	62.395
07/22/02	19:31:03	62.025
07/22/02	19:32:03	64.272
07/22/02	19:33:03	63.589
07/22/02	19:34:03	61.485
07/22/02	19:35:03	60.802
07/22/02	19:36:03	62.167
07/22/02	19:37:03	63.134
07/22/02	19:38:03	61.655
07/22/02	19:39:03	63.134
07/22/02	19:40:03	61.229
07/22/02	19:41:03	61.428
07/22/02	19:42:03	62.651
07/22/02	19:43:03	62.025
07/22/02	19:44:03	63.134
07/22/02	19:45:03	59.067
07/22/02	19:46:03	62.850
07/22/02	19:47:03	60.120
07/22/02	19:48:03	63.077
07/22/02	19:49:03	60.432
07/22/02	19:50:03	62.338
07/22/02	19:51:03	62.707
07/22/02	19:52:03	63.532
07/22/02	19:53:03	61.541
07/22/02	19:54:03	62.025
07/22/02	19:55:03	63.873
07/22/02	19:56:03	64.186
07/22/02	19:57:03	62.907
07/22/02	19:58:03	63.532
07/22/02	19:59:03	62.423
07/22/02	20:00:03	62.764
07/22/02	20:01:03	63.817
07/22/02	20:02:03	62.395
07/22/02	20:03:03	62.764
07/22/02	20:04:03	64.186
07/22/02	20:05:03	63.504
07/22/02	20:06:03	64.215
07/22/02	20:07:03	63.162
07/22/02	20:08:03	64.641
07/22/02	20:09:03	61.286
07/22/02	20:10:03	63.077
07/22/02	20:11:03	62.537
07/22/02	20:12:03	64.016
07/22/02	20:13:03	62.907
07/22/02	20:14:03	62.082
07/22/02	20:15:03	61.712
07/22/02	20:16:03	61.172
07/22/02	20:17:03	63.532
07/22/02	20:18:03	60.375
07/22/02	20:19:03	64.812
07/22/02	20:20:03	62.850
07/22/02	20:21:03	64.812
07/22/02	20:22:03	64.328
07/22/02	20:23:03	64.272
07/22/02	20:24:03	63.959
07/22/02	20:25:03	62.423
07/22/02	20:26:03	64.129
07/22/02	20:27:03	64.812
07/22/02	20:28:03	62.651
07/22/02	20:29:03	62.793
07/22/02	20:30:03	65.125
07/22/02	20:31:03	63.959
07/22/02	20:32:03	63.447
07/22/02	20:33:03	62.963
07/22/02	20:34:03	62.764
07/22/02	20:35:03	64.016
07/22/02	20:36:03	62.793
07/22/02	20:37:03	64.186
07/22/02	20:38:03	60.916
07/22/02	20:39:03	60.916
07/22/02	20:40:03	61.655
07/22/02	20:41:03	62.395
07/22/02	20:42:03	61.428
07/22/02	20:43:03	63.077
07/22/02	20:44:03	61.371
07/22/02	20:45:03	63.589
07/22/02	20:46:03	62.110
07/22/02	20:47:03	60.290
07/22/02	20:48:03	61.001
07/22/02	20:49:03	59.693
07/22/02	20:50:03	61.001
07/22/02	20:51:03	62.480
07/22/02	20:52:03	62.338
07/22/02	20:53:03	62.850
07/22/02	20:54:03	60.432
07/22/02	20:55:03	62.537
07/22/02	20:56:03	63.447
07/22/02	20:57:03	60.489
07/22/02	20:58:03	63.077
07/22/02	20:59:03	63.020
07/22/02	21:00:03	63.276
07/22/02	21:01:03	63.589
07/22/02	21:02:03	62.480
07/22/02	21:03:03	61.741
07/22/02	21:04:03	61.655
07/22/02	21:05:03	60.319
07/22/02	21:06:03	61.968
07/22/02	21:07:03	57.958
07/22/02	21:08:03	60.859
07/22/02	21:09:03	61.854
07/22/02	21:10:03	60.802
07/22/02	21:11:03	63.134
07/22/02	21:12:03	62.707
07/22/02	21:13:03	61.854
07/22/02	21:14:03	62.651
07/22/02	21:15:03	62.082
07/22/02	21:16:03	62.082
07/22/02	21:17:03	62.651
07/22/02	21:18:03	62.395
07/22/02	21:19:03	62.224
07/22/02	21:20:03	60.802
07/22/02	21:21:03	60.631
07/22/02	21:22:03	63.020
07/22/02	21:23:03	63.134
07/22/02	21:24:03	64.499
07/22/02	21:25:03	64.073
07/22/02	21:26:03	62.764
07/22/02	21:27:03	62.963
07/22/02	21:28:03	60.319
07/22/02	21:29:03	61.229
07/22/02	21:30:03	62.167
07/22/02	21:31:03	62.963
07/22/02	21:32:03	62.537
07/22/02	21:33:03	61.115
07/22/02	21:34:03	61.541
07/22/02	21:35:03	61.854
07/22/02	21:36:03	61.229
07/22/02	21:37:03	63.276
07/22/02	21:38:03	62.338
07/22/02	21:39:03	61.797
07/22/02	21:40:03	62.395
07/22/02	21:41:03	62.594
07/22/02	21:42:03	63.162
07/22/02	21:43:03	62.395
07/22/02	21:44:03	62.423
07/22/02	21:45:03	62.793
07/22/02	21:46:03	63.447
07/22/02	21:47:03	63.646
07/22/02	21:48:03	64.698
07/22/02	21:49:03	63.333
07/22/02	21:50:03	64.499
07/22/02	21:51:03	66.717
07/22/02	21:52:03	65.182
07/22/02	21:53:03	65.239
07/22/02	21:54:03	66.177
07/22/02	21:55:03	66.120
07/22/02	21:56:03	64.954
07/22/02	21:57:03	62.423
07/22/02	21:58:03	64.698
07/22/02	21:59:03	64.328
07/22/02	22:00:03	66.660
07/22/02	22:01:03	63.703
07/22/02	22:02:03	61.541
07/22/02	22:03:03	63.020
07/22/02	22:04:03	61.854
07/22/02	22:05:03	62.651
07/22/02	22:06:03	62.594
07/22/02	22:07:03	49.199
07/22/02	22:08:03	47.635
07/22/02	22:09:03	54.858
07/22/02	22:10:03	62.082
07/22/02	22:11:03	60.859
07/22/02	22:12:03	61.172
07/22/02	22:13:03	61.286
07/22/02	22:14:03	60.688
07/22/02	22:15:03	60.916
07/22/02	22:16:03	61.655
07/22/02	22:17:03	61.541
07/22/02	22:18:03	61.712
07/22/02	22:19:03	61.172
07/22/02	22:20:03	64.272
07/22/02	22:21:03	62.395
07/22/02	22:22:03	61.712
07/22/02	22:23:03	61.485
07/22/02	22:24:03	64.129
07/22/02	22:25:03	63.959
07/22/02	22:26:03	61.286
07/22/02	22:27:03	64.186
07/22/02	22:28:03	64.385
07/22/02	22:29:03	63.390
07/22/02	22:30:03	64.129
07/22/02	22:31:03	65.011
07/22/02	22:32:03	64.385
07/22/02	22:33:03	64.926
07/22/02	22:34:03	64.016
07/22/02	22:35:03	65.694
07/22/02	22:36:03	65.239
07/22/02	22:37:03	66.660
07/22/02	22:38:03	66.234
07/22/02	22:39:03	67.229
07/22/02	22:40:03	66.063
07/22/02	22:41:03	65.608
07/22/02	22:42:03	66.433
07/22/02	22:43:03	67.286
07/22/02	22:44:03	65.608
07/22/02	22:45:03	67.599
07/22/02	22:46:03	65.750
07/22/02	22:47:03	69.021
07/22/02	22:48:03	67.343
07/22/02	22:49:03	68.168
07/22/02	22:50:03	67.770
07/22/02	22:51:03	68.082
07/22/02	22:52:03	66.348
07/22/02	22:53:03	68.082
07/22/02	22:54:03	68.225
07/22/02	22:55:03	55.370
07/22/02	22:56:03	56.053
07/22/02	22:57:03	57.219
07/22/02	22:58:03	54.432
07/22/02	22:59:03	54.005
07/22/02	23:00:03	61.172
07/22/02	23:01:03	64.442

WEST AND UHLAND - NO. 7565 cont.

Date	Time	Pres (PSI)
07/22/02	23:02:03	62.907
07/22/02	23:03:03	63.020
07/22/02	23:04:03	64.499
07/22/02	23:05:03	65.608
07/22/02	23:06:03	65.381
07/22/02	23:07:03	65.125
07/22/02	23:08:03	64.812
07/22/02	23:09:03	64.073
07/22/02	23:10:03	62.907
07/22/02	23:11:03	65.239
07/22/02	23:12:03	66.063
07/22/02	23:13:03	66.063
07/22/02	23:14:03	65.694
07/22/02	23:15:03	64.812
07/22/02	23:16:03	64.073
07/22/02	23:17:03	65.608
07/22/02	23:18:03	64.584
07/22/02	23:19:03	66.234
07/22/02	23:20:03	65.068
07/22/02	23:21:03	64.954
07/22/02	23:22:03	65.551
07/22/02	23:23:03	66.291
07/22/02	23:24:03	66.063
07/22/02	23:25:03	66.490
07/22/02	23:26:03	65.182
07/22/02	23:27:03	65.665
07/22/02	23:28:03	65.978
07/22/02	23:29:03	66.803
07/22/02	23:30:03	66.376
07/22/02	23:31:03	65.551
07/22/02	23:32:03	65.381
07/22/02	23:33:03	63.902
07/22/02	23:34:03	65.551
07/22/02	23:35:03	64.442
07/22/02	23:36:03	65.381
07/22/02	23:37:03	70.699
07/22/02	23:38:03	66.660
07/22/02	23:39:03	66.746
07/22/02	23:40:03	68.338
07/22/02	23:41:03	67.542
07/22/02	23:42:03	69.078
07/22/02	23:43:03	69.618
07/22/02	23:44:03	68.708
07/22/02	23:45:03	67.087
07/22/02	23:46:03	68.139
07/22/02	23:47:03	68.651
07/22/02	23:48:03	68.594
07/22/02	23:49:03	70.869
07/22/02	23:50:03	69.618
07/22/02	23:51:03	69.078
07/22/02	23:52:03	69.618
07/22/02	23:53:03	70.130
07/22/02	23:54:03	70.130
07/22/02	23:55:03	70.301
07/22/02	23:56:03	69.561
07/22/02	23:57:03	70.557
07/22/02	23:58:03	71.182
07/22/02	23:59:03	68.879
07/23/02	00:00:03	70.244
07/23/02	00:01:03	70.869
07/23/02	00:02:03	69.647
07/23/02	00:03:03	70.756
07/23/02	00:04:03	70.301
07/23/02	00:05:03	70.983
07/23/02	00:06:03	71.495
07/23/02	00:07:03	70.500
07/23/02	00:08:03	71.068
07/23/02	00:09:03	69.874
07/23/02	00:10:03	70.756
07/23/02	00:11:03	71.723
07/23/02	00:12:03	73.230
07/23/02	00:13:03	72.775
07/23/02	00:14:03	71.040
07/23/02	00:15:03	72.291
07/23/02	00:16:03	72.604
07/23/02	00:17:03	72.121
07/23/02	00:18:03	72.348
07/23/02	00:19:03	72.661
07/23/02	00:20:03	72.178
07/23/02	00:21:03	71.723
07/23/02	00:22:03	72.092
07/23/02	00:23:03	71.438
07/23/02	00:24:03	71.751
07/23/02	00:25:03	72.832
07/23/02	00:26:03	71.353
07/23/02	00:27:03	72.291
07/23/02	00:28:03	72.178
07/23/02	00:29:03	72.234
07/23/02	00:30:03	71.182
07/23/02	00:31:03	72.035
07/23/02	00:32:03	71.865
07/23/02	00:33:03	73.600
07/23/02	00:34:03	70.869
07/23/02	00:35:03	72.490
07/23/02	00:36:03	71.808
07/23/02	00:37:03	71.751
07/23/02	00:38:03	73.287
07/23/02	00:39:03	71.239
07/23/02	00:40:03	72.405
07/23/02	00:41:03	72.917
07/23/02	00:42:03	72.547
07/23/02	00:43:03	73.656
07/23/02	00:44:03	71.552
07/23/02	00:45:03	71.865
07/23/02	00:46:03	73.713
07/23/02	00:47:03	71.808
07/23/02	00:48:03	72.917
07/23/02	00:49:03	73.031
07/23/02	00:50:03	73.600
07/23/02	00:51:03	72.974
07/23/02	00:52:03	73.600
07/23/02	00:53:03	74.254
07/23/02	00:54:03	73.770
07/23/02	00:55:03	74.026
07/23/02	00:56:03	74.566
07/23/02	00:57:03	73.457
07/23/02	00:58:03	72.917
07/23/02	00:59:03	74.396
07/23/02	01:00:03	71.182
07/23/02	01:01:03	71.296
07/23/02	01:02:03	73.287
07/23/02	01:03:03	73.770
07/23/02	01:04:03	72.547
07/23/02	01:05:03	73.400
07/23/02	01:06:03	72.604
07/23/02	01:07:03	73.400
07/23/02	01:08:03	73.088
07/23/02	01:09:03	74.140
07/23/02	01:10:03	74.026
07/23/02	01:11:03	73.912
07/23/02	01:12:03	59.807
07/23/02	01:13:03	66.376
07/23/02	01:14:03	69.135
07/23/02	01:15:03	74.510
07/23/02	01:16:03	73.031
07/23/02	01:17:03	72.832
07/23/02	01:18:03	73.344
07/23/02	01:19:03	73.713
07/23/02	01:20:03	73.144
07/23/02	01:21:03	72.974
07/23/02	01:22:03	72.604
07/23/02	01:23:03	72.718
07/23/02	01:24:03	72.661
07/23/02	01:25:03	73.969
07/23/02	01:26:03	74.197
07/23/02	01:27:03	73.201
07/23/02	01:28:03	73.344
07/23/02	01:29:03	72.775
07/23/02	01:30:03	74.026
07/23/02	01:31:03	73.713
07/23/02	01:32:03	73.400
07/23/02	01:33:03	73.969
07/23/02	01:34:03	73.656
07/23/02	01:35:03	74.453
07/23/02	01:36:03	73.088
07/23/02	01:37:03	74.282
07/23/02	01:38:03	73.884
07/23/02	01:39:03	73.543
07/23/02	01:40:03	72.604
07/23/02	01:41:03	73.713
07/23/02	01:42:03	73.600
07/23/02	01:43:03	74.197
07/23/02	01:44:03	73.457
07/23/02	01:45:03	74.453
07/23/02	01:46:03	74.566
07/23/02	01:47:03	73.969
07/23/02	01:48:03	74.026
07/23/02	01:49:03	74.339
07/23/02	01:50:03	75.391
07/23/02	01:51:03	76.187
07/23/02	01:52:03	74.026
07/23/02	01:53:03	75.306
07/23/02	01:54:03	76.187
07/23/02	01:55:03	75.619
07/23/02	01:56:03	76.614
07/23/02	01:57:03	74.766
07/23/02	01:58:03	75.135
07/23/02	01:59:03	74.254
07/23/02	02:00:03	74.026
07/23/02	02:01:03	74.566
07/23/02	02:02:03	74.652
07/23/02	02:03:03	75.448
07/23/02	02:04:03	75.761
07/23/02	02:05:03	74.623
07/23/02	02:06:03	74.879
07/23/02	02:07:03	73.884
07/23/02	02:08:03	74.510
07/23/02	02:09:03	74.879
07/23/02	02:10:03	74.879
07/23/02	02:11:03	73.827
07/23/02	02:12:03	74.282
07/23/02	02:13:03	74.766
07/23/02	02:14:03	74.453
07/23/02	02:15:03	74.652
07/23/02	02:16:03	74.822
07/23/02	02:17:03	75.135
07/23/02	02:18:03	74.254
07/23/02	02:19:03	75.391
07/23/02	02:20:03	74.197
07/23/02	02:21:03	73.912
07/23/02	02:22:03	74.879
07/23/02	02:23:03	75.448
07/23/02	02:24:03	72.462
07/23/02	02:25:03	73.713
07/23/02	02:26:03	74.766
07/23/02	02:27:03	75.078
07/23/02	02:28:03	75.306
07/23/02	02:29:03	74.083
07/23/02	02:30:03	73.144
07/23/02	02:31:03	74.396
07/23/02	02:32:03	74.254
07/23/02	02:33:03	74.652
07/23/02	02:34:03	75.391
07/23/02	02:35:03	74.197
07/23/02	02:36:03	74.254
07/23/02	02:37:03	73.969
07/23/02	02:38:03	74.936
07/23/02	02:39:03	74.623
07/23/02	02:40:03	74.566
07/23/02	02:41:03	74.623
07/23/02	02:42:03	74.026
07/23/02	02:43:03	74.140
07/23/02	02:44:03	74.282
07/23/02	02:45:03	73.884
07/23/02	02:46:03	74.254
07/23/02	02:47:03	73.656
07/23/02	02:48:03	72.604
07/23/02	02:49:03	74.709
07/23/02	02:50:03	74.879
07/23/02	02:51:03	74.623
07/23/02	02:52:03	75.704
07/23/02	02:53:03	74.254
07/23/02	02:54:03	73.088
07/23/02	02:55:03	74.510
07/23/02	02:56:03	73.344
07/23/02	02:57:03	73.884
07/23/02	02:58:03	74.140
07/23/02	02:59:03	73.457
07/23/02	03:00:03	73.912
07/23/02	03:01:03	73.201
07/23/02	03:02:03	74.254
07/23/02	03:03:03	73.201
07/23/02	03:04:03	74.652
07/23/02	03:05:03	74.652
07/23/02	03:06:03	75.306
07/23/02	03:07:03	73.884
07/23/02	03:08:03	74.709
07/23/02	03:09:03	74.282
07/23/02	03:10:03	75.021
07/23/02	03:11:03	75.078
07/23/02	03:12:03	73.912
07/23/02	03:13:03	75.078
07/23/02	03:14:03	75.875
07/23/02	03:15:03	75.363
07/23/02	03:16:03	75.391
07/23/02	03:17:03	74.566
07/23/02	03:18:03	74.652
07/23/02	03:19:03	74.936
07/23/02	03:20:03	74.510
07/23/02	03:21:03	73.884
07/23/02	03:22:03	74.396
07/23/02	03:23:03	74.993
07/23/02	03:24:03	74.709
07/23/02	03:25:03	76.557

WEST AND UHLAND - NO. 7565 cont.

Date	Time	Pres (PSI)
07/23/02	03:26:03	73.600
07/23/02	03:27:03	75.021
07/23/02	03:28:03	75.021
07/23/02	03:29:03	75.306
07/23/02	03:30:03	76.358
07/23/02	03:31:03	74.140
07/23/02	03:32:03	75.619
07/23/02	03:33:03	74.652
07/23/02	03:34:03	74.453
07/23/02	03:35:03	75.988
07/23/02	03:36:03	74.766
07/23/02	03:37:03	74.993
07/23/02	03:38:03	74.936
07/23/02	03:39:03	75.363
07/23/02	03:40:03	74.993
07/23/02	03:41:03	74.652
07/23/02	03:42:03	74.197
07/23/02	03:43:03	74.936
07/23/02	03:44:03	74.879
07/23/02	03:45:03	73.770
07/23/02	03:46:03	74.282
07/23/02	03:47:03	74.709
07/23/02	03:48:03	74.140
07/23/02	03:49:03	74.652
07/23/02	03:50:03	75.192
07/23/02	03:51:03	74.822
07/23/02	03:52:03	75.021
07/23/02	03:53:03	74.566
07/23/02	03:54:03	74.822
07/23/02	03:55:03	75.135
07/23/02	03:56:03	74.766
07/23/02	03:57:03	74.510
07/23/02	03:58:03	74.026
07/23/02	03:59:03	74.566
07/23/02	04:00:03	74.339
07/23/02	04:01:03	75.192
07/23/02	04:02:03	74.766
07/23/02	04:03:03	74.709
07/23/02	04:04:03	75.135
07/23/02	04:05:03	74.709
07/23/02	04:06:03	74.254
07/23/02	04:07:03	75.391
07/23/02	04:08:03	74.879
07/23/02	04:09:03	74.282
07/23/02	04:10:03	73.031
07/23/02	04:11:03	74.936
07/23/02	04:12:03	73.969
07/23/02	04:13:03	74.822
07/23/02	04:14:03	73.912
07/23/02	04:15:03	74.566
07/23/02	04:16:03	74.339
07/23/02	04:17:03	74.879
07/23/02	04:18:03	74.140
07/23/02	04:19:03	74.510
07/23/02	04:20:03	74.453
07/23/02	04:21:03	73.400
07/23/02	04:22:03	74.396
07/23/02	04:23:03	74.566
07/23/02	04:24:03	75.249
07/23/02	04:25:03	74.652
07/23/02	04:26:03	74.282
07/23/02	04:27:03	74.566
07/23/02	04:28:03	74.140
07/23/02	04:29:03	74.936
07/23/02	04:30:03	74.254
07/23/02	04:31:03	74.709

Date	Time	Pres (PSI)
07/23/02	04:32:03	73.514
07/23/02	04:33:03	74.083
07/23/02	04:34:03	75.363
07/23/02	04:35:03	74.140
07/23/02	04:36:03	74.339
07/23/02	04:37:03	74.282
07/23/02	04:38:03	73.656
07/23/02	04:39:03	74.879
07/23/02	04:40:03	73.912
07/23/02	04:41:03	74.197
07/23/02	04:42:03	74.339
07/23/02	04:43:03	74.510
07/23/02	04:44:03	75.619
07/23/02	04:45:03	75.249
07/23/02	04:46:03	72.121
07/23/02	04:47:03	74.993
07/23/02	04:48:03	75.448
07/23/02	04:49:03	74.282
07/23/02	04:50:03	74.026
07/23/02	04:51:03	72.775
07/23/02	04:52:03	72.405
07/23/02	04:53:03	74.879
07/23/02	04:54:03	72.604
07/23/02	04:55:03	74.197
07/23/02	04:56:03	71.979
07/23/02	04:57:03	73.543
07/23/02	04:58:03	74.396
07/23/02	04:59:03	72.832
07/23/02	05:00:03	68.822
07/23/02	05:01:03	72.234
07/23/02	05:02:03	71.438
07/23/02	05:03:03	71.865
07/23/02	05:04:03	70.557
07/23/02	05:05:03	70.756
07/23/02	05:06:03	70.756
07/23/02	05:07:03	69.874
07/23/02	05:08:03	69.931
07/23/02	05:09:03	67.656
07/23/02	05:10:03	67.115
07/23/02	05:11:03	66.746
07/23/02	05:12:03	68.082
07/23/02	05:13:03	66.803
07/23/02	05:14:03	68.452
07/23/02	05:15:03	68.338
07/23/02	05:16:03	67.713
07/23/02	05:17:03	67.457
07/23/02	05:18:03	68.395
07/23/02	05:19:03	68.907
07/23/02	05:20:03	69.277
07/23/02	05:21:03	67.542
07/23/02	05:22:03	67.485
07/23/02	05:23:03	68.225
07/23/02	05:24:03	67.713
07/23/02	05:25:03	68.281
07/23/02	05:26:03	68.082
07/23/02	05:27:03	66.973
07/23/02	05:28:03	66.660
07/23/02	05:29:03	67.115
07/23/02	05:30:03	67.172
07/23/02	05:31:03	66.348
07/23/02	05:32:03	66.120
07/23/02	05:33:03	67.457
07/23/02	05:34:03	65.608
07/23/02	05:35:03	65.978
07/23/02	05:36:03	67.343
07/23/02	05:37:03	66.063

Date	Time	Pres (PSI)
07/23/02	05:38:03	64.755
07/23/02	05:39:03	63.902
07/23/02	05:40:03	64.129
07/23/02	05:41:03	66.376
07/23/02	05:42:03	64.215
07/23/02	05:43:03	64.556
07/23/02	05:44:03	64.328
07/23/02	05:45:03	65.068
07/23/02	05:46:03	63.959
07/23/02	05:47:03	62.793
07/23/02	05:48:03	61.342
07/23/02	05:49:03	61.001
07/23/02	05:50:03	66.120
07/23/02	05:51:03	72.604
07/23/02	05:52:03	70.073
07/23/02	05:53:03	71.723
07/23/02	05:54:03	70.329
07/23/02	05:55:03	71.666
07/23/02	05:56:03	71.068
07/23/02	05:57:03	70.443
07/23/02	05:58:03	71.609
07/23/02	05:59:03	69.874
07/23/02	06:00:03	70.386
07/23/02	06:01:03	71.068
07/23/02	06:02:03	71.239
07/23/02	06:03:03	70.500
07/23/02	06:04:03	69.959
07/23/02	06:05:03	69.192
07/23/02	06:06:03	68.537
07/23/02	06:07:03	67.542
07/23/02	06:08:03	69.334
07/23/02	06:09:03	68.509
07/23/02	06:10:03	67.457
07/23/02	06:11:03	68.964
07/23/02	06:12:03	68.907
07/23/02	06:13:03	69.248
07/23/02	06:14:03	69.391
07/23/02	06:15:03	67.115
07/23/02	06:16:03	66.490
07/23/02	06:17:03	68.026
07/23/02	06:18:03	68.281
07/23/02	06:19:03	68.395
07/23/02	06:20:03	67.826
07/23/02	06:21:03	67.115
07/23/02	06:22:03	66.916
07/23/02	06:23:03	67.713
07/23/02	06:24:03	68.651
07/23/02	06:25:03	54.858
07/23/02	06:26:03	55.370
07/23/02	06:27:03	59.437
07/23/02	06:28:03	66.348
07/23/02	06:29:03	68.708
07/23/02	06:30:03	64.215
07/23/02	06:31:03	66.177
07/23/02	06:32:03	66.006
07/23/02	06:33:03	64.328
07/23/02	06:34:03	66.177
07/23/02	06:35:03	67.115
07/23/02	06:36:03	65.295
07/23/02	06:37:03	65.494
07/23/02	06:38:03	65.239
07/23/02	06:39:03	67.030
07/23/02	06:40:03	66.746
07/23/02	06:41:03	66.063
07/23/02	06:42:03	64.215
07/23/02	06:43:03	63.873

Date	Time	Pres (PSI)
07/23/02	06:44:03	63.817
07/23/02	06:45:03	65.551
07/23/02	06:46:03	66.291
07/23/02	06:47:03	65.921
07/23/02	06:48:03	65.665
07/23/02	06:49:03	66.376
07/23/02	06:50:03	65.807
07/23/02	06:51:03	65.125
07/23/02	06:52:03	62.764
07/23/02	06:53:03	63.646
07/23/02	06:54:03	65.295
07/23/02	06:55:03	65.324
07/23/02	06:56:03	64.926
07/23/02	06:57:03	65.295
07/23/02	06:58:03	65.978
07/23/02	06:59:03	66.177
07/23/02	07:00:03	65.182
07/23/02	07:01:03	65.011
07/23/02	07:02:03	63.219
07/23/02	07:03:03	65.239
07/23/02	07:04:03	65.551
07/23/02	07:05:03	61.911
07/23/02	07:06:03	63.646
07/23/02	07:07:03	65.551
07/23/02	07:08:03	64.812
07/23/02	07:09:03	64.499
07/23/02	07:10:03	65.324
07/23/02	07:11:03	64.215
07/23/02	07:12:03	64.556
07/23/02	07:13:03	61.797
07/23/02	07:14:03	63.162
07/23/02	07:15:03	63.646
07/23/02	07:16:03	61.598
07/23/02	07:17:03	61.229
07/23/02	07:18:03	62.167
07/23/02	07:19:03	62.338
07/23/02	07:20:03	60.603
07/23/02	07:21:03	62.395
07/23/02	07:22:03	62.480
07/23/02	07:23:03	63.447
07/23/02	07:24:03	64.016
07/23/02	07:25:03	63.219
07/23/02	07:26:03	62.224
07/23/02	07:27:03	63.134
07/23/02	07:28:03	62.764
07/23/02	07:29:03	65.438
07/23/02	07:30:03	63.589
07/23/02	07:31:03	63.959
07/23/02	07:32:03	60.489
07/23/02	07:33:03	63.532
07/23/02	07:34:03	63.703
07/23/02	07:35:03	64.755
07/23/02	07:36:03	63.902
07/23/02	07:37:03	64.215
07/23/02	07:38:03	64.073
07/23/02	07:39:03	62.850
07/23/02	07:40:03	66.433
07/23/02	07:41:03	67.115
07/23/02	07:42:03	66.006
07/23/02	07:43:03	64.869
07/23/02	07:44:03	65.068
07/23/02	07:45:03	64.641
07/23/02	07:46:03	63.703
07/23/02	07:47:03	64.584
07/23/02	07:48:03	65.295
07/23/02	07:49:03	65.381

WEST AND UHLAND - NO. 7565 cont.

Date	Time	Pres (PSI)
07/23/02	07:50:03	63.760
07/23/02	07:51:03	65.978
07/23/02	07:52:03	65.694
07/23/02	07:53:03	64.698
07/23/02	07:54:03	67.087
07/23/02	07:55:03	67.343
07/23/02	07:56:03	65.608
07/23/02	07:57:03	64.812
07/23/02	07:58:03	64.926
07/23/02	07:59:03	66.348
07/23/02	08:00:03	64.016
07/23/02	08:01:03	67.770
07/23/02	08:02:03	65.978
07/23/02	08:03:03	67.656
07/23/02	08:04:03	68.879
07/23/02	08:05:03	68.139
07/23/02	08:06:03	67.713
07/23/02	08:07:03	65.324
07/23/02	08:08:03	66.746
07/23/02	08:09:03	65.978
07/23/02	08:10:03	64.073
07/23/02	08:11:03	67.343
07/23/02	08:12:03	66.916
07/23/02	08:13:03	67.286
07/23/02	08:14:03	66.490
07/23/02	08:15:03	66.490
07/23/02	08:16:03	68.509
07/23/02	08:17:03	67.087
07/23/02	08:18:03	68.395
07/23/02	08:19:03	68.594
07/23/02	08:20:03	66.973
07/23/02	08:21:03	68.139
07/23/02	08:22:03	68.879
07/23/02	08:23:03	65.807
07/23/02	08:24:03	66.177
07/23/02	08:25:03	67.087
07/23/02	08:26:03	66.746
07/23/02	08:27:03	65.864
07/23/02	08:28:03	65.551
07/23/02	08:29:03	63.134
07/23/02	08:30:03	66.746
07/23/02	08:31:03	67.115
07/23/02	08:32:03	68.082
07/23/02	08:33:03	65.381
07/23/02	08:34:03	66.006
07/23/02	08:35:03	66.916
07/23/02	08:36:03	64.755
07/23/02	08:37:03	63.589
07/23/02	08:38:03	67.485
07/23/02	08:39:03	65.921
07/23/02	08:40:03	65.494
07/23/02	08:41:03	66.063
07/23/02	08:42:03	64.385
07/23/02	08:43:03	67.855
07/23/02	08:44:03	63.703
07/23/02	08:45:03	49.427
07/23/02	08:46:03	49.057
07/23/02	08:47:03	49.483
07/23/02	08:48:03	46.896
07/23/02	08:49:03	46.270
07/23/02	08:50:03	62.850
07/23/02	08:51:03	64.698
07/23/02	08:52:03	64.385
07/23/02	08:53:03	62.423
07/23/02	08:54:03	61.968
07/23/02	08:55:03	62.167
07/23/02	08:56:03	64.328
07/23/02	08:57:03	63.219
07/23/02	08:58:03	62.793
07/23/02	08:59:03	55.854
07/23/02	09:00:03	53.266
07/23/02	09:01:03	54.204
07/23/02	09:02:03	51.588
07/23/02	09:03:03	52.014
07/23/02	09:04:03	52.953
07/23/02	09:05:03	50.365
07/23/02	09:06:03	51.304
07/23/02	09:07:03	50.991
07/23/02	09:08:03	51.048
07/23/02	09:09:03	49.882
07/23/02	09:10:03	49.569
07/23/02	09:11:03	50.166
07/23/02	09:12:03	48.062
07/23/02	09:13:03	49.739
07/23/02	09:14:03	50.905
07/23/02	09:15:03	49.796
07/23/02	09:16:03	51.104
07/23/02	09:17:03	51.673
07/23/02	09:18:03	49.626
07/23/02	09:19:03	52.697
07/23/02	09:20:03	51.901
07/23/02	09:21:03	49.057
07/23/02	09:22:03	51.104
07/23/02	09:23:03	53.636
07/23/02	09:24:03	53.209
07/23/02	09:25:03	58.271
07/23/02	09:26:03	61.911
07/23/02	09:27:03	61.598
07/23/02	09:28:03	63.504
07/23/02	09:29:03	63.134
07/23/02	09:30:03	61.854
07/23/02	09:31:03	62.338
07/23/02	09:32:03	62.764
07/23/02	09:33:03	64.499
07/23/02	09:34:03	61.229
07/23/02	09:35:03	64.215
07/23/02	09:36:03	62.850
07/23/02	09:37:03	62.395
07/23/02	09:38:03	63.873
07/23/02	09:39:03	63.703
07/23/02	09:40:03	62.082
07/23/02	09:41:03	63.873
07/23/02	09:42:03	62.850
07/23/02	09:43:03	62.764
07/23/02	09:44:03	66.291
07/23/02	09:45:03	65.921
07/23/02	09:46:03	65.239
07/23/02	09:47:03	64.385
07/23/02	09:48:03	65.011
07/23/02	09:49:03	66.490
07/23/02	09:50:03	65.239
07/23/02	09:51:03	66.973
07/23/02	09:52:03	67.542
07/23/02	09:53:03	66.490
07/23/02	09:54:03	68.082
07/23/02	09:55:03	65.239
07/23/02	09:56:03	62.764
07/23/02	09:57:03	63.077
07/23/02	09:58:03	61.428
07/23/02	09:59:03	61.342
07/23/02	10:00:03	62.963
07/23/02	10:01:03	61.741
07/23/02	10:02:03	64.954
07/23/02	10:03:03	62.167
07/23/02	10:04:03	63.162
07/23/02	10:05:03	61.172
07/23/02	10:06:03	61.911
07/23/02	10:07:03	61.371
07/23/02	10:08:03	59.579
07/23/02	10:09:03	62.110
07/23/02	10:10:03	62.963
07/23/02	10:11:03	63.504
07/23/02	10:12:03	63.504
07/23/02	10:13:03	63.390
07/23/02	10:14:03	62.395
07/23/02	10:15:03	60.802
07/23/02	10:16:03	62.764
07/23/02	10:17:03	61.371
07/23/02	10:18:03	64.698
07/23/02	10:19:03	63.760
07/23/02	10:20:03	63.390
07/23/02	10:21:03	64.698
07/23/02	10:22:03	67.343
07/23/02	10:23:03	64.385
07/23/02	10:24:03	67.770
07/23/02	10:25:03	65.381
07/23/02	10:26:03	65.665
07/23/02	10:27:03	65.068
07/23/02	10:28:03	67.286
07/23/02	10:29:03	63.589
07/23/02	10:30:03	64.186
07/23/02	10:31:03	64.442
07/23/02	10:32:03	65.694
07/23/02	10:33:03	66.348
07/23/02	10:34:03	64.499
07/23/02	10:35:03	65.807
07/23/02	10:36:03	67.599
07/23/02	10:37:03	65.921
07/23/02	10:38:03	65.807
07/23/02	10:39:03	66.177
07/23/02	10:40:03	65.978
07/23/02	10:41:03	63.504
07/23/02	10:42:03	65.438
07/23/02	10:43:03	64.584
07/23/02	10:44:03	64.584
07/23/02	10:45:03	65.665
07/23/02	10:46:03	63.276
07/23/02	10:47:03	63.873
07/23/02	10:48:03	64.129
07/23/02	10:49:03	62.963
07/23/02	10:50:03	64.129
07/23/02	10:51:03	62.850
07/23/02	10:52:03	63.162
07/23/02	10:53:03	64.016
07/23/02	10:54:03	65.295
07/23/02	10:55:03	62.167
07/23/02	10:56:03	63.020
07/23/02	10:57:03	62.395
07/23/02	10:58:03	60.859
07/23/02	10:59:03	63.390
07/23/02	11:00:03	60.176
07/23/02	11:01:03	59.750
07/23/02	11:02:03	60.916
07/23/02	11:03:03	62.480
07/23/02	11:04:03	61.741
07/23/02	11:05:03	62.395
07/23/02	11:06:03	39.928
07/23/02	11:07:03	58.954
07/23/02	11:08:03	59.209
07/23/02	11:09:03	60.233
07/23/02	11:10:03	61.229
07/23/02	11:11:03	60.631
07/23/02	11:12:03	59.067
07/23/02	11:13:03	59.920
07/23/02	11:14:03	61.115
07/23/02	11:15:03	60.688
07/23/02	11:16:03	60.688
07/23/02	11:17:03	59.181
07/23/02	11:18:03	59.636
07/23/02	11:19:03	59.437
07/23/02	11:20:03	57.020
07/23/02	11:21:03	59.181
07/23/02	11:22:03	59.920
07/23/02	11:23:03	61.001
07/23/02	11:24:03	60.973
07/23/02	11:25:03	63.333
07/23/02	11:26:03	59.494
07/23/02	11:27:03	59.920
07/23/02	11:28:03	60.006
07/23/02	11:29:03	60.859
07/23/02	11:30:03	60.916
07/23/02	11:31:03	58.470
07/23/02	11:32:03	62.651
07/23/02	11:33:03	63.276
07/23/02	11:34:03	62.338
07/23/02	11:35:03	64.499
07/23/02	11:36:03	65.381
07/23/02	11:37:03	64.073
07/23/02	11:38:03	62.594
07/23/02	11:39:03	63.276
07/23/02	11:40:03	61.968
07/23/02	11:41:03	63.077
07/23/02	11:42:03	65.011
07/23/02	11:43:03	60.432
07/23/02	11:44:03	61.485
07/23/02	11:45:03	63.390
07/23/02	11:46:03	62.850
07/23/02	11:47:03	63.077
07/23/02	11:48:03	63.333
07/23/02	11:49:03	63.219
07/23/02	11:50:03	63.276
07/23/02	11:51:03	66.063
07/23/02	11:52:03	62.963
07/23/02	11:53:03	62.395
07/23/02	11:54:03	63.134
07/23/02	11:55:03	61.286
07/23/02	11:56:03	62.793
07/23/02	11:57:03	64.186
07/23/02	11:58:03	62.281
07/23/02	11:59:03	64.073
07/23/02	12:00:03	63.532
07/23/02	12:01:03	62.907
07/23/02	12:02:03	61.911
07/23/02	12:03:03	63.162
07/23/02	12:04:03	60.973
07/23/02	12:05:03	60.319
07/23/02	12:06:03	59.864
07/23/02	12:07:03	63.276
07/23/02	12:08:03	62.281
07/23/02	12:09:03	62.395
07/23/02	12:10:03	61.911
07/23/02	12:11:03	63.532
07/23/02	12:12:03	61.229
07/23/02	12:13:03	60.176

WEST AND UHLAND - NO. 7565 cont.

Date	Time	Pres (PSI)
07/23/02	12:14:03	61.655
07/23/02	12:15:03	62.395
07/23/02	12:16:03	61.058
07/23/02	12:17:03	64.129
07/23/02	12:18:03	60.233
07/23/02	12:19:03	59.380
07/23/02	12:20:03	63.873
07/23/02	12:21:03	61.854
07/23/02	12:22:03	59.750
07/23/02	12:23:03	60.973
07/23/02	12:24:03	60.319
07/23/02	12:25:03	60.603
07/23/02	12:26:03	62.281
07/23/02	12:27:03	61.911
07/23/02	12:28:03	63.390
07/23/02	12:29:03	63.162
07/23/02	12:30:03	60.375
07/23/02	12:31:03	63.589
07/23/02	12:32:03	62.082
07/23/02	12:33:03	62.707
07/23/02	12:34:03	62.082
07/23/02	12:35:03	63.589
07/23/02	12:36:03	66.490
07/23/02	12:37:03	65.068
07/23/02	12:38:03	63.532
07/23/02	12:39:03	64.641
07/23/02	12:40:03	63.134
07/23/02	12:41:03	59.010
07/23/02	12:42:03	62.537
07/23/02	12:43:03	66.291
07/23/02	12:44:03	66.746
07/23/02	12:45:03	66.604
07/23/02	12:46:03	66.063
07/23/02	12:47:03	63.873
07/23/02	12:48:03	62.907
07/23/02	12:49:03	64.812
07/23/02	12:50:03	66.291
07/23/02	12:51:03	65.068
07/23/02	12:52:03	64.869
07/23/02	12:53:03	64.641
07/23/02	12:54:03	64.442
07/23/02	12:55:03	64.698
07/23/02	12:56:03	63.020
07/23/02	12:57:03	62.907
07/23/02	12:58:03	63.077
07/23/02	12:59:03	62.167
07/23/02	13:00:03	62.651
07/23/02	13:01:03	59.864
07/23/02	13:02:03	61.911
07/23/02	13:03:03	63.589
07/23/02	13:04:03	64.499
07/23/02	13:05:03	63.020
07/23/02	13:06:03	57.788
07/23/02	13:07:03	56.735
07/23/02	13:08:03	58.954
07/23/02	13:09:03	62.338
07/23/02	13:10:03	42.459
07/23/02	13:11:03	39.359
07/23/02	13:12:03	38.990
07/23/02	13:13:03	38.762
07/23/02	13:14:03	37.767
07/23/02	13:15:03	37.824
07/23/02	13:16:03	36.089
07/23/02	13:17:03	34.610
07/23/02	13:18:03	33.615
07/23/02	13:19:03	32.022
07/23/02	13:20:03	35.520
07/23/02	13:21:03	43.142
07/23/02	13:22:03	50.251
07/23/02	13:23:03	61.655
07/23/02	13:24:03	61.115
07/23/02	13:25:03	62.224
07/23/02	13:26:03	62.338
07/23/02	13:27:03	64.556
07/23/02	13:28:03	61.598
07/23/02	13:29:03	64.186
07/23/02	13:30:03	64.073
07/23/02	13:31:03	63.532
07/23/02	13:32:03	61.229
07/23/02	13:33:03	61.172
07/23/02	13:34:03	64.584
07/23/02	13:35:03	63.020
07/23/02	13:36:03	61.854
07/23/02	13:37:03	60.859
07/23/02	13:38:03	62.707
07/23/02	13:39:03	60.916
07/23/02	13:40:03	60.432
07/23/02	13:41:03	61.911
07/23/02	13:42:03	61.911
07/23/02	13:43:03	60.973
07/23/02	13:44:03	69.248
07/23/02	13:45:03	66.746
07/23/02	13:46:03	61.541
07/23/02	13:47:03	65.324
07/23/02	13:48:03	61.342
07/23/02	13:49:03	62.907
07/23/02	13:50:03	62.537
07/23/02	13:51:03	64.584
07/23/02	13:52:03	61.115
07/23/02	13:53:03	63.390
07/23/02	13:54:03	63.532
07/23/02	13:55:03	62.537
07/23/02	13:56:03	53.806
07/23/02	13:57:03	54.062
07/23/02	13:58:03	54.005
07/23/02	13:59:03	52.953
07/23/02	14:00:03	50.934
07/23/02	14:01:03	51.673
07/23/02	14:02:03	51.474
07/23/02	14:03:03	54.176
07/23/02	14:04:03	62.907
07/23/02	14:05:03	63.760
07/23/02	14:06:03	62.850
07/23/02	14:07:03	61.797
07/23/02	14:08:03	63.162
07/23/02	14:09:03	61.001
07/23/02	14:10:03	61.371
07/23/02	14:11:03	64.499
07/23/02	14:12:03	63.134
07/23/02	14:13:03	63.760
07/23/02	14:14:03	63.219
07/23/02	14:15:03	63.589
07/23/02	14:16:03	63.902
07/23/02	14:17:03	63.333
07/23/02	14:18:03	66.717
07/23/02	14:19:03	62.338
07/23/02	14:20:03	61.741
07/23/02	14:21:03	64.073
07/23/02	14:22:03	65.381
07/23/02	14:23:03	63.532
07/23/02	14:24:03	64.698
07/23/02	14:25:03	66.433
07/23/02	14:26:03	63.959
07/23/02	14:27:03	65.750
07/23/02	14:28:03	64.556
07/23/02	14:29:03	64.186
07/23/02	14:30:03	63.447
07/23/02	14:31:03	64.869
07/23/02	14:32:03	65.324
07/23/02	14:33:03	63.817
07/23/02	14:34:03	61.342
07/23/02	14:35:03	63.760
07/23/02	14:36:03	63.532
07/23/02	14:37:03	63.589
07/23/02	14:38:03	61.598
07/23/02	14:39:03	63.959
07/23/02	14:40:03	63.703
07/23/02	14:41:03	63.959
07/23/02	14:42:03	63.703
07/23/02	14:43:03	65.807
07/23/02	14:44:03	65.182
07/23/02	14:45:03	58.328
07/23/02	14:46:03	46.213
07/23/02	14:47:03	47.891
07/23/02	14:48:03	58.385
07/23/02	14:49:03	61.598
07/23/02	14:50:03	62.594
07/23/02	14:51:03	61.058
07/23/02	14:52:03	63.390
07/23/02	14:53:03	63.134
07/23/02	14:54:03	59.807
07/23/02	14:55:03	59.807
07/23/02	14:56:03	62.793
07/23/02	14:57:03	61.172
07/23/02	14:58:03	61.655
07/23/02	14:59:03	65.125
07/23/02	15:00:03	63.390
07/23/02	15:01:03	62.963
07/23/02	15:02:03	63.646
07/23/02	15:03:03	64.272
07/23/02	15:04:03	62.167
07/23/02	15:05:03	63.589
07/23/02	15:06:03	62.651
07/23/02	15:07:03	63.589
07/23/02	15:08:03	62.907
07/23/02	15:09:03	62.338
07/23/02	15:10:03	61.286
07/23/02	15:11:03	62.224
07/23/02	15:12:03	62.338
07/23/02	15:13:03	63.532
07/23/02	15:14:03	63.504
07/23/02	15:15:03	62.764
07/23/02	15:16:03	63.390
07/23/02	15:17:03	61.598
07/23/02	15:18:03	64.016
07/23/02	15:19:03	64.755
07/23/02	15:20:03	68.879
07/23/02	15:21:03	63.134
07/23/02	15:22:03	65.011
07/23/02	15:23:03	63.873
07/23/02	15:24:03	63.589
07/23/02	15:25:03	67.030
07/23/02	15:26:03	68.082
07/23/02	15:27:03	66.177
07/23/02	15:28:03	66.234
07/23/02	15:29:03	65.750
07/23/02	15:30:03	66.604
07/23/02	15:31:03	66.604
07/23/02	15:32:03	66.660
07/23/02	15:33:03	65.295
07/23/02	15:34:03	65.608
07/23/02	15:35:03	65.750
07/23/02	15:36:03	65.864
07/23/02	15:37:03	61.968
07/23/02	15:38:03	65.239
07/23/02	15:39:03	65.921
07/23/02	15:40:03	64.641
07/23/02	15:41:03	63.646
07/23/02	15:42:03	65.239
07/23/02	15:43:03	64.641
07/23/02	15:44:03	65.665
07/23/02	15:45:03	68.708
07/23/02	15:46:03	68.082
07/23/02	15:47:03	66.803
07/23/02	15:48:03	67.400
07/23/02	15:49:03	67.457
07/23/02	15:50:03	66.660
07/23/02	15:51:03	66.348
07/23/02	15:52:03	66.717
07/23/02	15:53:03	65.665
07/23/02	15:54:03	64.016
07/23/02	15:55:03	64.812
07/23/02	15:56:03	66.006
07/23/02	15:57:03	67.286
07/23/02	15:58:03	64.442
07/23/02	15:59:03	65.750
07/23/02	16:00:03	65.864
07/23/02	16:01:03	64.698
07/23/02	16:02:03	65.125
07/23/02	16:03:03	65.068
07/23/02	16:04:03	63.077
07/23/02	16:05:03	64.556
07/23/02	16:06:03	64.641
07/23/02	16:07:03	65.182
07/23/02	16:08:03	64.073
07/23/02	16:09:03	64.186
07/23/02	16:10:03	63.902
07/23/02	16:11:03	64.215
07/23/02	16:12:03	62.850
07/23/02	16:13:03	64.129
07/23/02	16:14:03	64.698
07/23/02	16:15:03	65.324
07/23/02	16:16:03	64.584
07/23/02	16:17:03	63.020
07/23/02	16:18:03	63.817
07/23/02	16:19:03	64.073
07/23/02	16:20:03	62.594
07/23/02	16:21:03	64.584
07/23/02	16:22:03	65.239
07/23/02	16:23:03	65.182
07/23/02	16:24:03	46.839
07/23/02	16:25:03	63.902
07/23/02	16:26:03	66.063
07/23/02	16:27:03	67.115
07/23/02	16:28:03	66.348
07/23/02	16:29:03	65.182
07/23/02	16:30:03	66.376
07/23/02	16:31:03	66.291
07/23/02	16:32:03	65.750
07/23/02	16:33:03	66.348
07/23/02	16:34:03	64.016
07/23/02	16:35:03	66.120
07/23/02	16:36:03	64.954
07/23/02	16:37:03	65.324

WEST AND UHLAND - NO. 7565 cont.

Date	Time	Pres (PSI)
07/23/02	16:38:03	66.916
07/23/02	16:39:03	65.807
07/23/02	16:40:03	66.063
07/23/02	16:41:03	63.703
07/23/02	16:42:03	44.620
07/23/02	16:43:03	45.360
07/23/02	16:44:03	47.635
07/23/02	16:45:03	49.000
07/23/02	16:46:03	48.374
07/23/02	16:47:03	47.777
07/23/02	16:48:03	61.001
07/23/02	16:49:03	68.452
07/23/02	16:50:03	62.338
07/23/02	16:51:03	61.741
07/23/02	16:52:03	62.110
07/23/02	16:53:03	65.494
07/23/02	16:54:03	64.641
07/23/02	16:55:03	64.215
07/23/02	16:56:03	61.115
07/23/02	16:57:03	61.371
07/23/02	16:58:03	64.016
07/23/02	16:59:03	61.371
07/23/02	17:00:03	63.162
07/23/02	17:01:03	61.541
07/23/02	17:02:03	62.025
07/23/02	17:03:03	63.134
07/23/02	17:04:03	62.167
07/23/02	17:05:03	62.281
07/23/02	17:06:03	63.020
07/23/02	17:07:03	60.688
07/23/02	17:08:03	61.115
07/23/02	17:09:03	60.603
07/23/02	17:10:03	68.765
07/23/02	17:11:03	64.584
07/23/02	17:12:03	65.807
07/23/02	17:13:03	65.324
07/23/02	17:14:03	64.812
07/23/02	17:15:03	63.902
07/23/02	17:16:03	63.646
07/23/02	17:17:03	63.447
07/23/02	17:18:03	63.020
07/23/02	17:19:03	63.532
07/23/02	17:20:03	63.589
07/23/02	17:21:03	64.755
07/23/02	17:22:03	66.234
07/23/02	17:23:03	63.447
07/23/02	17:24:03	64.755
07/23/02	17:25:03	63.589
07/23/02	17:26:03	64.641
07/23/02	17:27:03	61.342
07/23/02	17:28:03	64.954
07/23/02	17:29:03	62.764
07/23/02	17:30:03	62.537
07/23/02	17:31:03	62.793
07/23/02	17:32:03	63.276
07/23/02	17:33:03	61.968
07/23/02	17:34:03	62.423
07/23/02	17:35:03	63.532
07/23/02	17:36:03	63.390
07/23/02	17:37:03	63.902
07/23/02	17:38:03	65.324
07/23/02	17:39:03	64.755
07/23/02	17:40:03	62.907
07/23/02	17:41:03	65.068
07/23/02	17:42:03	63.504
07/23/02	17:43:03	65.381
07/23/02	17:44:03	66.604
07/23/02	17:45:03	66.376
07/23/02	17:46:03	64.954
07/23/02	17:47:03	66.177
07/23/02	17:48:03	64.641
07/23/02	17:49:03	65.068
07/23/02	17:50:03	64.499
07/23/02	17:51:03	65.125
07/23/02	17:52:03	64.698
07/23/02	17:53:03	65.750
07/23/02	17:54:03	65.807
07/23/02	17:55:03	61.598
07/23/02	17:56:03	64.442
07/23/02	17:57:03	64.016
07/23/02	17:58:03	64.442
07/23/02	17:59:03	63.959
07/23/02	18:00:03	64.926
07/23/02	18:01:03	64.926
07/23/02	18:02:03	64.869
07/23/02	18:03:03	64.584
07/23/02	18:04:03	64.272
07/23/02	18:05:03	67.229
07/23/02	18:06:03	66.063
07/23/02	18:07:03	64.073
07/23/02	18:08:03	65.295
07/23/02	18:09:03	65.665
07/23/02	18:10:03	65.011
07/23/02	18:11:03	63.646
07/23/02	18:12:03	65.068
07/23/02	18:13:03	65.665
07/23/02	18:14:03	63.589
07/23/02	18:15:03	63.333
07/23/02	18:16:03	64.272
07/23/02	18:17:03	65.665
07/23/02	18:18:03	64.812
07/23/02	18:19:03	65.068
07/23/02	18:20:03	65.011
07/23/02	18:21:03	64.129
07/23/02	18:22:03	63.589
07/23/02	18:23:03	63.646
07/23/02	18:24:03	61.229
07/23/02	18:25:03	63.276
07/23/02	18:26:03	63.276
07/23/02	18:27:03	64.272
07/23/02	18:28:03	62.850
07/23/02	18:29:03	61.598
07/23/02	18:30:03	61.854
07/23/02	18:31:03	63.902
07/23/02	18:32:03	63.276
07/23/02	18:33:03	64.186
07/23/02	18:34:03	64.129
07/23/02	18:35:03	63.873
07/23/02	18:36:03	62.537
07/23/02	18:37:03	64.129
07/23/02	18:38:03	64.073
07/23/02	18:39:03	64.698
07/23/02	18:40:03	64.954
07/23/02	18:41:03	65.068
07/23/02	18:42:03	65.182
07/23/02	18:43:03	65.921
07/23/02	18:44:03	65.125
07/23/02	18:45:03	64.016
07/23/02	18:46:03	64.272
07/23/02	18:47:03	64.556
07/23/02	18:48:03	63.162
07/23/02	18:49:03	64.186
07/23/02	18:50:03	63.532
07/23/02	18:51:03	64.442
07/23/02	18:52:03	63.817
07/23/02	18:53:03	63.134
07/23/02	18:54:03	62.594
07/23/02	18:55:03	63.447
07/23/02	18:56:03	63.902
07/23/02	18:57:03	61.911
07/23/02	18:58:03	63.333
07/23/02	18:59:03	63.390
07/23/02	19:00:03	62.907
07/23/02	19:01:03	62.907
07/23/02	19:02:03	63.817
07/23/02	19:03:03	63.959
07/23/02	19:04:03	63.873
07/23/02	19:05:03	63.646
07/23/02	19:06:03	64.869
07/23/02	19:07:03	63.333
07/23/02	19:08:03	65.125
07/23/02	19:09:03	64.215
07/23/02	19:10:03	63.219
07/23/02	19:11:03	64.641
07/23/02	19:12:03	65.807
07/23/02	19:13:03	63.817
07/23/02	19:14:03	64.215
07/23/02	19:15:03	64.073
07/23/02	19:16:03	64.186
07/23/02	19:17:03	63.504
07/23/02	19:18:03	64.215
07/23/02	19:19:03	65.750
07/23/02	19:20:03	64.129
07/23/02	19:21:03	65.978
07/23/02	19:22:03	64.442
07/23/02	19:23:03	64.016
07/23/02	19:24:03	62.963
07/23/02	19:25:03	63.817
07/23/02	19:26:03	63.333
07/23/02	19:27:03	64.812
07/23/02	19:28:03	63.447
07/23/02	19:29:03	64.129
07/23/02	19:30:03	63.646
07/23/02	19:31:03	61.797
07/23/02	19:32:03	63.077
07/23/02	19:33:03	64.812
07/23/02	19:34:03	62.707
07/23/02	19:35:03	62.907
07/23/02	19:36:03	62.764
07/23/02	19:37:03	62.850
07/23/02	19:38:03	63.162
07/23/02	19:39:03	64.385
07/23/02	19:40:03	61.655
07/23/02	19:41:03	61.797
07/23/02	19:42:03	62.850
07/23/02	19:43:03	62.707
07/23/02	19:44:03	62.224
07/23/02	19:45:03	62.338
07/23/02	19:46:03	64.328
07/23/02	19:47:03	63.532
07/23/02	19:48:03	61.371
07/23/02	19:49:03	60.546
07/23/02	19:50:03	63.333
07/23/02	19:51:03	63.162
07/23/02	19:52:03	63.959
07/23/02	19:53:03	62.480
07/23/02	19:54:03	64.016
07/23/02	19:55:03	63.902
07/23/02	19:56:03	62.793
07/23/02	19:57:03	62.963
07/23/02	19:58:03	63.646
07/23/02	19:59:03	62.338
07/23/02	20:00:03	62.480
07/23/02	20:01:03	61.229
07/23/02	20:02:03	63.532
07/23/02	20:03:03	65.011
07/23/02	20:04:03	64.073
07/23/02	20:05:03	65.295
07/23/02	20:06:03	62.651
07/23/02	20:07:03	64.926
07/23/02	20:08:03	62.338
07/23/02	20:09:03	63.134
07/23/02	20:10:03	63.817
07/23/02	20:11:03	64.442
07/23/02	20:12:03	61.655
07/23/02	20:13:03	60.916
07/23/02	20:14:03	61.741
07/23/02	20:15:03	61.797
07/23/02	20:16:03	61.968
07/23/02	20:17:03	63.020
07/23/02	20:18:03	60.603
07/23/02	20:19:03	60.631
07/23/02	20:20:03	61.797
07/23/02	20:21:03	62.963
07/23/02	20:22:03	62.423
07/23/02	20:23:03	60.319
07/23/02	20:24:03	61.229
07/23/02	20:25:03	62.082
07/23/02	20:26:03	63.077
07/23/02	20:27:03	61.911
07/23/02	20:28:03	62.395
07/23/02	20:29:03	60.063
07/23/02	20:30:03	63.162
07/23/02	20:31:03	61.741
07/23/02	20:32:03	61.342
07/23/02	20:33:03	62.281
07/23/02	20:34:03	63.760
07/23/02	20:35:03	63.276
07/23/02	20:36:03	62.423
07/23/02	20:37:03	65.239
07/23/02	20:38:03	62.764
07/23/02	20:39:03	64.272
07/23/02	20:40:03	64.812
07/23/02	20:41:03	63.276
07/23/02	20:42:03	64.869
07/23/02	20:43:03	64.698
07/23/02	20:44:03	64.328
07/23/02	20:45:03	63.162
07/23/02	20:46:03	63.333
07/23/02	20:47:03	65.438
07/23/02	20:48:03	64.698
07/23/02	20:49:03	63.873
07/23/02	20:50:03	65.295
07/23/02	20:51:03	64.442
07/23/02	20:52:03	63.162
07/23/02	20:53:03	64.129
07/23/02	20:54:03	65.011
07/23/02	20:55:03	63.902
07/23/02	20:56:03	62.167
07/23/02	20:57:03	63.333
07/23/02	20:58:03	62.480
07/23/02	20:59:03	62.793
07/23/02	21:00:03	60.290
07/23/02	21:01:03	60.745

WEST AND UHLAND - NO. 7565 cont.

Date	Time	Pres (PSI)
07/23/02	21:02:03	59.920
07/23/02	21:03:03	60.319
07/23/02	21:04:03	59.579
07/23/02	21:05:03	60.120
07/23/02	21:06:03	62.224
07/23/02	21:07:03	61.485
07/23/02	21:08:03	61.001
07/23/02	21:09:03	62.281
07/23/02	21:10:03	61.342
07/23/02	21:11:03	61.371
07/23/02	21:12:03	60.546
07/23/02	21:13:03	62.764
07/23/02	21:14:03	61.229
07/23/02	21:15:03	61.342
07/23/02	21:16:03	61.797
07/23/02	21:17:03	62.395
07/23/02	21:18:03	60.319
07/23/02	21:19:03	62.110
07/23/02	21:20:03	62.651
07/23/02	21:21:03	62.025
07/23/02	21:22:03	62.082
07/23/02	21:23:03	63.760
07/23/02	21:24:03	61.911
07/23/02	21:25:03	61.797
07/23/02	21:26:03	60.745
07/23/02	21:27:03	62.224
07/23/02	21:28:03	62.110
07/23/02	21:29:03	62.793
07/23/02	21:30:03	62.963
07/23/02	21:31:03	61.797
07/23/02	21:32:03	62.110
07/23/02	21:33:03	60.489
07/23/02	21:34:03	60.432
07/23/02	21:35:03	62.110
07/23/02	21:36:03	62.281
07/23/02	21:37:03	61.428
07/23/02	21:38:03	62.338
07/23/02	21:39:03	63.134
07/23/02	21:40:03	62.167
07/23/02	21:41:03	62.907
07/23/02	21:42:03	62.480
07/23/02	21:43:03	62.907
07/23/02	21:44:03	62.281
07/23/02	21:45:03	63.276
07/23/02	21:46:03	63.390
07/23/02	21:47:03	62.907
07/23/02	21:48:03	44.364
07/23/02	21:49:03	43.824
07/23/02	21:50:03	43.398
07/23/02	21:51:03	44.620
07/23/02	21:52:03	43.198
07/23/02	21:53:03	42.317
07/23/02	21:54:03	44.564
07/23/02	21:55:03	41.720
07/23/02	21:56:03	42.345
07/23/02	21:57:03	42.459
07/23/02	21:58:03	48.460
07/23/02	21:59:03	57.475
07/23/02	22:00:03	58.470
07/23/02	22:01:03	59.437
07/23/02	22:02:03	58.897
07/23/02	22:03:03	57.844
07/23/02	22:04:03	56.593
07/23/02	22:05:03	58.157
07/23/02	22:06:03	57.020
07/23/02	22:07:03	57.788
07/23/02	22:08:03	58.754
07/23/02	22:09:03	58.072
07/23/02	22:10:03	60.375
07/23/02	22:11:03	59.864
07/23/02	22:12:03	58.698
07/23/02	22:13:03	58.271
07/23/02	22:14:03	57.958
07/23/02	22:15:03	58.072
07/23/02	22:16:03	59.323
07/23/02	22:17:03	60.688
07/23/02	22:18:03	58.442
07/23/02	22:19:03	58.470
07/23/02	22:20:03	66.746
07/23/02	22:21:03	61.712
07/23/02	22:22:03	64.129
07/23/02	22:23:03	63.162
07/23/02	22:24:03	61.286
07/23/02	22:25:03	63.276
07/23/02	22:26:03	63.703
07/23/02	22:27:03	62.793
07/23/02	22:28:03	62.082
07/23/02	22:29:03	63.447
07/23/02	22:30:03	65.068
07/23/02	22:31:03	64.272
07/23/02	22:32:03	65.608
07/23/02	22:33:03	64.698
07/23/02	22:34:03	65.125
07/23/02	22:35:03	64.755
07/23/02	22:36:03	64.755
07/23/02	22:37:03	65.551
07/23/02	22:38:03	65.324
07/23/02	22:39:03	64.442
07/23/02	22:40:03	64.755
07/23/02	22:41:03	64.641
07/23/02	22:42:03	64.556
07/23/02	22:43:03	64.869
07/23/02	22:44:03	66.063
07/23/02	22:45:03	65.068
07/23/02	22:46:03	67.457
07/23/02	22:47:03	66.006
07/23/02	22:48:03	65.239
07/23/02	22:49:03	66.916
07/23/02	22:50:03	67.713
07/23/02	22:51:03	67.969
07/23/02	22:52:03	66.803
07/23/02	22:53:03	67.485
07/23/02	22:54:03	67.286
07/23/02	22:55:03	67.087
07/23/02	22:56:03	66.973
07/23/02	22:57:03	65.807
07/23/02	22:58:03	64.129
07/23/02	22:59:03	65.807
07/23/02	23:00:03	64.073
07/23/02	23:01:03	66.746
07/23/02	23:02:03	64.641
07/23/02	23:03:03	63.703
07/23/02	23:04:03	66.006
07/23/02	23:05:03	66.376
07/23/02	23:06:03	66.433
07/23/02	23:07:03	66.916
07/23/02	23:08:03	64.186
07/23/02	23:09:03	67.826
07/23/02	23:10:03	68.452
07/23/02	23:11:03	65.978
07/23/02	23:12:03	67.599
07/23/02	23:13:03	68.026
07/23/02	23:14:03	65.295
07/23/02	23:15:03	64.385
07/23/02	23:16:03	66.547
07/23/02	23:17:03	64.499
07/23/02	23:18:03	64.442
07/23/02	23:19:03	66.348
07/23/02	23:20:03	65.694
07/23/02	23:21:03	65.494
07/23/02	23:22:03	64.812
07/23/02	23:23:03	67.400
07/23/02	23:24:03	68.879
07/23/02	23:25:03	67.115
07/23/02	23:26:03	66.234
07/23/02	23:27:03	68.168
07/23/02	23:28:03	69.135
07/23/02	23:29:03	69.618
07/23/02	23:30:03	68.225
07/23/02	23:31:03	66.348
07/23/02	23:32:03	65.750
07/23/02	23:33:03	65.921
07/23/02	23:34:03	64.869
07/23/02	23:35:03	66.376
07/23/02	23:36:03	66.916
07/23/02	23:37:03	66.746
07/23/02	23:38:03	67.229
07/23/02	23:39:03	69.248
07/23/02	23:40:03	67.855
07/23/02	23:41:03	69.078
07/23/02	23:42:03	67.855
07/23/02	23:43:03	70.244
07/23/02	23:44:03	68.026
07/23/02	23:45:03	68.964
07/23/02	23:46:03	68.708
07/23/02	23:47:03	68.594
07/23/02	23:48:03	68.708
07/23/02	23:49:03	67.969
07/23/02	23:50:03	69.277
07/23/02	23:51:03	68.651
07/23/02	23:52:03	67.912
07/23/02	23:53:03	68.651
07/23/02	23:54:03	69.703
07/23/02	23:55:03	69.760
07/23/02	23:56:03	70.244
07/23/02	23:57:03	70.244
07/23/02	23:58:03	69.959
07/23/02	23:59:03	69.192
07/24/02	00:00:03	69.248
07/24/02	00:01:03	70.329
07/24/02	00:02:03	68.452
07/24/02	00:03:03	71.125
07/24/02	00:04:03	71.552
07/24/02	00:05:03	71.865
07/24/02	00:06:03	70.926
07/24/02	00:07:03	71.552
07/24/02	00:08:03	70.869
07/24/02	00:09:03	69.248
07/24/02	00:10:03	70.016
07/24/02	00:11:03	72.490
07/24/02	00:12:03	71.808
07/24/02	00:13:03	70.613
07/24/02	00:14:03	71.609
07/24/02	00:15:03	69.874
07/24/02	00:16:03	70.813
07/24/02	00:17:03	69.277
07/24/02	00:18:03	70.699
07/24/02	00:19:03	72.490
07/24/02	00:20:03	71.808
07/24/02	00:21:03	70.926
07/24/02	00:22:03	71.296
07/24/02	00:23:03	71.723
07/24/02	00:24:03	72.490
07/24/02	00:25:03	71.865
07/24/02	00:26:03	71.666
07/24/02	00:27:03	70.756
07/24/02	00:28:03	72.775
07/24/02	00:29:03	73.884
07/24/02	00:30:03	71.979
07/24/02	00:31:03	71.353
07/24/02	00:32:03	72.718
07/24/02	00:33:03	72.348
07/24/02	00:34:03	72.234
07/24/02	00:35:03	72.490
07/24/02	00:36:03	71.751
07/24/02	00:37:03	70.869
07/24/02	00:38:03	71.751
07/24/02	00:39:03	70.386
07/24/02	00:40:03	71.666
07/24/02	00:41:03	71.808
07/24/02	00:42:03	70.613
07/24/02	00:43:03	72.092
07/24/02	00:44:03	73.287
07/24/02	00:45:03	72.405
07/24/02	00:46:03	73.031
07/24/02	00:47:03	72.234
07/24/02	00:48:03	71.922
07/24/02	00:49:03	74.140
07/24/02	00:50:03	72.405
07/24/02	00:51:03	72.462
07/24/02	00:52:03	73.144
07/24/02	00:53:03	73.344
07/24/02	00:54:03	73.656
07/24/02	00:55:03	71.808
07/24/02	00:56:03	71.865
07/24/02	00:57:03	70.500
07/24/02	00:58:03	72.092
07/24/02	00:59:03	72.348
07/24/02	01:00:03	71.040
07/24/02	01:01:03	69.931
07/24/02	01:02:03	70.670
07/24/02	01:03:03	70.073
07/24/02	01:04:03	70.016
07/24/02	01:05:03	71.353
07/24/02	01:06:03	71.751
07/24/02	01:07:03	70.386
07/24/02	01:08:03	72.092
07/24/02	01:09:03	71.182
07/24/02	01:10:03	71.922
07/24/02	01:11:03	72.291
07/24/02	01:12:03	72.832
07/24/02	01:13:03	71.609
07/24/02	01:14:03	70.926
07/24/02	01:15:03	60.176
07/24/02	01:16:03	61.598
07/24/02	01:17:03	62.537
07/24/02	01:18:03	71.552
07/24/02	01:19:03	72.832
07/24/02	01:20:03	71.865
07/24/02	01:21:03	72.547
07/24/02	01:22:03	70.926
07/24/02	01:23:03	72.121
07/24/02	01:24:03	72.917
07/24/02	01:25:03	72.178

WEST AND UHLAND - NO. 7565 cont.

Date	Time	Pres (PSI)
07/24/02	01:26:03	71.068
07/24/02	01:27:03	72.775
07/24/02	01:28:03	72.974
07/24/02	01:29:03	72.604
07/24/02	01:30:03	71.438
07/24/02	01:31:03	72.121
07/24/02	01:32:03	70.329
07/24/02	01:33:03	71.410
07/24/02	01:34:03	71.068
07/24/02	01:35:03	71.068
07/24/02	01:36:03	72.121
07/24/02	01:37:03	72.092
07/24/02	01:38:03	71.040
07/24/02	01:39:03	71.723
07/24/02	01:40:03	72.604
07/24/02	01:41:03	71.552
07/24/02	01:42:03	71.922
07/24/02	01:43:03	71.865
07/24/02	01:44:03	72.718
07/24/02	01:45:03	71.353
07/24/02	01:46:03	71.182
07/24/02	01:47:03	71.922
07/24/02	01:48:03	70.187
07/24/02	01:49:03	72.178
07/24/02	01:50:03	71.438
07/24/02	01:51:03	71.751
07/24/02	01:52:03	71.068
07/24/02	01:53:03	70.386
07/24/02	01:54:03	70.813
07/24/02	01:55:03	73.514
07/24/02	01:56:03	72.917
07/24/02	01:57:03	72.462
07/24/02	01:58:03	72.348
07/24/02	01:59:03	72.718
07/24/02	02:00:03	72.832
07/24/02	02:01:03	74.993
07/24/02	02:02:03	71.296
07/24/02	02:03:03	74.083
07/24/02	02:04:03	72.718
07/24/02	02:05:03	73.287
07/24/02	02:06:03	73.144
07/24/02	02:07:03	73.230
07/24/02	02:08:03	72.860
07/24/02	02:09:03	73.514
07/24/02	02:10:03	71.979
07/24/02	02:11:03	71.125
07/24/02	02:12:03	72.832
07/24/02	02:13:03	72.035
07/24/02	02:14:03	72.718
07/24/02	02:15:03	72.604
07/24/02	02:16:03	58.072
07/24/02	02:17:03	59.266
07/24/02	02:18:03	62.338
07/24/02	02:19:03	62.537
07/24/02	02:20:03	63.902
07/24/02	02:21:03	64.328
07/24/02	02:22:03	64.698
07/24/02	02:23:03	64.073
07/24/02	02:24:03	64.584
07/24/02	02:25:03	63.504
07/24/02	02:26:03	63.959
07/24/02	02:27:03	70.869
07/24/02	02:28:03	74.197
07/24/02	02:29:03	70.073
07/24/02	02:30:03	71.979
07/24/02	02:31:03	71.239

Date	Time	Pres (PSI)
07/24/02	02:32:03	72.092
07/24/02	02:33:03	72.348
07/24/02	02:34:03	71.666
07/24/02	02:35:03	72.234
07/24/02	02:36:03	71.723
07/24/02	02:37:03	71.609
07/24/02	02:38:03	72.291
07/24/02	02:39:03	72.405
07/24/02	02:40:03	70.613
07/24/02	02:41:03	70.557
07/24/02	02:42:03	72.462
07/24/02	02:43:03	72.234
07/24/02	02:44:03	72.860
07/24/02	02:45:03	72.604
07/24/02	02:46:03	72.917
07/24/02	02:47:03	73.969
07/24/02	02:48:03	72.234
07/24/02	02:49:03	72.291
07/24/02	02:50:03	72.462
07/24/02	02:51:03	72.291
07/24/02	02:52:03	71.609
07/24/02	02:53:03	70.983
07/24/02	02:54:03	71.609
07/24/02	02:55:03	71.495
07/24/02	02:56:03	71.239
07/24/02	02:57:03	71.239
07/24/02	02:58:03	73.201
07/24/02	02:59:03	71.068
07/24/02	03:00:03	72.604
07/24/02	03:01:03	72.547
07/24/02	03:02:03	70.613
07/24/02	03:03:03	70.813
07/24/02	03:04:03	71.353
07/24/02	03:05:03	70.557
07/24/02	03:06:03	70.983
07/24/02	03:07:03	71.125
07/24/02	03:08:03	70.926
07/24/02	03:09:03	69.647
07/24/02	03:10:03	70.329
07/24/02	03:11:03	70.244
07/24/02	03:12:03	71.182
07/24/02	03:13:03	70.670
07/24/02	03:14:03	71.438
07/24/02	03:15:03	69.760
07/24/02	03:16:03	70.130
07/24/02	03:17:03	70.613
07/24/02	03:18:03	70.244
07/24/02	03:19:03	70.500
07/24/02	03:20:03	69.760
07/24/02	03:21:03	71.182
07/24/02	03:22:03	69.277
07/24/02	03:23:03	68.822
07/24/02	03:24:03	69.504
07/24/02	03:25:03	69.334
07/24/02	03:26:03	69.391
07/24/02	03:27:03	69.277
07/24/02	03:28:03	68.452
07/24/02	03:29:03	68.822
07/24/02	03:30:03	70.557
07/24/02	03:31:03	70.869
07/24/02	03:32:03	70.443
07/24/02	03:33:03	71.410
07/24/02	03:34:03	71.182
07/24/02	03:35:03	70.301
07/24/02	03:36:03	70.557
07/24/02	03:37:03	69.703

Date	Time	Pres (PSI)
07/24/02	03:38:03	69.391
07/24/02	03:39:03	70.699
07/24/02	03:40:03	70.301
07/24/02	03:41:03	70.386
07/24/02	03:42:03	70.983
07/24/02	03:43:03	70.926
07/24/02	03:44:03	70.613
07/24/02	03:45:03	70.187
07/24/02	03:46:03	70.073
07/24/02	03:47:03	70.670
07/24/02	03:48:03	71.239
07/24/02	03:49:03	69.647
07/24/02	03:50:03	70.557
07/24/02	03:51:03	70.813
07/24/02	03:52:03	70.329
07/24/02	03:53:03	71.182
07/24/02	03:54:03	70.613
07/24/02	03:55:03	57.759
07/24/02	03:56:03	61.428
07/24/02	03:57:03	59.494
07/24/02	03:58:03	67.855
07/24/02	03:59:03	70.329
07/24/02	04:00:03	67.087
07/24/02	04:01:03	68.537
07/24/02	04:02:03	68.452
07/24/02	04:03:03	67.030
07/24/02	04:04:03	67.770
07/24/02	04:05:03	64.954
07/24/02	04:06:03	67.115
07/24/02	04:07:03	65.011
07/24/02	04:08:03	65.807
07/24/02	04:09:03	66.433
07/24/02	04:10:03	66.348
07/24/02	04:11:03	66.063
07/24/02	04:12:03	65.182
07/24/02	04:13:03	64.215
07/24/02	04:14:03	67.286
07/24/02	04:15:03	68.168
07/24/02	04:16:03	67.229
07/24/02	04:17:03	67.087
07/24/02	04:18:03	68.395
07/24/02	04:19:03	67.542
07/24/02	04:20:03	69.248
07/24/02	04:21:03	67.542
07/24/02	04:22:03	69.703
07/24/02	04:23:03	69.647
07/24/02	04:24:03	69.618
07/24/02	04:25:03	70.386
07/24/02	04:26:03	70.756
07/24/02	04:27:03	69.760
07/24/02	04:28:03	69.504
07/24/02	04:29:03	68.395
07/24/02	04:30:03	68.822
07/24/02	04:31:03	69.447
07/24/02	04:32:03	67.485
07/24/02	04:33:03	68.395
07/24/02	04:34:03	67.599
07/24/02	04:35:03	69.959
07/24/02	04:36:03	68.594
07/24/02	04:37:03	69.334
07/24/02	04:38:03	70.073
07/24/02	04:39:03	70.329
07/24/02	04:40:03	71.495
07/24/02	04:41:03	70.813
07/24/02	04:42:03	70.073
07/24/02	04:43:03	70.670

Date	Time	Pres (PSI)
07/24/02	04:44:03	70.130
07/24/02	04:45:03	70.329
07/24/02	04:46:03	68.537
07/24/02	04:47:03	69.277
07/24/02	04:48:03	68.879
07/24/02	04:49:03	68.139
07/24/02	04:50:03	70.244
07/24/02	04:51:03	69.817
07/24/02	04:52:03	69.618
07/24/02	04:53:03	69.618
07/24/02	04:54:03	68.594
07/24/02	04:55:03	69.248
07/24/02	04:56:03	71.353
07/24/02	04:57:03	71.239
07/24/02	04:58:03	69.334
07/24/02	04:59:03	69.618
07/24/02	05:00:03	68.139
07/24/02	05:01:03	69.874
07/24/02	05:02:03	67.400
07/24/02	05:03:03	67.912
07/24/02	05:04:03	65.295
07/24/02	05:05:03	66.120
07/24/02	05:06:03	66.746
07/24/02	05:07:03	66.490
07/24/02	05:08:03	67.542
07/24/02	05:09:03	68.765
07/24/02	05:10:03	69.277
07/24/02	05:11:03	67.400
07/24/02	05:12:03	67.343
07/24/02	05:13:03	68.026
07/24/02	05:14:03	68.964
07/24/02	05:15:03	68.879
07/24/02	05:16:03	68.139
07/24/02	05:17:03	68.026
07/24/02	05:18:03	69.192
07/24/02	05:19:03	70.813
07/24/02	05:20:03	69.447
07/24/02	05:21:03	70.557
07/24/02	05:22:03	69.874
07/24/02	05:23:03	70.073
07/24/02	05:24:03	70.329
07/24/02	05:25:03	70.386
07/24/02	05:26:03	71.979
07/24/02	05:27:03	69.135
07/24/02	05:28:03	70.869
07/24/02	05:29:03	71.751
07/24/02	05:30:03	73.656
07/24/02	05:31:03	69.959
07/24/02	05:32:03	71.723
07/24/02	05:33:03	72.035
07/24/02	05:34:03	70.500
07/24/02	05:35:03	70.756
07/24/02	05:36:03	71.410
07/24/02	05:37:03	71.495
07/24/02	05:38:03	70.557
07/24/02	05:39:03	69.618
07/24/02	05:40:03	70.983
07/24/02	05:41:03	71.040
07/24/02	05:42:03	71.040
07/24/02	05:43:03	69.931
07/24/02	05:44:03	71.040
07/24/02	05:45:03	70.016
07/24/02	05:46:03	70.073
07/24/02	05:47:03	72.178
07/24/02	05:48:03	71.239
07/24/02	05:49:03	70.016

WEST AND UHLAND - NO. 7565 cont.

Date	Time	Pres (PSI)
07/24/02	05:50:03	70.983
07/24/02	05:51:03	72.178
07/24/02	05:52:03	71.922
07/24/02	05:53:03	71.353
07/24/02	05:54:03	71.979
07/24/02	05:55:03	72.490
07/24/02	05:56:03	71.552
07/24/02	05:57:03	71.979
07/24/02	05:58:03	72.121
07/24/02	05:59:03	70.187
07/24/02	06:00:03	71.182
07/24/02	06:01:03	70.073
07/24/02	06:02:03	70.613
07/24/02	06:03:03	69.021
07/24/02	06:04:03	70.756
07/24/02	06:05:03	70.756
07/24/02	06:06:03	70.500
07/24/02	06:07:03	69.959
07/24/02	06:08:03	71.068
07/24/02	06:09:03	69.959
07/24/02	06:10:03	69.874
07/24/02	06:11:03	70.386
07/24/02	06:12:03	69.817
07/24/02	06:13:03	69.561
07/24/02	06:14:03	69.391
07/24/02	06:15:03	68.509
07/24/02	06:16:03	69.391
07/24/02	06:17:03	69.931
07/24/02	06:18:03	69.135
07/24/02	06:19:03	71.353
07/24/02	06:20:03	69.021
07/24/02	06:21:03	69.647
07/24/02	06:22:03	69.447
07/24/02	06:23:03	68.822
07/24/02	06:24:03	67.855
07/24/02	06:25:03	69.078
07/24/02	06:26:03	69.959
07/24/02	06:27:03	68.395
07/24/02	06:28:03	69.248
07/24/02	06:29:03	66.490
07/24/02	06:30:03	69.192
07/24/02	06:31:03	66.490
07/24/02	06:32:03	68.537
07/24/02	06:33:03	69.248
07/24/02	06:34:03	68.395
07/24/02	06:35:03	69.647
07/24/02	06:36:03	69.391
07/24/02	06:37:03	68.225
07/24/02	06:38:03	68.879
07/24/02	06:39:03	67.855
07/24/02	06:40:03	68.907
07/24/02	06:41:03	68.651
07/24/02	06:42:03	68.537
07/24/02	06:43:03	68.765
07/24/02	06:44:03	68.822
07/24/02	06:45:03	68.281
07/24/02	06:46:03	69.021
07/24/02	06:47:03	68.907
07/24/02	06:48:03	69.021
07/24/02	06:49:03	70.386
07/24/02	06:50:03	68.168
07/24/02	06:51:03	68.168
07/24/02	06:52:03	66.860
07/24/02	06:53:03	66.660
07/24/02	06:54:03	66.547
07/24/02	06:55:03	67.656
07/24/02	06:56:03	68.537
07/24/02	06:57:03	65.978
07/24/02	06:58:03	66.604
07/24/02	06:59:03	66.973
07/24/02	07:00:03	67.969
07/24/02	07:01:03	66.973
07/24/02	07:02:03	65.551
07/24/02	07:03:03	67.542
07/24/02	07:04:03	65.750
07/24/02	07:05:03	66.376
07/24/02	07:06:03	65.324
07/24/02	07:07:03	67.485
07/24/02	07:08:03	68.281
07/24/02	07:09:03	67.770
07/24/02	07:10:03	65.694
07/24/02	07:11:03	65.978
07/24/02	07:12:03	64.442
07/24/02	07:13:03	66.291
07/24/02	07:14:03	65.125
07/24/02	07:15:03	64.272
07/24/02	07:16:03	63.504
07/24/02	07:17:03	64.073
07/24/02	07:18:03	62.963
07/24/02	07:19:03	64.215
07/24/02	07:20:03	63.959
07/24/02	07:21:03	65.807
07/24/02	07:22:03	61.911
07/24/02	07:23:03	64.016
07/24/02	07:24:03	64.016
07/24/02	07:25:03	61.598
07/24/02	07:26:03	63.589
07/24/02	07:27:03	63.703
07/24/02	07:28:03	64.016
07/24/02	07:29:03	64.186
07/24/02	07:30:03	62.764
07/24/02	07:31:03	63.020
07/24/02	07:32:03	64.926
07/24/02	07:33:03	65.438
07/24/02	07:34:03	63.504
07/24/02	07:35:03	66.177
07/24/02	07:36:03	62.423
07/24/02	07:37:03	64.186
07/24/02	07:38:03	64.499
07/24/02	07:39:03	64.328
07/24/02	07:40:03	65.324
07/24/02	07:41:03	67.087
07/24/02	07:42:03	67.912
07/24/02	07:43:03	66.348
07/24/02	07:44:03	66.063
07/24/02	07:45:03	66.376
07/24/02	07:46:03	66.433
07/24/02	07:47:03	65.694
07/24/02	07:48:03	66.604
07/24/02	07:49:03	65.864
07/24/02	07:50:03	68.225
07/24/02	07:51:03	67.172
07/24/02	07:52:03	67.457
07/24/02	07:53:03	65.864
07/24/02	07:54:03	68.395
07/24/02	07:55:03	68.225
07/24/02	07:56:03	68.594
07/24/02	07:57:03	66.973
07/24/02	07:58:03	66.547
07/24/02	07:59:03	67.912
07/24/02	08:00:03	68.708
07/24/02	08:01:03	70.130
07/24/02	08:02:03	67.087
07/24/02	08:03:03	65.438
07/24/02	08:04:03	64.926
07/24/02	08:05:03	65.324
07/24/02	08:06:03	64.272
07/24/02	08:07:03	63.902
07/24/02	08:08:03	65.381
07/24/02	08:09:03	66.177
07/24/02	08:10:03	66.120
07/24/02	08:11:03	66.916
07/24/02	08:12:03	64.812
07/24/02	08:13:03	63.646
07/24/02	08:14:03	67.030
07/24/02	08:15:03	64.755
07/24/02	08:16:03	65.381
07/24/02	08:17:03	64.215
07/24/02	08:18:03	64.641
07/24/02	08:19:03	63.333
07/24/02	08:20:03	63.646
07/24/02	08:21:03	64.442
07/24/02	08:22:03	64.328
07/24/02	08:23:03	48.147
07/24/02	08:24:03	50.166
07/24/02	08:25:03	49.938
07/24/02	08:26:03	49.114
07/24/02	08:27:03	48.801
07/24/02	08:28:03	47.635
07/24/02	08:29:03	57.276
07/24/02	08:30:03	64.328
07/24/02	08:31:03	61.968
07/24/02	08:32:03	60.973
07/24/02	08:33:03	58.442
07/24/02	08:34:03	60.631
07/24/02	08:35:03	62.025
07/24/02	08:36:03	61.428
07/24/02	08:37:03	59.579
07/24/02	08:38:03	59.209
07/24/02	08:39:03	59.949
07/24/02	08:40:03	60.319
07/24/02	08:41:03	58.527
07/24/02	08:42:03	60.631
07/24/02	08:43:03	58.840
07/24/02	08:44:03	60.063
07/24/02	08:45:03	60.319
07/24/02	08:46:03	48.147
07/24/02	08:47:03	47.891
07/24/02	08:48:03	47.948
07/24/02	08:49:03	46.042
07/24/02	08:50:03	46.213
07/24/02	08:51:03	46.640
07/24/02	08:52:03	49.427
07/24/02	08:53:03	48.431
07/24/02	08:54:03	57.901
07/24/02	08:55:03	53.891
07/24/02	08:56:03	56.337
07/24/02	08:57:03	56.423
07/24/02	08:58:03	59.864
07/24/02	08:59:03	60.916
07/24/02	09:00:03	60.973
07/24/02	09:01:03	61.286
07/24/02	09:02:03	64.556
07/24/02	09:03:03	66.063
07/24/02	09:04:03	58.897
07/24/02	09:05:03	59.864
07/24/02	09:06:03	61.854
07/24/02	09:07:03	63.817
07/24/02	09:08:03	63.646
07/24/02	09:09:03	63.020
07/24/02	09:10:03	62.793
07/24/02	09:11:03	63.959
07/24/02	09:12:03	62.110
07/24/02	09:13:03	60.176
07/24/02	09:14:03	59.949
07/24/02	09:15:03	61.001
07/24/02	09:16:03	59.864
07/24/02	09:17:03	59.380
07/24/02	09:18:03	58.840
07/24/02	09:19:03	59.380
07/24/02	09:20:03	58.897
07/24/02	09:21:03	54.944
07/24/02	09:22:03	57.844
07/24/02	09:23:03	58.641
07/24/02	09:24:03	57.532
07/24/02	09:25:03	57.475
07/24/02	09:26:03	57.475
07/24/02	09:27:03	55.541
07/24/02	09:28:03	40.184
07/24/02	09:29:03	40.468
07/24/02	09:30:03	41.777
07/24/02	09:31:03	41.720
07/24/02	09:32:03	40.411
07/24/02	09:33:03	50.109
07/24/02	09:34:03	58.527
07/24/02	09:35:03	58.214
07/24/02	09:36:03	58.641
07/24/02	09:37:03	59.494
07/24/02	09:38:03	59.437
07/24/02	09:39:03	60.176
07/24/02	09:40:03	58.811
07/24/02	09:41:03	59.920
07/24/02	09:42:03	58.157
07/24/02	09:43:03	62.537
07/24/02	09:44:03	63.902
07/24/02	09:45:03	63.873
07/24/02	09:46:03	64.499
07/24/02	09:47:03	62.707
07/24/02	09:48:03	62.025
07/24/02	09:49:03	64.812
07/24/02	09:50:03	65.182
07/24/02	09:51:03	65.011
07/24/02	09:52:03	63.134
07/24/02	09:53:03	63.504
07/24/02	09:54:03	64.215
07/24/02	09:55:03	63.077
07/24/02	09:56:03	64.698
07/24/02	09:57:03	63.020
07/24/02	09:58:03	63.817
07/24/02	09:59:03	64.698
07/24/02	10:00:03	63.959
07/24/02	10:01:03	64.215
07/24/02	10:02:03	65.438
07/24/02	10:03:03	65.324
07/24/02	10:04:03	62.793
07/24/02	10:05:03	65.125
07/24/02	10:06:03	54.887
07/24/02	10:07:03	57.389
07/24/02	10:08:03	55.427
07/24/02	10:09:03	54.631
07/24/02	10:10:03	57.333
07/24/02	10:11:03	55.001
07/24/02	10:12:03	57.276
07/24/02	10:13:03	56.110

WEST AND UHLAND - NO. 7565 cont.

Date	Time	Pres (PSI)
07/24/02	10:14:03	57.276
07/24/02	10:15:03	55.854
07/24/02	10:16:03	42.459
07/24/02	10:17:03	41.151
07/24/02	10:18:03	42.630
07/24/02	10:19:03	43.142
07/24/02	10:20:03	43.142
07/24/02	10:21:03	41.350
07/24/02	10:22:03	51.730
07/24/02	10:23:03	56.650
07/24/02	10:24:03	62.651
07/24/02	10:25:03	66.547
07/24/02	10:26:03	64.812
07/24/02	10:27:03	63.447
07/24/02	10:28:03	62.594
07/24/02	10:29:03	63.504
07/24/02	10:30:03	63.276
07/24/02	10:31:03	64.328
07/24/02	10:32:03	64.641
07/24/02	10:33:03	63.020
07/24/02	10:34:03	64.926
07/24/02	10:35:03	62.594
07/24/02	10:36:03	62.707
07/24/02	10:37:03	62.907
07/24/02	10:38:03	61.911
07/24/02	10:39:03	63.276
07/24/02	10:40:03	63.219
07/24/02	10:41:03	61.854
07/24/02	10:42:03	64.016
07/24/02	10:43:03	63.760
07/24/02	10:44:03	63.504
07/24/02	10:45:03	62.110
07/24/02	10:46:03	63.817
07/24/02	10:47:03	61.797
07/24/02	10:48:03	61.712
07/24/02	10:49:03	64.129
07/24/02	10:50:03	63.873
07/24/02	10:51:03	62.423
07/24/02	10:52:03	62.338
07/24/02	10:53:03	61.911
07/24/02	10:54:03	61.371
07/24/02	10:55:03	60.916
07/24/02	10:56:03	60.120
07/24/02	10:57:03	58.840
07/24/02	10:58:03	63.447
07/24/02	10:59:03	64.641
07/24/02	11:00:03	61.598
07/24/02	11:01:03	27.244
07/24/02	11:02:03	33.728
07/24/02	11:03:03	18.059
07/24/02	11:04:03	24.116
07/24/02	11:05:03	22.694
07/24/02	11:06:03	22.609
07/24/02	11:07:03	23.604
07/24/02	11:08:03	23.064
07/24/02	11:09:03	24.116
07/24/02	11:10:03	23.547
07/24/02	11:11:03	23.234
07/24/02	11:12:03	21.585
07/24/02	11:13:03	21.813
07/24/02	11:14:03	21.756
07/24/02	11:15:03	20.163
07/24/02	11:16:03	15.215
07/24/02	11:17:03	16.011
07/24/02	11:18:03	15.584
07/24/02	11:19:03	16.267
07/24/02	11:20:03	16.494
07/24/02	11:21:03	16.210
07/24/02	11:22:03	22.268
07/24/02	11:23:03	24.173
07/24/02	11:24:03	31.197
07/24/02	11:25:03	36.402
07/24/02	11:26:03	39.302
07/24/02	11:27:03	42.317
07/24/02	11:28:03	50.735
07/24/02	11:29:03	58.897
07/24/02	11:30:03	59.437
07/24/02	11:31:03	60.631
07/24/02	11:32:03	57.333
07/24/02	11:33:03	58.811
07/24/02	11:34:03	63.276
07/24/02	11:35:03	60.631
07/24/02	11:36:03	61.712
07/24/02	11:37:03	61.797
07/24/02	11:38:03	62.110
07/24/02	11:39:03	61.428
07/24/02	11:40:03	60.916
07/24/02	11:41:03	60.319
07/24/02	11:42:03	60.802
07/24/02	11:43:03	62.281
07/24/02	11:44:03	61.854
07/24/02	11:45:03	61.172
07/24/02	11:46:03	61.342
07/24/02	11:47:03	61.172
07/24/02	11:48:03	60.063
07/24/02	11:49:03	62.651
07/24/02	11:50:03	62.963
07/24/02	11:51:03	62.224
07/24/02	11:52:03	63.276
07/24/02	11:53:03	63.219
07/24/02	11:54:03	62.963
07/24/02	11:55:03	63.817
07/24/02	11:56:03	61.854
07/24/02	11:57:03	61.712
07/24/02	11:58:03	62.707
07/24/02	11:59:03	64.926
07/24/02	12:00:03	57.276
07/24/02	12:01:03	58.527
07/24/02	12:02:03	61.001
07/24/02	12:03:03	62.594
07/24/02	12:04:03	60.603
07/24/02	12:05:03	62.793
07/24/02	12:06:03	60.631
07/24/02	12:07:03	57.105
07/24/02	12:08:03	60.063
07/24/02	12:09:03	61.911
07/24/02	12:10:03	63.504
07/24/02	12:11:03	47.208
07/24/02	12:12:03	44.677
07/24/02	12:13:03	45.530
07/24/02	12:14:03	46.213
07/24/02	12:15:03	47.208
07/24/02	12:16:03	37.880
07/24/02	12:17:03	27.813
07/24/02	12:18:03	43.739
07/24/02	12:19:03	46.355
07/24/02	12:20:03	52.896
07/24/02	12:21:03	63.077
07/24/02	12:22:03	63.134
07/24/02	12:23:03	61.911
07/24/02	12:24:03	59.693
07/24/02	12:25:03	60.603
07/24/02	12:26:03	60.120
07/24/02	12:27:03	59.437
07/24/02	12:28:03	60.375
07/24/02	12:29:03	62.594
07/24/02	12:30:03	61.001
07/24/02	12:31:03	60.319
07/24/02	12:32:03	62.167
07/24/02	12:33:03	61.001
07/24/02	12:34:03	62.423
07/24/02	12:35:03	60.916
07/24/02	12:36:03	61.286
07/24/02	12:37:03	61.797
07/24/02	12:38:03	60.120
07/24/02	12:39:03	60.120
07/24/02	12:40:03	60.631
07/24/02	12:41:03	60.319
07/24/02	12:42:03	61.058
07/24/02	12:43:03	59.067
07/24/02	12:44:03	57.475
07/24/02	12:45:03	59.494
07/24/02	12:46:03	60.603
07/24/02	12:47:03	62.224
07/24/02	12:48:03	60.176
07/24/02	12:49:03	61.115
07/24/02	12:50:03	59.181
07/24/02	12:51:03	59.181
07/24/02	12:52:03	60.432
07/24/02	12:53:03	60.120
07/24/02	12:54:03	58.271
07/24/02	12:55:03	58.954
07/24/02	12:56:03	60.375
07/24/02	12:57:03	60.006
07/24/02	12:58:03	58.840
07/24/02	12:59:03	59.693
07/24/02	13:00:03	57.645
07/24/02	13:01:03	57.333
07/24/02	13:02:03	57.645
07/24/02	13:03:03	56.053
07/24/02	13:04:03	57.105
07/24/02	13:05:03	57.219
07/24/02	13:06:03	58.157
07/24/02	13:07:03	55.057
07/24/02	13:08:03	56.792
07/24/02	13:09:03	57.475
07/24/02	13:10:03	56.849
07/24/02	13:11:03	56.593
07/24/02	13:12:03	58.271
07/24/02	13:13:03	55.683
07/24/02	13:14:03	57.702
07/24/02	13:15:03	57.788
07/24/02	13:16:03	56.280
07/24/02	13:17:03	58.385
07/24/02	13:18:03	59.181
07/24/02	13:19:03	58.442
07/24/02	13:20:03	57.048
07/24/02	13:21:03	58.754
07/24/02	13:22:03	58.271
07/24/02	13:23:03	61.229
07/24/02	13:24:03	60.745
07/24/02	13:25:03	61.058
07/24/02	13:26:03	62.224
07/24/02	13:27:03	58.584
07/24/02	13:28:03	58.214
07/24/02	13:29:03	58.811
07/24/02	13:30:03	58.584
07/24/02	13:31:03	59.067
07/24/02	13:32:03	60.745
07/24/02	13:33:03	62.707
07/24/02	13:34:03	61.371
07/24/02	13:35:03	62.651
07/24/02	13:36:03	63.219
07/24/02	13:37:03	-0.313
07/24/02	13:38:03	-0.313
07/24/02	13:39:03	-0.341
07/24/02	13:40:03	-0.398
07/24/02	13:41:03	-0.341
07/24/02	13:42:03	-0.341
07/24/02	13:43:03	-0.341
07/24/02	13:44:03	-0.341
07/24/02	13:45:03	-0.341
07/24/02	13:46:03	-0.341
07/24/02	13:47:03	-0.313
07/24/02	13:48:03	-0.313
07/24/02	13:49:03	-0.341
07/24/02	13:50:03	-0.341
07/24/02	13:51:03	-0.341
07/24/02	13:52:03	-0.341
07/24/02	13:53:03	-0.341
07/24/02	13:54:03	-0.341
07/24/02	13:55:03	-0.398
07/24/02	13:56:03	-0.398
07/24/02	13:57:03	-0.341
07/24/02	13:58:03	-0.341
07/24/02	13:59:03	-0.341
07/24/02	14:00:03	-0.341
07/24/02	14:01:03	-0.341
07/24/02	14:02:03	-0.341
07/24/02	14:03:03	-0.341
07/24/02	14:04:03	-0.341
07/24/02	14:05:03	-0.398
07/24/02	14:06:03	-0.398
07/24/02	14:07:03	-0.398
07/24/02	14:08:03	-0.398
07/24/02	14:09:03	-0.398
07/24/02	14:10:03	-0.341
07/24/02	14:11:03	-0.341
07/24/02	14:12:03	-0.341
07/24/02	14:13:03	-0.341
07/24/02	14:14:03	-0.341
07/24/02	14:15:03	-0.341
07/24/02	14:16:03	-0.341
07/24/02	14:17:03	-0.341
07/24/02	14:18:03	-0.398
07/24/02	14:19:03	-0.341
07/24/02	14:20:03	-0.341
07/24/02	14:21:03	-0.341
07/24/02	14:22:03	-0.341
07/24/02	14:23:03	-0.341
07/24/02	14:24:03	-0.341
07/24/02	14:25:03	-0.341
07/24/02	14:26:03	-0.398
07/24/02	14:27:03	-0.341
07/24/02	14:28:03	-0.398
07/24/02	14:29:03	-0.398
07/24/02	14:30:03	-0.398
07/24/02	14:31:03	-0.398
07/24/02	14:32:03	-0.398
07/24/02	14:33:03	-0.398
07/24/02	14:34:03	-0.398
07/24/02	14:35:03	-0.398
07/24/02	14:36:03	-0.455
07/24/02	14:37:03	-0.455

WEST AND UHLAND - NO. 7565 cont.

Date	Time	Pres (PSI)
07/24/02	14:38:03	-0.455
07/24/02	14:39:03	-0.455
07/24/02	14:40:03	-0.455
07/24/02	14:41:03	-0.455
07/24/02	14:42:03	-0.455
07/24/02	14:43:03	-0.512
07/24/02	14:44:03	-0.455
07/24/02	14:45:03	-0.455
07/24/02	14:46:03	-0.455
07/24/02	14:47:03	-0.455
07/24/02	14:48:03	-0.512
07/24/02	14:49:03	-0.455
07/24/02	14:50:03	-0.455
07/24/02	14:51:03	-0.512
07/24/02	14:52:03	-0.512
07/24/02	14:53:03	-0.512
07/24/02	14:54:03	-0.512
07/24/02	14:55:03	-0.512
07/24/02	14:56:03	-0.455
07/24/02	14:57:03	-0.455
07/24/02	14:58:03	-0.455
07/24/02	14:59:03	-0.455
07/24/02	15:00:03	-0.512
07/24/02	15:01:03	-0.512
07/24/02	15:02:03	-0.512
07/24/02	15:03:03	-0.455
07/24/02	15:04:03	-0.512
07/24/02	15:05:03	-0.455
07/24/02	15:06:03	-0.455
07/24/02	15:07:03	-0.455
07/24/02	15:08:03	-0.455
07/24/02	15:09:03	-0.455
07/24/02	15:10:03	-0.398
07/24/02	15:11:03	-0.455
07/24/02	15:12:03	-0.398
07/24/02	15:13:03	-0.398
07/24/02	15:14:03	-0.455
07/24/02	15:15:03	-0.455
07/24/02	15:16:03	-0.455
07/24/02	15:17:03	-0.455
07/24/02	15:18:03	-0.455
07/24/02	15:19:03	-0.455
07/24/02	15:20:03	-0.398
07/24/02	15:21:03	-0.455
07/24/02	15:22:03	-0.455
07/24/02	15:23:03	-0.455
07/24/02	15:24:03	-0.455
07/24/02	15:25:03	-0.512
07/24/02	15:26:03	-0.512
07/24/02	15:27:03	-0.512
07/24/02	15:28:03	-0.512
07/24/02	15:29:03	-0.512
07/24/02	15:30:03	-0.455
07/24/02	15:31:03	-0.512
07/24/02	15:32:03	-0.455
07/24/02	15:33:03	-0.512
07/24/02	15:34:03	-0.512
07/24/02	15:35:03	-0.512
07/24/02	15:36:03	-0.512
07/24/02	15:37:03	-0.569
07/24/02	15:38:03	-0.569
07/24/02	15:39:03	-0.512
07/24/02	15:40:03	-0.512
07/24/02	15:41:03	-0.512
07/24/02	15:42:03	-0.512
07/24/02	15:43:03	-0.512
07/24/02	15:44:03	-0.569
07/24/02	15:45:03	-0.569
07/24/02	15:46:03	-0.512
07/24/02	15:47:03	-0.512
07/24/02	15:48:03	-0.512
07/24/02	15:49:03	-0.512
07/24/02	15:50:03	-0.512
07/24/02	15:51:03	-0.569
07/24/02	15:52:03	-0.512
07/24/02	15:53:03	-0.569
07/24/02	15:54:03	-0.569
07/24/02	15:55:03	-0.512
07/24/02	15:56:03	-0.569
07/24/02	15:57:03	-0.569
07/24/02	15:58:03	-0.569
07/24/02	15:59:03	-0.569
07/24/02	16:00:03	-0.569
07/24/02	16:01:03	-0.569
07/24/02	16:02:03	-0.569
07/24/02	16:03:03	-0.569
07/24/02	16:04:03	-0.569
07/24/02	16:05:03	-0.569
07/24/02	16:06:03	-0.512
07/24/02	16:07:03	-0.569
07/24/02	16:08:03	-0.569
07/24/02	16:09:03	-0.569
07/24/02	16:10:03	-0.569
07/24/02	16:11:03	-0.569
07/24/02	16:12:03	-0.569

APPENDIX B

WELL AND PUMP STATION SCHEMATIC DRAWINGS

ALAN PLUMMER ASSOCIATES, INC.

ENVIRONMENTAL ENGINEERS • DESIGNERS • SCIENTISTS

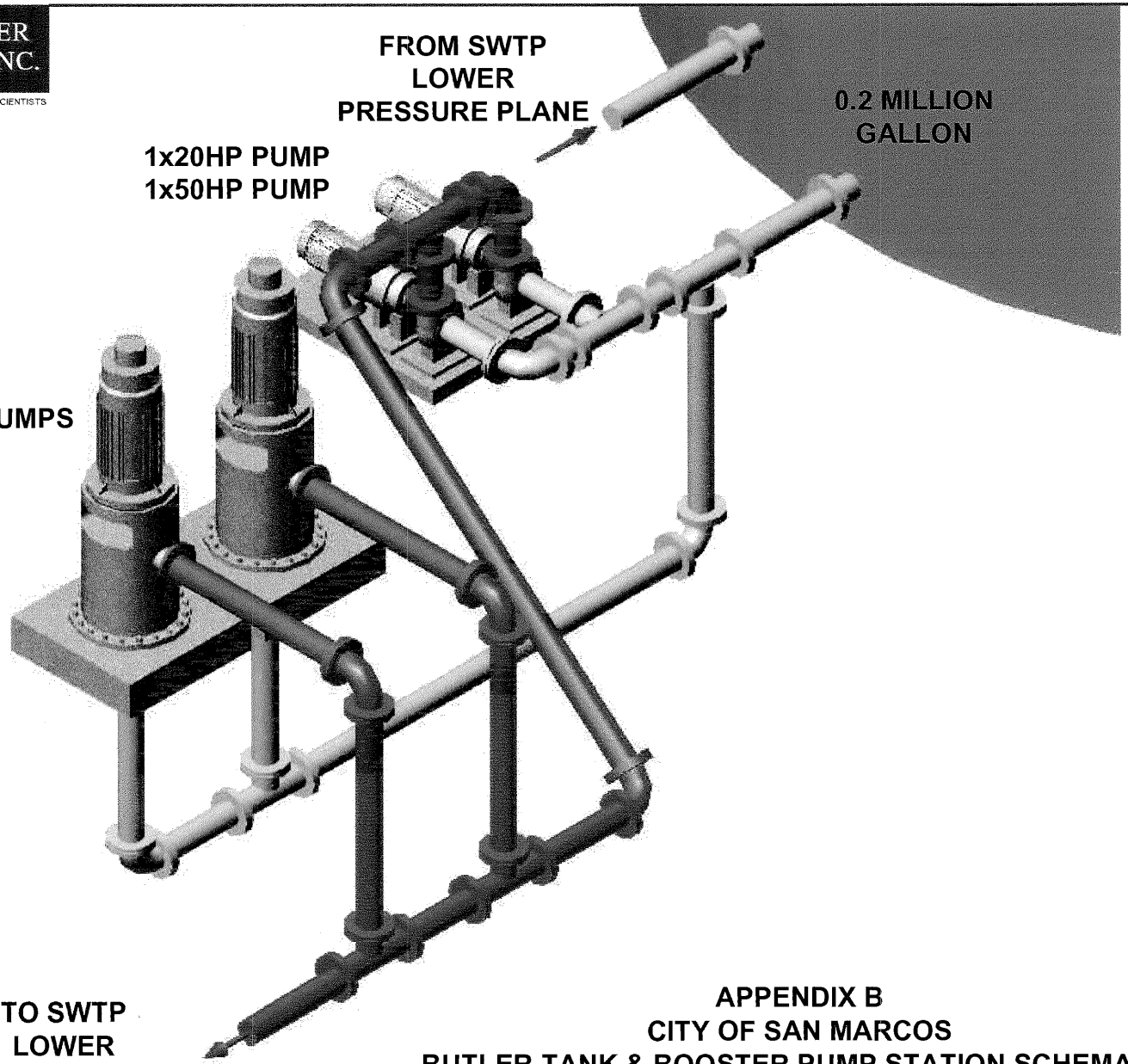

APPENDIX B
CITY OF SAN MARCOS
BUTLER TANK & BOOSTER PUMP STATION SCHEMATIC

M:\PROJECTS\6000800\ACAD\3D Figures\Butler.ppt

ALAN PLUMMER ASSOCIATES, INC.

ENVIRONMENTAL ENGINEERS • DESIGNERS • SCIENTISTS

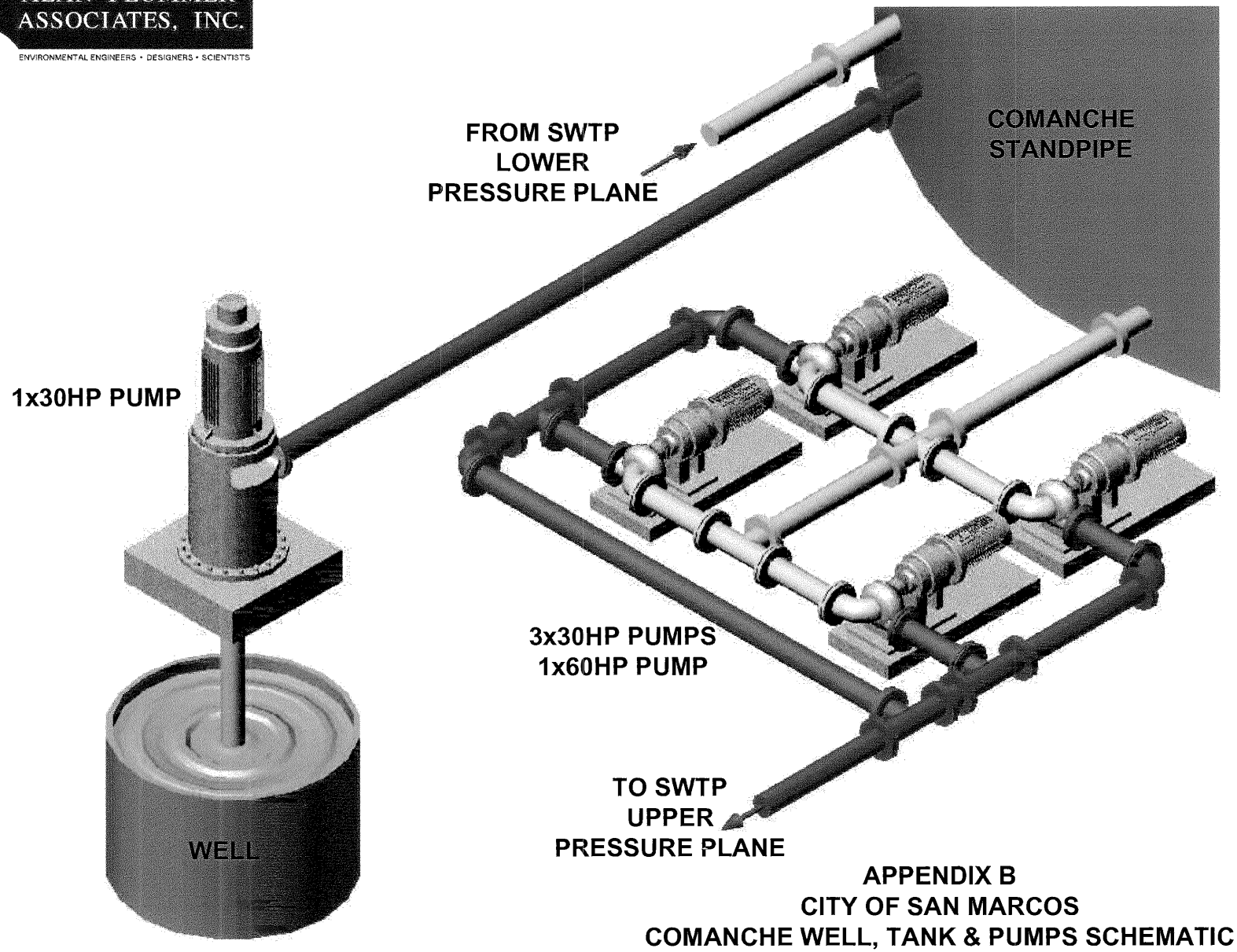

APPENDIX B
CITY OF SAN MARCOS
COMANCHE WELL, TANK & PUMPS SCHEMATIC

M:\PROJECTS\6000800\ACAD\3D Figures\Comanche.ppt

ALAN PLUMMER ASSOCIATES, INC.

ENVIRONMENTAL ENGINEERS • DESIGNERS • SCIENTISTS

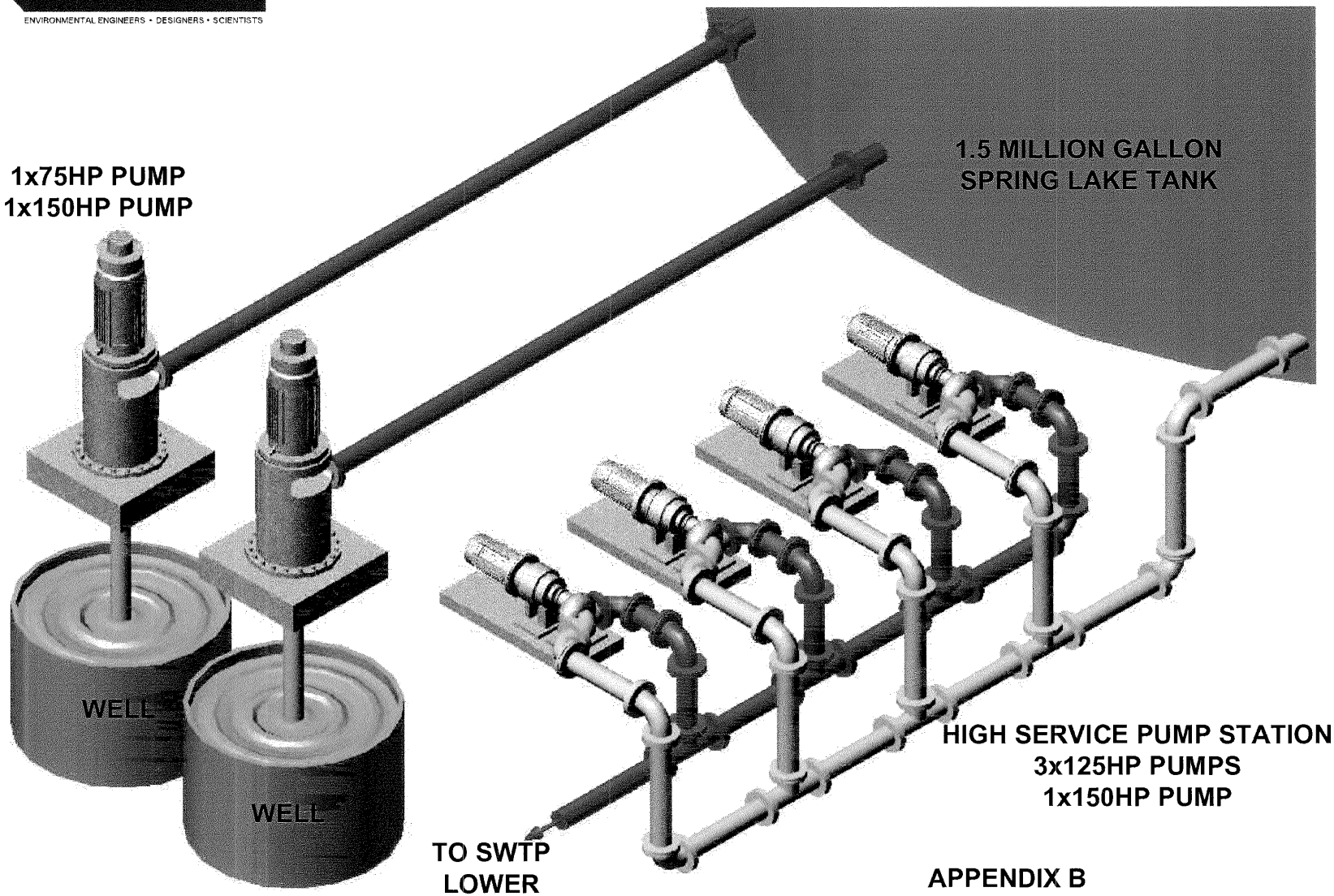

APPENDIX B
CITY OF SAN MARCOS
SPRING LAKE WELLS, TANK & PUMPS SCHEMATIC

M:\PROJECTS\6000800\ACAD\3D Figures\SpringLakee.ppt

ALAN PLUMMER ASSOCIATES, INC.

ENVIRONMENTAL ENGINEERS • DESIGNERS • SCIENTISTS

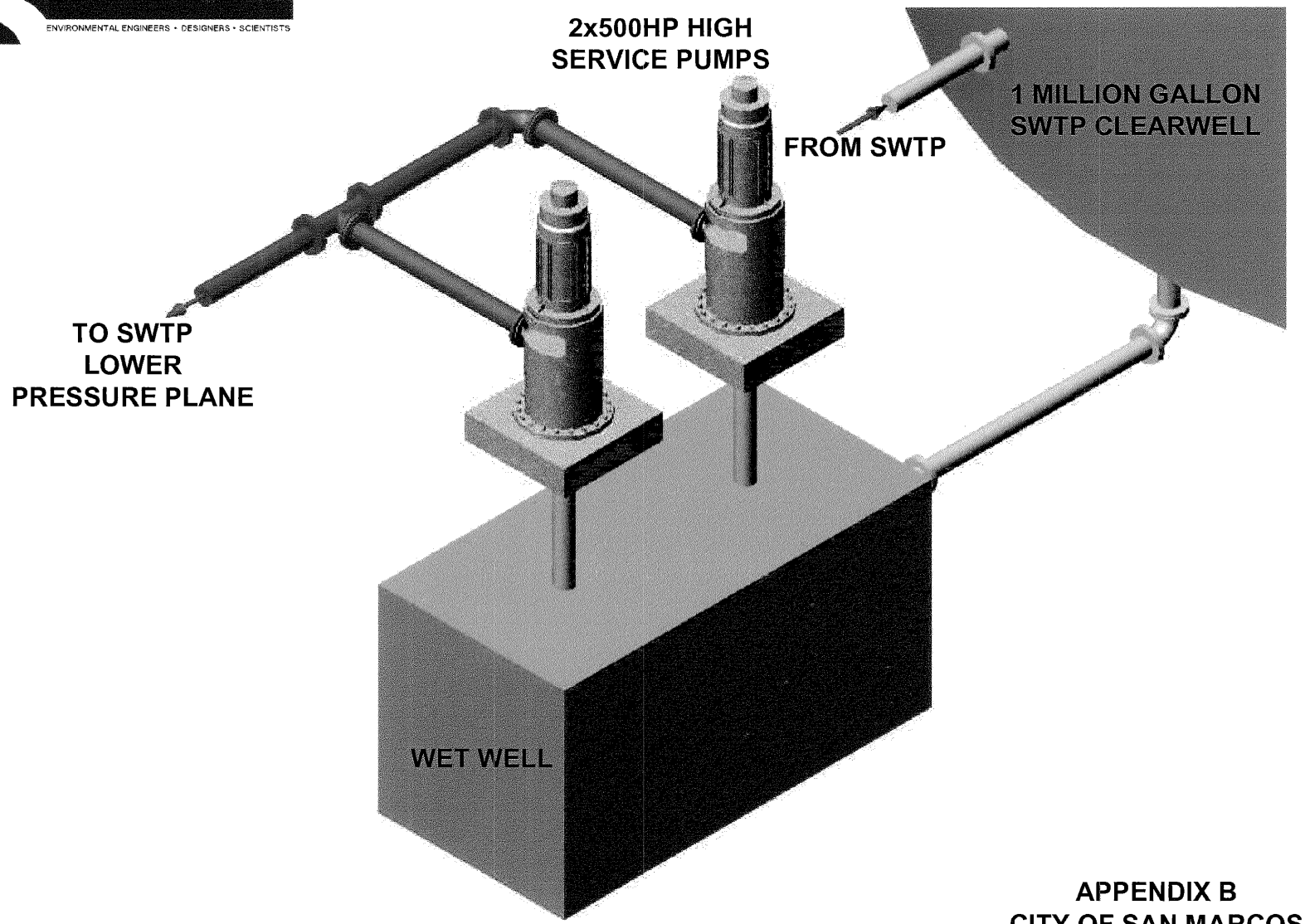

APPENDIX B
CITY OF SAN MARCOS
SWTP TANK & PUMPS SCHEMATIC

M:\PROJECTS\600800\ACAD\3D Figures\SWTP.ppt

ALAN PLUMMER ASSOCIATES, INC.

ENVIRONMENTAL ENGINEERS • DESIGNERS • SCIENTISTS

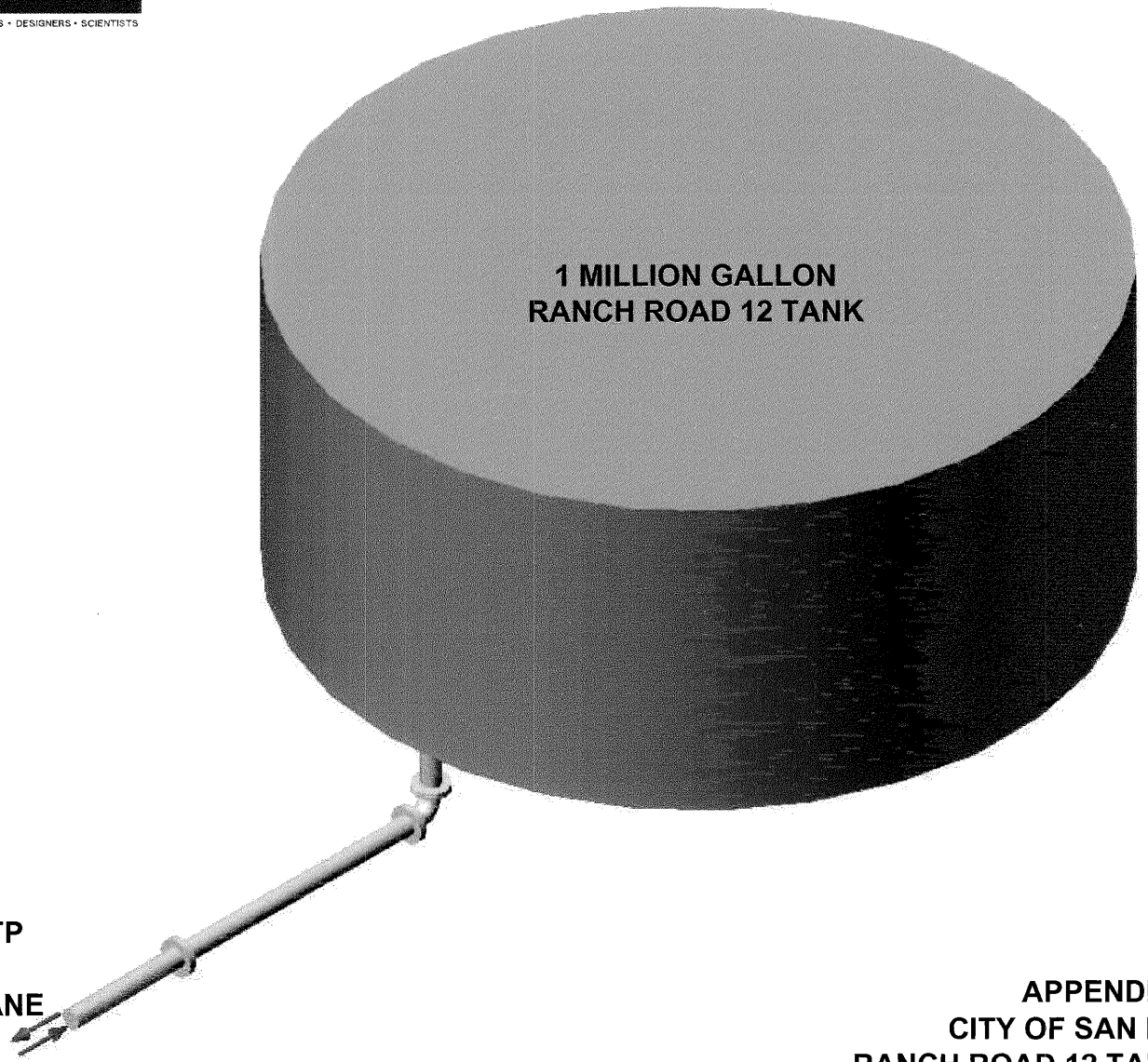

APPENDIX B
CITY OF SAN MARCOS
RANCH ROAD 12 TANK SCHEMATIC

M:\PROJECTS\6000800\ACAD\3D Figures\RR12.ppt

ALAN PLUMMER ASSOCIATES, INC.

ENVIRONMENTAL ENGINEERS • DESIGNERS • SCIENTISTS

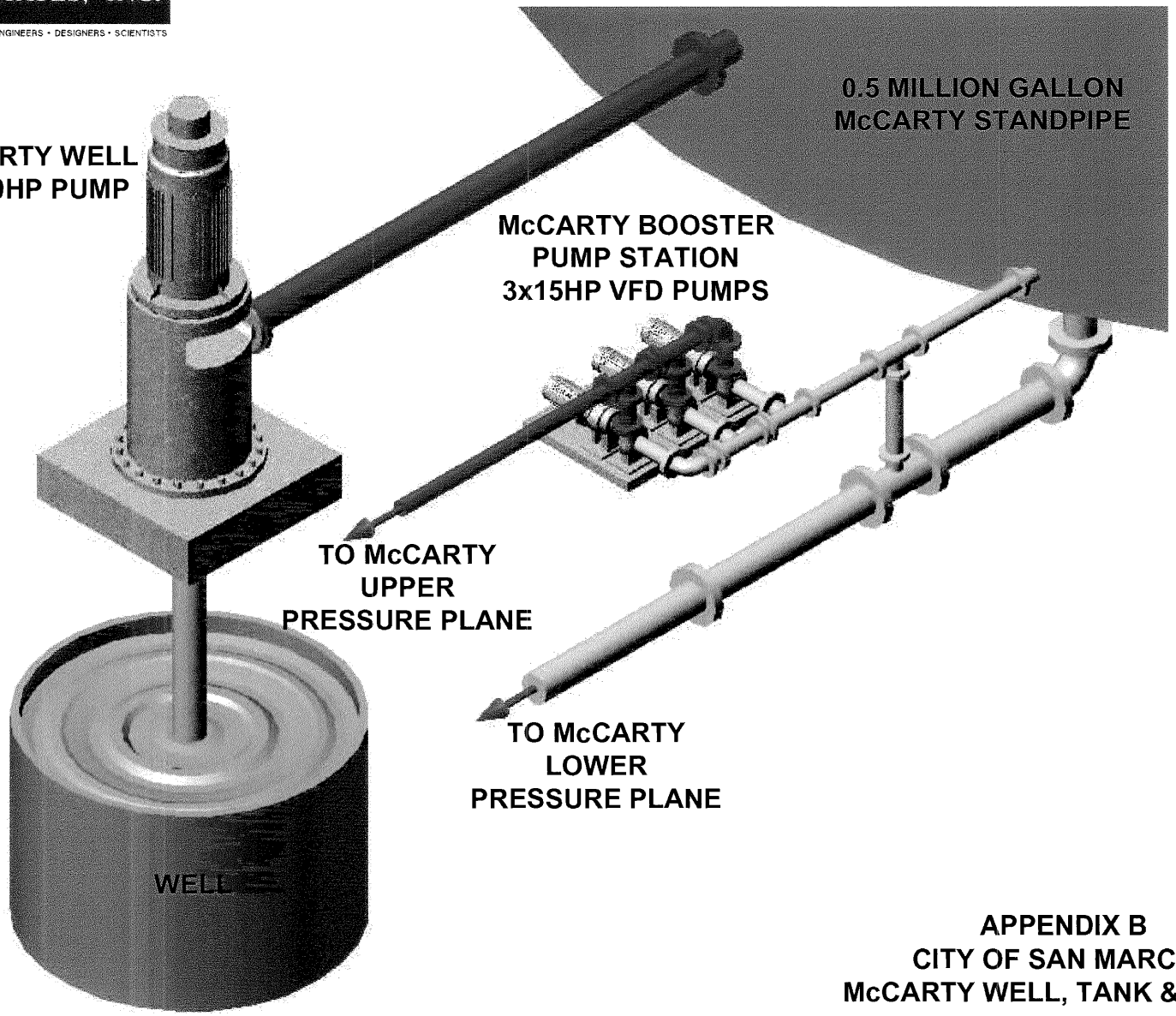

APPENDIX B
CITY OF SAN MARCOS
McCARTY WELL, TANK & PUMPS

M:\PROJECTS\6000800\ACAD\3D Figures\McCARTY.ppt

ALAN PLUMMER ASSOCIATES, INC.

ENVIRONMENTAL ENGINEERS • DESIGNERS • SCIENTISTS

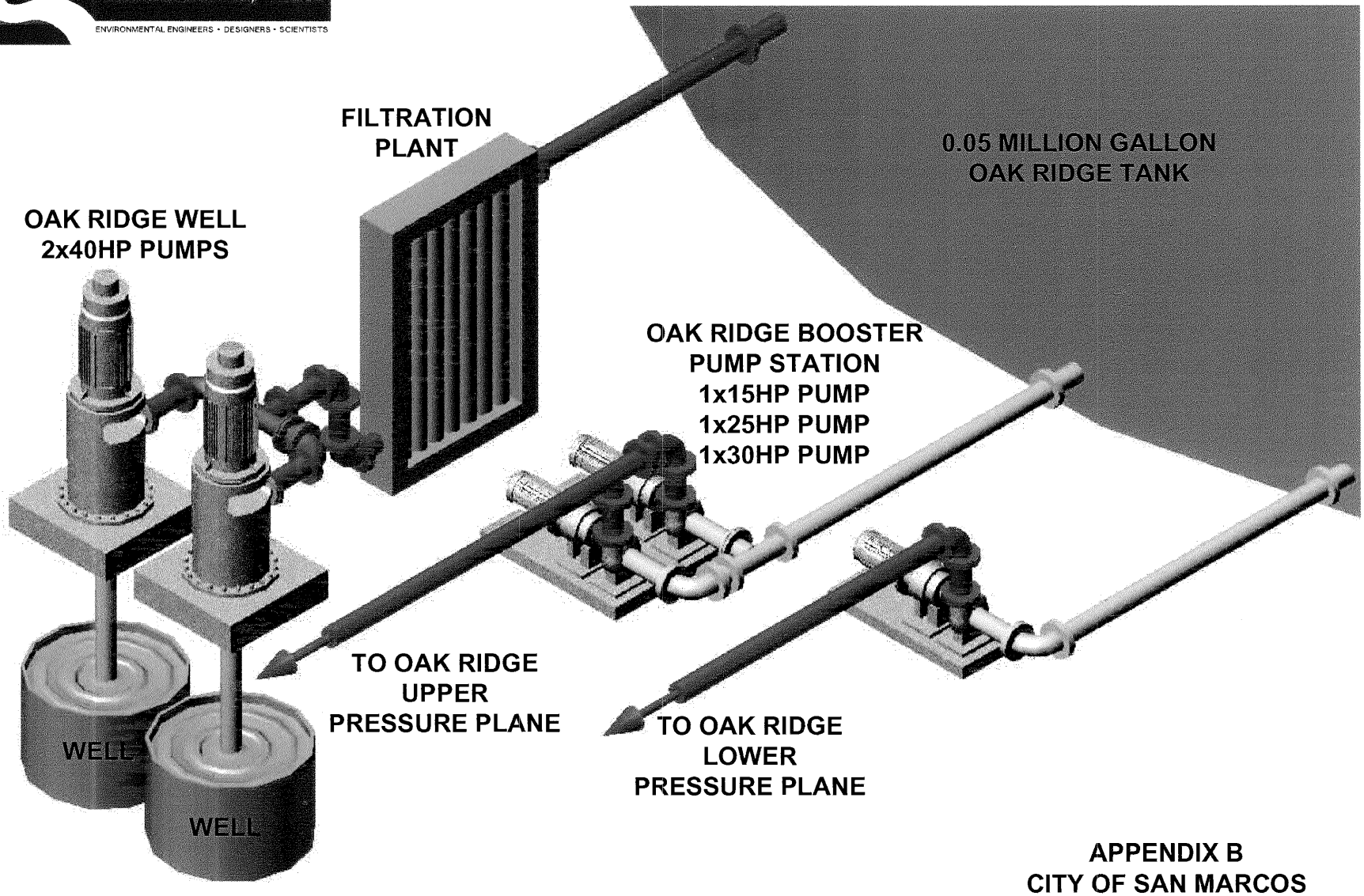

APPENDIX B
CITY OF SAN MARCOS
OAK RIDGE WELL, TANK & PUMPS

M:\PROJECTS\6000800\ACAD\3D Figures\OakRidge.ppt

ALAN PLUMMER ASSOCIATES, INC.

ENVIRONMENTAL ENGINEERS • DESIGNERS • SCIENTISTS

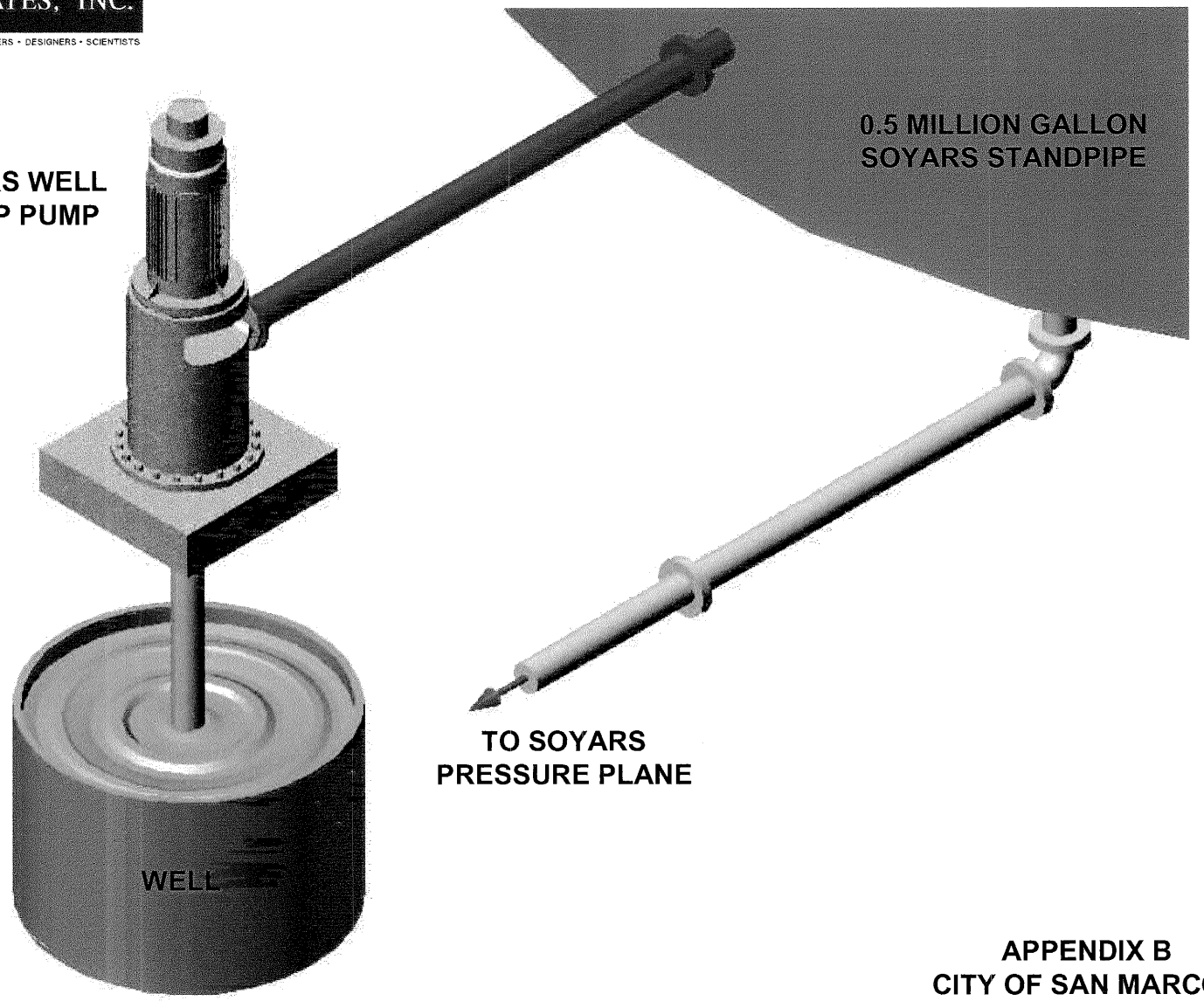

APPENDIX B
CITY OF SAN MARCOS
SOYARS WELL & TANK

M:\PROJECTS\6000800\ACAD\3D Figures\Soyars.ppt

APPENDIX C
CITY OF SAN MARCOS
CAMPO TSZ DATA

	CAMPO PROJECTED POPULATION			
TSZ	**2000**	**2007**	**2017**	**2027**
577	1,076	4,160	4,560	7,920
578	3,334	3,398	4,320	6,672
579	691	1,558	2,160	3,392
580	0	1,500	2,400	3,632
581	392	376	576	2,480
582	917	805	955	1,963
583	1,981	2,224	3,024	4,648
584	198	179	179	1,691
585	1,034	825	1,125	1,125
586	31	27	3,527	4,479
587	1	0	0	0
588	13	182	482	1,244
589	746	2,699	4,999	5,811
590	3,018	2,688	3,188	3,748
591	200	3,360	5,260	6,716
666	489	3,196	6,696	7,928
667	492	1,297	1,797	2,189
668	501	691	1,441	3,625
669	48	238	538	1,882
670	201	623	823	823
671	208	366	466	1,832
672	958	996	1,096	1,264
673	1,071	779	809	977
674	636	530	580	692
675	203	200	500	836
676	1,238	1,872	2,372	3,268
677	374	359	509	621
678	325	1,062	1,262	1,262
679	729	673	1,173	1,845
680	46	338	838	2,462
681	36	185	185	241
682	259	347	407	407
683	150	150	150	150
684	1,248	1,248	1,248	1,448
685	559	843	1,643	3,883
686	987	837	2,337	5,025
687	780	582	1,382	3,566
688	302	990	1,090	1,650
689	277	240	290	402
690	33	30	80	102
691	0	14	64	120
692	89	650	2,428	3,772
693	642	630	730	786
694	60	297	1,047	1,887
695	221	163	313	1,993

APPENDIX C
CITY OF SAN MARCOS
CAMPO TSZ DATA

	CAMPO PROJECTED POPULATION			
TSZ	**2000**	**2007**	**2017**	**2027**
833	98	965	1,965	2,097
834	18	73	123	490
835	595	1,743	1,743	2,023
836	479	478	578	1,194
837	44	604	1,204	1,431
838	1,558	788	938	1,610
839	68	90	140	364
840	619	718	738	738
841	114	210	410	770
842	464	652	752	976
843	72	190	190	190
844	85	152	802	1,138
845	291	737	4,537	5,097
848	334	3,200	4,700	5,876
892	0	4	4	4
893	516	516	516	615
894	5	5	5	5
895	1	37	37	67
896	5	10	160	720
897	0	0	0	0
898	0	0	0	0
899	0	0	0	0
900	6	36	36	36
901	0	0	0	0
902	73	55	55	55
903	311	245	245	245
904	0	0	0	0
905	311	254	254	254
906	0	0	0	0
907	4	42	42	154
908	14	43	43	43
909	0	0	0	0
910	28	28	28	28
911	19	50	50	50
912	12	91	91	91
913	0	156	156	156
914	117	481	1,361	1,809
915	0	0	0	0
916	123	180	180	292
917	326	391	455	455
918	251	306	316	372
919	1	0	0	0
920	3	6	236	348
921	1,511	1,572	1,572	1,772
922	339	432	732	1,236
1043	23	127	2,027	2,527

APPENDIX C

CAMPO TSZ DATA

APPENDIX D

PROJECT RELATED TECHNICAL MEMORANDA

ALAN PLUMMER
ASSOCIATES, INC.
ENVIRONMENTAL ENGINEERS • DESIGNERS • SCIENTISTS

JAMES L. ALTSTAETTER, P.E.
JEFFREY E. CAFFEY, P.E.
STEPHEN J. COONAN, P.E.
PEGGY W. GLASS, Ph.D.
DAVID A. GUDAL, P.E.
A. LEE HEAD, III, P.E.
BETTY L. JORDAN, P.E.
CLETUS R. MARTIN, P.E.
LORETTA E. MOKRY
MARK A. PERKINS, P.E.
ALAN H. PLUMMER, JR., P.E., DEE
RICHARD H. SMITH, P.E.
ALAN R. TUCKER, P.E.
P. JONATHAN YOUNG, Ph.D., P.E.

600-0800

October 15, 2002

Mr. James Klein, P.E.
Senior Engineer
Department of Environment and Engineering
City of San Marcos
630 East Hopkins
San Marcos, TX 78666

Re: City of San Marcos
Water Master Plan
Review of Cottonwood Creek Request for Service

Dear Mr. Klein:

We have completed our review of the Request for Water Service for the Cottonwood Creek Development and the City's ability to provide the requested service. As you are aware, we have not completed the calibration of the distribution model and have not evaluated alternative improvements necessary to meet the projected growth. As a result, our findings should be considered preliminary.

Cottonwood Creek Service Request

The developer of Cottonwood Creek has indicated that the development will contain 316 acres of residential development, 5 acres of neighborhood business, and 24 acres of public uses. The developer's engineer has indicated that the water demands for the entire development will be equivalent to 1,903 dwelling units. Based on an average flow of 300 gallons per day (gpd), a peak day flow of 1.1 gallons per minute (gpm), and a peak hour demand of 1.9 gpm per dwelling unit, the engineer has determined the peak water demand for the development to be 3,611 gpm. The fire flow requirement for the development is identified as 2,500 gpm.

The peaking factors used by the developer's engineer (5.28 peak day to average day, and 1.72 peak hour to peak day) are significantly higher than historical data for the City as a whole (1.66 peak day to average day, and 1.33 peak hour to peak day). While peaking factors for individual developments will be higher than those experienced for the City as a whole, the peaking factors utilized by the developer's

6300 LA CALMA
SUITE 400
AUSTIN, TEXAS 78752-3825
PHONE 512-452-5905
FAX 512-452-2325

engineer appear to be overly conservative, resulting in extremely high peak water demands.

We conducted a review of available data for a random sample of residential water accounts within the City to compare the peaking factors for individual residential accounts to those supplied by the developer. Based on a random sample of 20 residences, the average daily demand for a dwelling unit is 350 gpd. The ratio between the average daily demand and the daily demand during the peak month was 2.05. In order to determine the peak daily demand for these residences, the ratio between peak monthly demand and the peak day demand within the peak month was calculated for the system as a whole and then applied to the individual residential data. This ratio was calculated to be 1.4, which results in an overall peak day to average day ratio of 2.87 (0.70 gpm). The peak hour demand was assumed to be 1.5 times the peak day demand, which is slightly higher than the ratio for the system as a whole. This results in a peak hour demand of 1.05 gpm, as compared to the 1.9 gpm identified by the developer. This would result in a peak hour demand of approximately 2,000 gpm.

Existing System Limitations

The existing distribution system contains a 12-inch line that dead-ends in the vicinity of Highway 123 and Clovis Barker Road. The City is in the process of closing the loop between this line and a 12-inch line at Highway 123 and Wonderworld Drive. A review of pressure recording data obtained in support of the Water System Master Plan indicates that the minimum hydraulic grade line in the vicinity of Lago Vista and Crystal River Road was approximately 755 feet. A fire hydrant flow test was conducted at the end of the 12-inch line in Clovis Barker. A fire hydrant flow of 1,000 gpm at this location dropped the hydraulic grade line at Lago Vista and Crystal River to 730.

System Extension

In order to extend service to the Cottonwood Creek development, a line will need to be extended along Highway 123 from Clovis Barker Road. The line will be approximately 6,500 feet long to reach the center of the development. In addition to this transmission line, distribution lines throughout the development will be required.

Maximum Service with Extension of Existing System

The maximum elevation within the development appears to be 675 feet. In accordance with TCEQ regulations, the City must maintain a minimum pressure of 35 psi in the system, which equates to a minimum hydraulic grade of 756 at this location. As previously indicated, the City is not quite maintaining this hydraulic

grade at a location in town during normal flow conditions. During a fire hydrant flow test that was equivalent to half the projected demand, the hydraulic grade in town fell well below the minimum required to maintain 35 psi within the proposed development. Due to the projected demands and the elevation of the proposed development, significant improvements to the City's distribution are required before the City can provide service to this development.

Potential Improvement Projects

We have identified several potential projects that could increase the City's ability to serve this development. These projects are listed as potential projects to be considered. We have not completed any modeling to determine the appropriate size of the improvements and whether or not they would allow the City to fully meet the projected demands.

1. Construct a major treated water transmission main paralleling the raw water transmission main. The main would extend approximately 6 miles from the water treatment plant to Highway 123 and C.R. 266.

2. Construct a major treated water transmission main from the water treatment plant to the vicinity Cape Road to the Highway 123. The alignment would generally follow C.R. 266, Old Martindale Road, River Road, and Cape Road.

3. Construct a ground storage and booster pump station near Clovis Barker Road and Highway 123 to boost the pressures to the proposed development. This would require an elevated storage tank within the proposed development. (Based on field tests, this alternative would only be able to supply 1000 gpm to the proposed development before pressures in the system fell to 35 psi.)

4. Reactivate the PRV in Stagecoach to increase available pressures in the southern portion of the distribution system.

5. Increase transmission capabilities from Comanche Tank to the Southern portion of the system.

6. A combination of one or more of the alternatives identified above. These improvements could be phased to match the growth in the projected needs.

Based on our understanding of the peak demands for the proposed development (2,500 gpm fire flow plus 1,300 gpm peak day flow) we would recommend that the extension be at least an 18-inch line. This would result in a peak velocity of 4.9 fps and a headloss of approximately 40 feet from Clovis Barker Road. This line, and

other required transmission improvements may be able to be reduced if elevated storage is provided in conjunction with the proposed development.

If you have any questions concerning this review, please contact me at (512) 452-5905.

Sincerely,

ALAN PLUMMER ASSOCIATES, INC.

Stephen J. Coonan

Stephen J. Coonan, P.E. (Texas No. 65516)
Principal

Memorandum

ALAN PLUMMER ASSOCIATES, INC.
ENVIRONMENTAL ENGINEERS - DESIGNERS - SCIENTISTS

Job No.: 600-0800

To: Mr. Jim Klein, P.E.

From: Curtis Steger, P.E.
Texas P.E. No. 87905

CC: Ms. Laurie Anderson, P.E.
Mr. Steve Coonan, P.E.

Date: 12/26/2002

Re: Temporary System Operation to Repair Comanche Tank

As requested at the last Water Master Plan monthly status meeting, we have developed two temporary water distribution system operation guides for the upper and lower SWTP pressure planes. These guides were created to allow the Comanche Tank to be taken offline for five days during a low demand period (January or February) to allow for leak repairs. The first system operation guide utilizes the Spring Lake wells and booster pumps as the primary source of potable water throughout the entire day. The second system operation guide utilizes a combination of the SWTP high service pump and the Spring Lake booster pumps to supply potable water for the system.

SCENARIO 1

Operation of the upper and lower SWTP pressure planes utilizing the Spring Lake wells, ground storage, and booster pumps to supply potable water would be very similar to the system operation prior to startup of the SWTP and construction of the current Comanche tank. The main difference is that the Comanche booster pumps will not have a ground storage tank to draw from. Prior to the SWTP, the Comanche ground storage tank provided a buffer between the Comanche booster pumps and the Spring lake booster pumps.

By taking the Comanche tank offline, the Comanche booster pumps will draw directly from the SWTP lower pressure plane. Therefore, it is important that enough water be produced in the lower pressure plane to satisfy the demands of the lower plane plus that of the Comanche booster pumps.

An extended period simulation (EPS) model run was performed to evaluate the system performance in this scenario. An attempt to model this scenario by controlling the Spring Lake booster pumps with the discharge header pressure was unsuccessful due to the model's inability to simulate the quickly changing pressure conditions. That is, without an elevated storage tank in the lower SWTP pressure plane, the system pressures change quickly and radically in the model preventing it from converging on an accurate solution. Since the upper and lower SWTP distribution system was previously operated using

discharge header pressure, it is anticipated that the system will still function under that operation. However, we are unable to simulate this operation for an extended period.

To adequately model this scenario, the following controls were simulated. The Spring Lake wells were controlled by the Spring Lake ground storage tank level, Spring Lake booster pumps were controlled by Ranch Road 12 tank level, and Comanche booster pumps were controlled by Ranch Road 12 tank level. The following paragraphs describe the model operation and controls for each of these facilities.

The first Spring Lake well pump is called when water level in the Spring Lake ground storage tank falls below 15.5' and the second well pump is called when the tank water level reaches 15'. The Spring Lake well pumps are turned off when water level in the Spring Lake tank reaches 22'. During the 48 hour simulation, the Spring Lake ground storage tank had 8.46 million gallons pumped into the tank and 8.45 million gallons pumped out of the tank. The starting tank level was 19.3' and the ending tank level was 19.7'.

The first Spring Lake booster pump is controlled by the status of the SWTP high service pump. Since the SWTP high service pump is not called in this scenario, this pump is always on. The second Spring Lake booster pump, pump #4, is called when the Ranch Road 12 tank level falls below 15'. This call coincides with the first Comanche booster pump call and allows for the introduction water into the SWTP lower pressure plane to adequately meet the additional demand of the Comanche booster pump. The third Spring Lake booster pump, pump #2, is called when the Ranch Road 12 tank level falls bellow 14.5'. This call coincides with the second Comanche booster pump call. The fourth Spring Lake booster pump, pump #3, is called when the Ranch Road 12 tank level falls bellow 14.0'. This call coincides with the third Comanche booster pump call. Spring Lake booster pumps 2,3, and 4 are turned off when the Ranch Road 12 tank level reaches 20'. During the 48-hour simulation Spring Lake booster pumps 1, 2, 3, and 4 pumped 4.57 million gallons, 0.29 million gallons, 0.11 million gallons, and 3.48 million gallons respectively.

As previously indicated, the Ranch Road 12 tank level controls the Comanche booster pumps. The first Comanche pump, pump #1, is called when the Ranch Road 12 tank level falls below 15'. The Second Comanche booster pump, pump #4, is called when the Ranch Road 12 tank level falls bellow 14.5'. The third Comanche booster pump, pump #3, is called when the Ranch Road 12 tank level falls bellow 14.0'. The final Comanche booster pump, pump #2, is called when the Ranch Road 12 tank level falls below 13.5. Since the pumping capacity of the four Comanche booster pumps is greater than that of the Spring Lake booster pumps, the call order was arranged to place the smallest burden on the SWTP lower pressure plane. Therefore the largest Comanche booster pump was placed last in the call order. In the model simulation, Comanche booster pump #2 was never called. However, if it had been called, it would have been necessary to call the SWTP high service pump, thus negating the need for the Spring Lake booster pumps. Comanche booster pumps are turned off when the Ranch Road 12 tank level reaches 20'. During the 48-hour simulation Comanche booster pumps 1, 2, 3, and 4 pumped 1.76 million gallons, 0 gallons, 0.24 million gallons, and 0.67 million gallons respectively. The Ranch Road 12 starting tank level was 19' and the ending tank level was 17.4'.

SCENARIO 2

Operation of the upper and lower SWTP pressure planes utilizing the SWTP to supply potable water mirrors the current system operation with a couple of exceptions. Instead of controlling the SWTP high service pump with the Comanche tank level, it is controlled by the Ranch Road 12 tank level. Also, the Comanche booster pumps will not have a storage tank to draw from.

By taking the Comanche tank offline, the Comanche booster pumps will draw directly from the SWTP lower pressure plane. Therefore, it is important that enough water be produced in the lower pressure plane to satisfy the demands of the lower plane plus that of the Comanche booster pumps.

An extended period simulation (EPS) model run was performed to evaluate the system performance in this scenario. To model this scenario, the following controls were simulated. The Spring Lake wells were controlled by the Spring Lake ground storage tank level, Spring Lake booster pumps were controlled by discharge header pressure, SWTP high service pumps were controlled by the Ranch Road 12 tank level, and Comanche booster pumps were controlled by Ranch Road 12 tank level. The following paragraphs describe the model operation and controls for each of these facilities.

The first Spring Lake well pump is called when water level in the Spring Lake ground storage tank falls below 15.5' and the second well pump is called when the tank water level reaches 15'. The Spring Lake well pumps are turned off when water level in the Spring Lake tank reaches 22'. During the 48 hour simulation, the Spring Lake ground storage tank had 2.78 million gallons pumped into the tank and 2.89 million gallons pumped out of the tank. The starting tank level was 19.3' and the ending tank level was 16.4'.

All of the Spring Lake booster pumps are controlled by pressure in the discharge header. The call order for the Spring Lake booster pumps is pump 1, pump 4, pump 2, and pump 3. These pumps are called at pressures of 100 psi, 95 psi, 90 psi, and 85 psi, respectively. During the 48-hour simulation Spring Lake booster pumps 1 and 4 pumped 2.89 million gallons and 47,000 gallons respectively.

The Ranch Road 12 tank level controls both the SWTP high service pump and the Comanche booster pumps. To minimize the pressures that are generated when the SWTP high service pump is called, it is necessary to call at least two Comanche booster pumps. The SWTP high service pump is called when the Ranch Road Tank level falls below 15'. At that time, Comanche booster pumps 2 and 4 are also called to fill the Ranch Road 12 tank. During the 48-hour simulation the SWTP high service pump produces 5.49 million gallons and the Comanche booster pumps 2 and 4 produce 1.52 million gallons and 1 million gallons respectively.

RECOMMENDATION

Based upon evaluation of the two modeling scenarios, it is recommended that Scenario 2 be implemented. Scenario 2 provides the City with more control over the pressure in the lower system. Extremely low pressures should not be encountered since the Spring Lake booster pumps are controlled by system pressure. Extremely high pressures may be possible, however, the high service pump station has a pressure relief valve that should protect the

pumps and the distribution system. Based upon evaluation of historical operations data, it is recommended that the pressure relief valve be set at 135 psi. Additionally, it is recommended that the Comanche tank be valved-off and the system operated for at least one day using Scenario 2 operation guidelines to test whether these guidelines will work in practice.

In addition to the Scenario 2 controls, it is also recommended that the pressure reducing valves at Allen Street, Stagecoach Trail, and Thermon Drive be activated to provide emergency flow to the SWTP lower pressure plane. The Allen Street PRV should be set to 45 psi, the Stagecoach Road PRV should also be set to 45 psi, and the Thermon Drive PRV should be set to 65 psi. These PRV settings will aid the operators of the distribution system to automatically protect the SWTP lower pressure plane from extremely low pressures. If it is determined that the PRV's cannot be activated with these settings, it would be possible to install pressure monitoring equipment at these locations and have a person stationed to manually open the emergency valves. Since the SWTP lower pressure plane will not have any active elevated storage, extremely low pressures could be observed almost immediately in the event of mechanical or power failure at both Spring Lake and the water treatment plant.

Memorandum

ALAN PLUMMER ASSOCIATES, INC.
ENVIRONMENTAL ENGINEERS - DESIGNERS - SCIENTISTS

Job No.: 600-0800

To: Mr. Jim Klein, P.E.
Ms. Laurie Anderson, P.E.

From: Curtis Steger, P.E.
Texas P.E. No. 87905

CC: Mr. Steve Coonan, P.E.

Date: 2/4/03

Re: Cottonwood Creek Water Supply

The City of San Marcos (City) has been approached by a developer that is planning a significant subdivision in the southern portion of the City's water service area. The Cottonwood Creek Development is located along State Highway 123 approximately 4 miles south of IH-35. It encompasses approximately 458 acres with elevations ranging from 600' to 675'. The developer has indicated that a total of 1,903 service unit equivalents are expected. The developer has indicated that the anticipated maximum day flow is 4,591 gallons per minute (gpm), which includes a fire flow of 2,500 gpm.

The City previously requested Alan Plummer Associates, Inc (APAI) to review the service request and evaluate the City's ability to serve the development water. The results of that review indicated that the City's distribution system does not have excess capacity in the area of the proposed development. Significant distribution system improvements would need to be made to meet the projected demands at build-out.

The recommended improvements to meet the projected build-out needs would include the construction of a major transmission main from the Surface Water Treatment Plant to the vicinity of the proposed development. The likely route for this transmission would be along C.R. 266. Due to the length of the proposed transmission main, the need for easements, and need to coordinate the pipeline with the proposed Loop, it would be very difficult for the City to complete the construction of the line to meet the proposed service needs of the development. As a result, the City requested that APAI evaluate several alternatives to provide interim service to the development.

The developer has indicated a desire to begin construction in May 2003. The first structures would be occupied in May 2004. The water demands for the first few years would be limited to approximately 500 homes and a new school campus. The remainder of this memorandum presents alternative interim supply scenarios to bridge the gap until the C.R. 266 transmission main can be completed. In all of the alternatives, it is assumed that an 18-inch line will be constructed along Highway 123 between Clovis Barker and the Cottonwood Creek Subdivision. It is also assumed that the Cottonwood Creek Development elevated storage tank will not be constructed until the C.R. 266 transmission main is completed.

Alternative 1 – Interim Lower McCarty Pressure Plane Feed

This alternative involves the use of the McCarty well and standpipe as the supply for the Cottonwood Creek Development. The Lower McCarty (857') Pressure Plane currently serves 163 connections ranging in elevation from 625' to 735'. In addition, the McCarty well supplies 97 connections in the Upper McCarty Pressure Plane. Supply and storage facilities within the McCarty System include the McCarty well and associated vertical turbine pump, rated at 1300 gpm @ 430' head and the 97' tall McCarty standpipe with 215,000 gallons of elevated storage. The Upper McCarty Pressure Plane is supplied through a packaged booster pump station, with the pumps that are equipped with variable frequency drives to match system output to system demands.

Historical data indicate that the maximum day demand was 2,087,000 gallons on January 4, 2002 and 2,013,000 gallons on July 26, 2001. The average daily production during July and August 2001 was 1.5 million gallons per day (mgd). However, during this period, the McCarty system was connected to the SWTP Lower (826') Pressure Plane through a pressure-reducing valve. At these high production rates, the City experienced some difficulty in maintaining the water level in the McCarty Tank. The pressure-reducing valve was closed in May 2002, which isolated the McCarty system from the remainder of the City's system. The data from May 2002 through August 2002 indicate that the maximum day of production for the McCarty well was 708,000 gallons on May 20, 2002.

Assuming that the McCarty system is capable of sustaining a maximum average demand of 1.5 mgd, there would appear to be approximately 0.8 mgd of capacity available for use in the McCarty system. This excess capacity would support a total of approximately 800 service unit equivalents.

To supply the Cottonwood Creek Development with water from the McCarty system, the position (open versus closed) of several valves would need to be changed. Changing these positions would transform the Clovis Barker 12-inch waterline from the SWTP Lower Pressure Plane to the Lower McCarty Pressure Plane. All service to the Cottonwood Creek Subdivision would be through this 12-inch line until the C.R. 266 line is completed. Having a single 12-inch feed will limit the amount of available fire flow to approximately 1,100 gpm.

While the McCarty system has the capacity to provide this service, the City has noted that the McCarty system requires an emergency interconnect with the SWTP Lower Pressure Plane to meet the Texas Commission on Environmental Quality (TCEQ) requirements. The following Chapter 290 design criteria are applicable for systems with greater than 250 connections.

- Two or more wells having a total capacity of 0.6 gallons per minute per connection must be provided. Where an interconnection is provided with another acceptable water system capable of supplying at least 0.35 gallons per minute for each connection in the combined system under emergency conditions, an additional well will not be required as long as the 0.6 gallons per minute per connection requirement is met for each system on an individual basis.
- A total storage capacity of 200 gallons per connection must be provided.
- Each pump station or pressure plane shall have two or more pumps that have a total capacity of 2.0 gallons per minute per connection or that have a total capacity of at

least 1,000 gallons per minute and the ability to meet peak hourly demands with the largest pump out of service, whichever is less.

- An elevated storage capacity of 100 gallons per connection must be provided.

Based upon these criteria, the McCarty System must have an emergency interconnect to an additional supply source. It has been previously recommended that an emergency interconnect between the McCarty system and the SWTP Lower (826') Pressure Plane would meet the criteria of the rule. However, additional improvements are needed near the intersection of Stagecoach Trail and Snyder Hill Drive, where the Stagecoach PRV is located, to allow for a "back feed" from the SWTP Lower Pressure Plane to supply the McCarty system. It is anticipated that the costs associated with these improvements would be approximately $13,800 as indicated in Table 1.

It is anticipated that these improvements would not be required as part of the ultimate service plan for the Cottonwood Creek Development. Nor would these improvements form the basis for other, City-planned improvement projects.

Alternative 2 – Temporary Ground Storage & Booster Pump Direct Feed to Cottonwood Development

This alternative involves the use of a ground storage tank, which would be filled from the SWTP Lower Pressure Plane, and a booster pump system to supply the Cottonwood Creek Development. The tank and pump station site would be near the intersection of Clovis Barker Road and SH 123. The Cottonwood Creek booster system operation would be similar to the McCarty Upper Pressure Plane, which utilizes three VFD pumps to supply water to the 97 connections in the pressure plane service area.

It is recommended that the ground storage tank be sized to allow for peak demands plus 60 minutes of fire fighting capacity to be pumped to the development while the tank is being filled with the maximum day rate to minimize the impact to the SWTP Lower Pressure Plane. This yields a recommended tank volume of 125,000 gallons.

The booster pumps should be designed for the expected peak hourly demand or the expected maximum day demand plus fire flows. Since the maximum day demand of 350 gpm plus fire flows of 1500 gpm exceeds the peak hourly demand of 595 gpm, the pump station should be capable of supplying 1850 gpm. The static head between the proposed booster pump site (620 feet), and the highest potential elevation to be served in the development (675 feet) is 55 feet. The system should be designed to maintain 20 psi during maximum day plus fire flow demands. The dynamic losses under these two flow conditions in an 18-inch diameter line would be 1.0 feet and 11 feet respectively. For the purposes of this evaluation, the design point is considered to be 1,850 gpm at 112 feet of head.

A cost estimating formula typically used by the City of Austin Utility Systems Planning Division for the Capital Improvements Program (CIP) was used as a basis for determining pump station construction costs. The formula used is:

$C = 27{,}300\ (Q)^{0.75} \times (h)^{0.40}$ Where, C=construction cost in 2/2003 dollars

Q=rated capacity, MGD

h=rated head, ft

TABLE 1
ALTERNATIVE 1 – INTERIM McCARTY LOWER PRESSURE PLANE FEED
COTTONWOOD CREEK TREATED WATER SUPPLY
CITY OF SAN MARCOS

ENGINEER'S OPINION OF PROBABLE CONSTRUCTION COST		APAI JOB NO. 600-0800	SHEET 1 OF 1
CLIENT City of San Marcos		[X] NO DESIGN COMPLETED	
PROJECT Cottonwood Creek Treated Water Supply		[ ] PRELIMINARY DESIGN	
		[ ] FINAL DESIGN	
PROJECT LOCATION S.H. 123		[ ] OTHER	
PREPARED BY CRS	DATE 1/29/2003	REVIEWED BY SJC	DATE 1/29/2003

		QUANTITY		MATERIAL AND LABOR	
ITEM	DESCRIPTION	NO. UNITS	UNIT MEAS.	COST PER UNIT	TOTAL COST
1	Stagecoach PRV Bypass Improvements	1	L.S.	$10,000	$10,000
	Alternative Total Improvements				**$10,000**
	Contingencies (20%)				**$2,000**
	Construction Total				**$12,000**
	Engineering (15% of Construction)				**$1,800**
	Alternative Total Costs				**$13,800**

Exclusive of land costs, it is anticipated that the costs associated with these improvements would be approximately $767,625 as indicated in Table 2. It is anticipated that these improvements would not be required as part of the ultimate service plan for the Cottonwood Creek Development. Nor would these improvements form the basis for other, City-planned improvement projects.

The additional demand exerted on the SWTP Lower Pressure Plane associated with refilling the new ground storage will create some low pressure conditions in the SWTP Lower Pressure Plane. The WaterCad Model of the City's distribution system indicates that the area on Wonder World Drive near the hospital will experience water pressures below 35 psi. Since this would not be compliant with TCEQ regulations, additional distribution system improvements would be required. The extent of these improvements were not defined as part of this analysis since these improvements would likely form the basis for future improvements recommended through the Master Plan process.

Alternative 3 – Permanent Ground Storage & Booster Pump Feed to Lower McCarty Pressure Plane

This alternative involves the use of a ground storage tank, which would be filled from the SWTP Lower Pressure Plane, and a booster pump system to the supply for the Lower McCarty Pressure Plane. The Lower McCarty Pressure Plane would supply the Cottonwood Creek Development. The tank and pump station site would be near the intersection of Stagecoach Trail and Snyder Hill Drive. This McCarty pressure plane feed would allow for the utilization of treated surface water in the Lower and Upper McCarty Pressure Planes as a primary supply, while maintaining the McCarty well for peak demand period supply.

To meet the TCEQ requirements, the booster pumps should have a capacity of 0.35 gpm per connection. There are currently 260 connections in the Upper and Lower McCarty Pressure Planes plus the 500 connections that would be served in the Cottonwood Creek Development. Therefore, a firm pumping capacity of 266 gpm would be required. However, it is recommended that the booster pumps be sized to pump the average daily demand of the McCarty pressure planes plus the Cottonwood Creek Development. Therefore, it is recommended that the pump station have a firm capacity of 375 gpm.

The static head between the proposed tank site and booster pump site, 650', and the normal operating level of the McCarty Standpipe, 857', is 207 feet of static head. The dynamic loss to supply 375 gpm in the 16" diameter line between the pump station and the standpipe would be approximately 2 feet. Therefore the pump station should be sized to provide 375 gpm at 210 feet of head.

It is recommended that the ground storage tank be sized to allow for average day demands for both McCarty Pressure Planes, including intermediate Cottonwood Creek Development demands, to minimize the impact to the SWTP Lower Pressure Plane and reduce the tank size. This yields a recommended tank volume of 35,000 gallons.

Exclusive of land costs, it is anticipated that the costs associated with these improvements would be approximately $307,050 as indicated in Table 3. Improvements associated with

TABLE 2
ALTERNATIVE 2 – TEMPORARY GROUND STORAGE & BOOSTER PUMP- DIRECT FEED TO COTTONWOOD DEVELOPMENT
COTTONWOOD CREEK TREATED WATER SUPPLY
CITY OF SAN MARCOS

ENGINEER'S OPINION OF PROBABLE CONSTRUCTION COST		APAI JOB NO. 600-0800	SHEET 1 OF 1
CLIENT City of San Marcos		[X] NO DESIGN COMPLETED	
PROJECT Cottonwood Creek Treated Water Supply		[ ] PRELIMINARY DESIGN	
		[ ] FINAL DESIGN	
PROJECT LOCATION S.H. 123		[ ] OTHER	
PREPARED BY CRS	DATE 1/29/2003	REVIEWED BY SJC	DATE 1/29/2003

ITEM	DESCRIPTION	QUANTITY NO. UNITS	QUANTITY UNIT MEAS.	MATERIAL AND LABOR COST PER UNIT	MATERIAL AND LABOR TOTAL COST
1	Ground Storage Tank	125,000	Gal.	$1.25	$156,250
2	Booster pump Station (1850 gpm @ 112' Head)	1	EA.	$380,000	$380,000
3	Miscellaneus Yard Piping	1	L.S.	$20,000	$20,000
	Alternative Total Improvements				**$556,250**
	Contingencies (20%)				**$111,250**
	Construction Total				**$667,500**
	Engineering (15% of Construction)				**$100,125**
	Alternative Total Costs				**$767,625**

TABLE 3
ALTERNATIVE 3 – PERMANENT GROUND STORAGE &
BOOSTER PUMP- FEED TO McCARTY LOWER PRESSURE PLANE
COTTONWOOD CREEK TREATED WATER SUPPLY
CITY OF SAN MARCOS

ENGINEER'S OPINION OF PROBABLE CONSTRUCTION COST		APAI JOB NO. 600-0800	SHEET 1 OF 1
CLIENT City of San Marcos		[X] NO DESIGN COMPLETED	
PROJECT Cottonwood Creek Treated Water Supply		[ ] PRELIMINARY DESIGN	
		[ ] FINAL DESIGN	
PROJECT LOCATION S.H. 123		[ ] OTHER	
PREPARED BY CRS	DATE 1/29/2003	REVIEWED BY SJC	DATE 1/29/2003

		QUANTITY		MATERIAL AND LABOR	
ITEM	DESCRIPTION	NO. UNITS	UNIT MEAS.	COST PER UNIT	TOTAL COST
1	Ground Storage Tank	35,000	Gal.	$1.50	$52,500
2	Booster pump Station (375 gpm @ 210' Head)	1	EA.	$150,000	$150,000
3	Miscellaneus Yard Piping	1	L.S.	$20,000	$20,000
	Alternative Total Improvements				**$222,500**
	Contingencies (20%)				**$44,500**
	Construction Total				**$267,000**
	Engineering (15% of Construction)				**$40,050**
	Alternative Total Costs				**$307,050**

this alternative could fulfill the City's long-range operations plan to provide surface water to the McCarty pressure planes.

The additional demand exerted on the SWTP Lower Pressure Plane associated with refilling the new ground storage will create some low pressure conditions in the SWTP Lower Pressure Plane. The WaterCad Model of the City's distribution system indicates that the area on Wonder World Drive near the hospital will experience water pressures below 35 psi. Since this would not be compliant with TCEQ regulations, additional distribution system improvements would be required. The extent of these improvements were not defined as part of this analysis since these improvements would likely form the basis for future improvements recommended through the Master Plan process.

Alternative 4 – Pipeline to Supply McCarty Pressure Plane from SWTP Upper Pressure Plane

This alternative involves the construction of a pipeline between the SWTP Upper Pressure Plane and the Lower McCarty Pressure Plane. The Lower McCarty Pressure Plane would supply the Cottonwood Creek Development. The pipeline would generally follow an existing caliche driveway that begins at Clyde Street and winds though ranch property crossing Purgatory Creek and eventually connecting to Summit Ridge. This McCarty pressure plane feed would allow for the utilization of treated surface water in the Lower and Upper McCarty Pressure Planes as a primary supply, while maintaining the McCarty well for peak demand period supply.

The connection of the SWTP Upper Pressure Plane and the Lower McCarty Pressure Plane would also allow connections between Franklin Street and Marlton Street south of Columbia Avenue to be transferred to the Lower McCarty Pressure Plane (857'). These connections are at elevations generally too low for the SWTP Upper Pressure Plane (936') and therefore experience high pressures. The previous plan was to transfer these services to the SWTP Lower Pressure Plane, however, there was concern that the 45 to 50 psi pressures would be unacceptable to the residents. Transferring these services to the Lower McCarty Pressure Plane would result in pressures between 60 and 65 psi.

Exclusive of land costs, it is anticipated that the costs associated with these improvements would be approximately $1,097,100 as indicated in Table 4. Improvements associated with this alternative could fulfill the City's long-range operations plan to provide surface water to the McCarty pressure planes.

Alternative 5 – Pipeline to Supply San Marcos Outlet Mall from SWTP Lower Pressure Plane

This alternative involves the construction of a parallel pipeline along the IH-35 frontage road to allow the San Marcos Outlet Mall to obtain service from the SWTP Lower Pressure Plane while the Cottonwood Creek Development receives service from the Lower McCarty Pressure Plane. The pipeline would be constructed from the 12" Clovis Barker waterline approximately 700 feet east of IH-35 to the bore under IH-35. A pressure-reducing valve between the Lower McCarty Pressure Plane and the 12" waterline that will serve the outlet mall is recommended to provide emergency fire flows.

TABLE 4
ALTERNATIVE 4 – PIPELINE TO SUPPLY McCARTY PRESSURE PLANE FROM THE SWTP UPPER PRESSURE PLANE
COTTONWOOD CREEK TREATED WATER SUPPLY
CITY OF SAN MARCOS

ENGINEER'S OPINION OF PROBABLE CONSTRUCTION COST		APAI JOB NO. 600-0800	SHEET 1 OF 1
CLIENT City of San Marcos		[X] NO DESIGN COMPLETED	
PROJECT Cottonwood Creek Treated Water Supply		[ ] PRELIMINARY DESIGN	
		[ ] FINAL DESIGN	
PROJECT LOCATION S.H. 123		[ ] OTHER	
PREPARED BY CRS	DATE 1/29/2003	REVIEWED BY SJC	DATE 1/29/2003

		QUANTITY		MATERIAL AND LABOR	
ITEM	DESCRIPTION	NO. UNITS	UNIT MEAS.	COST PER UNIT	TOTAL COST
1	16" PVC/DIP Transmission Pipeline	9,000	L.F.	$85.00	$765,000
2	Pressure Reducing Valve/Vault	1	EA.	$20,000	$20,000
3	Wet Connections	2	EA.	$5,000	$10,000
	Alternative Total Improvements				**$795,000**
	Contingencies (20%)				**$159,000**
	Construction Total				**$954,000**
	Engineering (15% of Construction)				**$143,100**
	Alternative Total Costs				**$1,097,100**

Exclusive of land costs, it is anticipated that the costs associated with these improvements would be approximately $262,200 as indicated in Table 5. It is anticipated that these improvements would not be required as part of the ultimate service plan for the Cottonwood Creek Development. Nor would these improvements form the basis for other, City-planned improvement projects.

Recommendation

A total of five alternatives were evaluated to provide interim water service to the proposed Cottonwood Creek Subdivision. The locations of the alternatives are illustrated on Figure 1. These alternatives are intended to allow the City to provide service beginning in early 2004 for a period of two years. After that period, it is assumed that the major transmission main will be completed.

The following table contains a summary of the advantages and disadvantages for each of the alternatives.

Alt.	Description	Advantages	Disadvantages
1	Service from McCarty system	• Least cost alternative • Can be completed quickly • Minimizes lost costs	• Potential to tax McCarty system
2	Booster pump system from SWTP Lower		• All costs are lost costs • Requires maintenance of another P.S. and tank • Relatively expensive • Requires undefined distribution improvements
3	Service from McCarty system supplemented with a booster pump system to McCarty, from the SWTP Lower	• Improvements can be used in future system	• Requires maintenance of another P.S. and tank • Relatively expensive • Requires undefined distribution improvements
4	Service from McCarty system supplemented with a pipeline connecting SWTP Upper to McCarty Lower	• Improvements can be used in future system • Resolves high pressure problems in Westover Hills	• Most expensive alternative • May be difficult to complete timely due to environmental constraints • Energy inefficient
5	Service from McCarty with a pipeline to transfer Outlet Mall service from McCarty to SWTP Lower	• Moderate costs • Can be completed timely	• All costs are lost costs

TABLE 5
ALTERNATIVE 5 – PARALLEL PIPELINE BETWEEN CLOVIS BARKER AND IH-35 BORE
COTTONWOOD CREEK TREATED WATER SUPPLY
CITY OF SAN MARCOS

ENGINEER'S OPINION OF PROBABLE CONSTRUCTION COST		APAI JOB NO. 600-0800	SHEET 1 OF 1
CLIENT City of San Marcos		[X] NO DESIGN COMPLETED	
PROJECT Cottonwood Creek Treated Water Supply		[ ] PRELIMINARY DESIGN	
		[ ] FINAL DESIGN	
PROJECT LOCATION S.H. 123		[ ] OTHER	
PREPARED BY CRS	DATE 1/29/2003	REVIEWED BY SJC	DATE 1/29/2003

		QUANTITY		MATERIAL AND LABOR	
ITEM	DESCRIPTION	NO. UNITS	UNIT MEAS.	COST PER UNIT	TOTAL COST
1	12" PVC/DIP Transmission Pipeline	2,000	L.F.	$80.00	$160,000
2	Pressure Reducing Valve/Vault	1	EA.	$20,000	$20,000
3	Wet Connections	2	EA.	$5,000	$10,000
	Alternative Total Improvements				**$190,000**
	Contingencies (20%)				**$38,000**
	Construction Total				**$228,000**
	Engineering (15% of Construction)				**$34,200**
	Alternative Total Costs				**$262,200**

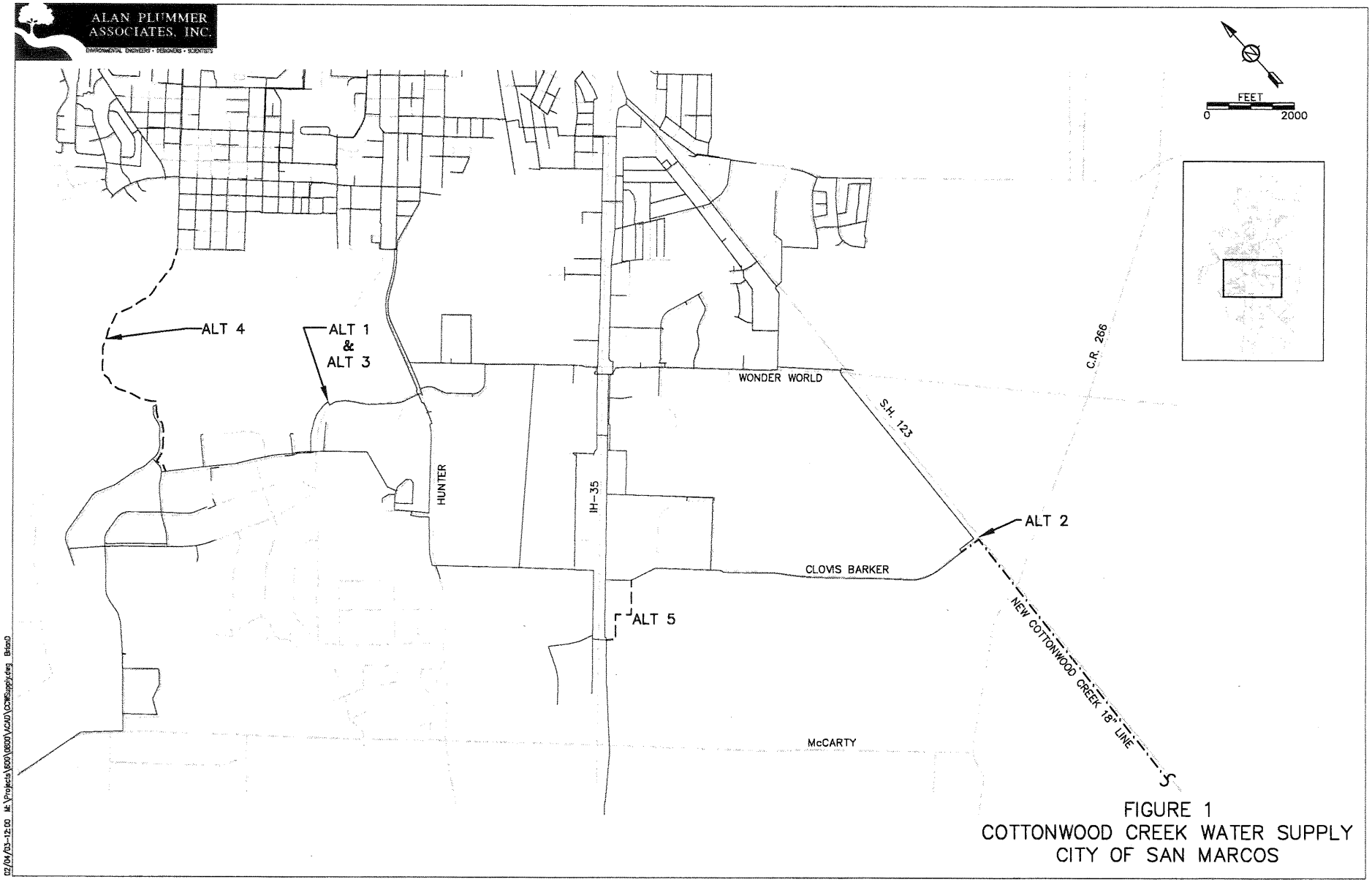

FIGURE 1
COTTONWOOD CREEK WATER SUPPLY
CITY OF SAN MARCOS

02/04/03-12:00 M:\Projects\600\0600\ACAD\CCWSupply.dwg BrianD

Based on this summary, Alternative 1 appears to be the least costly. Past experience with the McCarty well indicates that the system should be capable of meeting the demand. The emergency connection to the lower system is not optimal, but should provide adequate service for the limited period. If there is continued concern over the ability of McCarty to meet the increased demands, Alternative 5 provides a good alternative to minimize the increased demands on the McCarty system.

Memorandum

ALAN PLUMMER ASSOCIATES, INC.
ENVIRONMENTAL ENGINEERS - DESIGNERS - SCIENTISTS

Job No.: 600-0800

To: Ms. Laurie Anderson, P.E.
Mr. Jim Klein, P.E.

From: Curtis Steger, P.E.
Texas P.E. No. 87905

CC: Stephen J. Coonan, P.E.

Date: 2/17/03

Re: Population Projections

We have received the final 2027 population projections with comments from Jon James. We are now proceeding with the modeling of improvements and I wanted to relay some information to you.

Based upon the 2000 TSZ population data for Hays County and the City's current Water service area, the approximate population served in 2000 was 35,368. This population includes the SWTSU population but does not include the dually certified Crystal Clear Service Area nor does it include any population outside of Hays County. The approximate population served in 2001 was 37,946 based upon an interpolation of this same information. However, SWTSU only needed water for approximately one month, therefore deleting SWTSU would result in a population served of approximately 33,668. The average daily demand in 2001 was 5.485 MGD, yielding a daily per capita consumption of 162.9 gallons. This per capita consumption includes all unaccounted water, commercial, industrial, and various maintenance uses.

The TSZ's where the City's Planning and Zoning Department has received development applications are generally shown by CAMP to be growing at a faster rate than the average growth rate for the City as a whole. However, there are several TSZ's where the CAMPO projections show that the growth is not sufficient to reach the developers expected build-out populations by 2027. Table 1 summarizes the development applications and representative TSZ information.

Development	Residential SUEs	Equivalent SUE Population	TSZ ID	2000-2027 TSZ Pop. Total Growth	2000-2027 Service Pop.Growth
Shelacy	6,600	15,246	781 790	861 798	535 798
Cottonwood Creek	2,886	6,670	778 779	2,363 2,549	2,244 2,160
Galisteo Ranch Subdivision	2,577	5,950	789	4,456	4,456
Smith Tract	2,088	4,825	772 773	1,672 1,380	1,672 1,380
3x100 ac Posey Road Tracts	1,800	4,158	781	861	535
Bennet Realty Tract	1,300	3,000	823	1,527	700
Camino Real	1,264	2,920	775	2,186	2,186
McKinley Place Sec 2&3	587	1,350	802	3,753	3,753
Holt Property	520	1,200	835	1,428	1,357
Hunter's Hollow	358	825	741	2,510	2,510
Cottonwood Crossing	269	620	802	3,753	3,753
Hunter's Hill	250	575	787	631	631
Berry Tract	190	440	762	1,441	1,441
Park Hill	183	420	776	658	658
Vellagio	155	360	724	959	959
Melrose	135	310	724	959	959
Bishop's Crossing Sec 2	92	210	737	846	846
Willow Creek Sec 11&12	89	205	670 738	622 823	622 516
Greenpoint	16	35	683	0	0
Lyendecker	Commercial				
Widelights	Commercial				
Nash Subdivision	Commercial				
Perry Financial Tract	Outside of Water Service Area				
Highway 123 Business Park	Commercial				

We will proceed with CIP project development recommendations based upon the CAMPO growth/distribution data for 2027, even though these numbers are less than the developer's projections in some cases.

Memorandum

ALAN PLUMMER ASSOCIATES, INC.
ENVIRONMENTAL ENGINEERS - DESIGNERS - SCIENTISTS

Job No.: 600-0800

To: Ms. Laurie Anderson, P.E.

From: Curtis Steger, P.E.
Texas P.E. No. 87905

CC: Mr. Jim Klein, P.E.
Mr. Stephen J. Coonan, P.E.

Date: 4/24/03

Re: South Industrial Park Service

Per our telephone conversation on April 23, 2003, I have evaluated the City's ability to provide service to the proposed South Industrial Park along the western frontage of IH 35 near the southern boundary of the City's CCN. A total of 3 alternative service scenarios were modeled to provide the requested 50,000 gpd average demand (35 gpm), 350 gpm peak demand, and the highest available fire flow while maintaining a minimum of 20 psi residual system pressure.

The first alternative that was evaluated was to serve the industrial park from the Oak Ridge Lower Pressure Plane via an 8" waterline from the 6" waterline along Posey Road. This evaluation indicated that the most flow available to the industrial site without adversely affecting the remainder of the pressures in the system, that is maintaining at least 35 psi during the peak hour, was 100 gpm. The fire flow analysis indicated that 250 gpm was available while maintaining 20 psi residual system pressure. The lengthy 6" waterlines and the lack of any system looping severely reduce the Oak Ridge systems ability to provide adequate service to the industrial park.

The second alternative that was evaluated was to serve the industrial park from the McCarty Lower Pressure Plane via an 8" waterline from the southernmost portion of the McCarty system. This alternative includes a 12" bore under IH 35 to connect to the existing 12" waterline along the northbound frontage road to the existing 6" waterline along the southbound frontage road. The evaluation indicated that the requested 350 gpm peak demand was available without adversely affecting the remainder of the pressures in the system. The fire flow analysis indicated that 1000 gpm was available while maintaining 20 psi residual system pressure. The lengthy 8" waterline from the McCarty system to the proposed industrial park appears to be the limiting factor in providing additional fire flow.

The third and final alternative that was evaluated was to serve the industrial park from the McCarty Lower Pressure Plane via a 12" waterline from the southernmost portion of the McCarty system. This alternative includes a 12" bore under IH 35 to connect to the existing 12" waterline along the northbound frontage road to the existing 6" waterline along the southbound frontage road. The evaluation indicated that the requested 350 gpm peak demand was available without adversely affecting the remainder of the pressures in the system. The fire flow analysis indicated that 1350 gpm was available while maintaining 20

psi residual system pressure. The 12" waterline that serves the Outlet Mall along Centerpoint Road and the lack of system looping appear to be the limiting factors in providing additional fire flow.

There are two improvements that could be constructed to provide additional fire flow for Alternatives 2 and 3. The first improvement is the installation of a combination pressure sustaining valve (PSV)/pressure reducing valve (PRV) from the Oak Ridge system to the new 12" waterline. This PSV/PRV would be set such that it only opens when there is a fire flow demand or other emergency on the McCarty System while maintaining adequate emergency pressures in the Oak Ridge System. With this additional improvement, 1,500 gpm fire flow can be provided. The second improvement is the installation of a booster pump station at the Soyars well and tank site to feed the McCarty Lower Pressure Plane. This improvement will increase the available fire flow to more than 1,500 gpm in addition to providing a redundant source to the McCarty well.

Memorandum

ALAN PLUMMER ASSOCIATES, INC.
ENVIRONMENTAL ENGINEERS - DESIGNERS - SCIENTISTS

Job No.: 600-0800

To: Ms. Laurie Anderson, P.E.

From: Curtis Steger, P.E.
Texas P.E. No. 87905

CC: Mr. Jim Klein, P.E.
Mr. Stephen J. Coonan, P.E.

Date: 4/29/03

Re: Bennett/Dam Blanco Development Service

Per our telephone conversation on April 23, 2003, I have evaluated the City's ability to provide service to the proposed Bennett and Dam Blanco developments that lie west of Post Road near the northern boundary of the City's CCN. The two developers are estimating approximately 2,200 combined service unit equivalents (SUE) in the developments. Based upon previous correspondence between APAI and the City, it was assumed that a peak day flow of 0.7 gpm per service unit would be needed. Therefore a total of approximately 1540 gpm will be needed for these two developments.

The CAMPO population projections, the basis for previous planning recommendations, limited the growth within the traffic serial zone (TSZ) that both of these developments lie within to 700 people between 2002 and 2027. Based upon historic City population density data, the average residential SUE has 2.3 people, therefore, the CAMPO projections limited growth in this are to approximately 300 SUEs. Given the increased population projections within the study period, the 2027 model was re-evaluated to incorporate the increased demands assuming that these developments build out within the study period.

The first alternative evaluated was to serve the two developments from the SWTP Lower Pressure Plane via an extension of the 16" waterline that currently provides service to the Champions Crossing development. Using the 2007 model to evaluate this alternative, results indicated that the most flow available to the two developments without adversely affecting the remainder of the pressures in the system, that is maintaining at least 35 psi during the peak hour, was 350 gpm. This flow would serve approximately 500 SUEs. The fire flow analysis indicated that approximately 1000 gpm was available while maintaining 20 psi residual system pressure.

The second alternative evaluated was the impact that the extension of the 16" waterline along Post Road to the proposed Bennett and Dam Blanco developments and the construction of an elevated storage tank along Post Road had on the system's ability to provided service to the two developments. During the maximum day demand simulation evaluated in alternative one, the hydraulic grade near the two developments is well below the acceptable hydraulic gradients for elevated storage. Therefore, the system would not be able to maintain water in an elevated tank and increases in available water would not be achieved.

The third alternative evaluated was to serve the two developments by closing the loop along Post Road between Champions Crossing and Briar Meadow Road. Based upon the original population projections, it was recommended that the loop be closed with a 16" waterline. This sizing allowed a proposed elevated storage tank along Post Road to operate at appropriate levels during the 2027 maximum day simulation. However, when the additional demand is simulated in this area, the 16" loop is not adequate to provide service and allow the elevated storage tank to operate at appropriate levels during the 2027 maximum day simulation. It is necessary to increase the pipe diameter to 24" to achieve appropriate tank operation while serving the increased demand. This alternative provides adequate flow and pressure to serve the entire build-out for the two proposed developments both with and without elevated storage.

If the City participates in the waterline project that GBRA is currently in the process of designing, additional flow can be delivered to the two developments. For alternative one, an additional 500 gpm (700 SUEs) is available if the City's portion of the waterline is equivalent to a 12" waterline. If the City's portion of the waterline is equivalent to a 16" waterline, the increase flow available in alternative one is 850 gpm (1,200 SUEs).

Memorandum

ALAN PLUMMER ASSOCIATES, INC.
ENVIRONMENTAL ENGINEERS - DESIGNERS - SCIENTISTS

Job No.: 600-0800

To: Ms. Laurie Anderson, P.E.

From: Curtis Steger, P.E.
Texas P.E. No. 87905

CC: Mr. Jim Klein, P.E.
Mr. Stephen J. Coonan, P.E.

Date: 5/20/03

Re: Bennett/Dam Blanco 16" Post Road W.L. Excess Capacity

Per our telephone conversation on May 15, 2003, I have evaluated the excess capacity in the proposed 16" waterline along Post Road to provide full service to the Bennett and Dam Blanco developments. The proposed Bennett and Dam Blanco developments lie west of Post Road near the northern boundary of the City's CCN and are estimated to construct approximately 2,200 combined service unit equivalents (SUE). Based upon previous correspondence between APAI and the City, it was assumed that a peak day flow of 0.7 gpm per service unit would be needed. Therefore a total of approximately 1540 gpm will be needed for these two developments.

Based upon evaluation of the 2007 modeled improvements, it is estimated that the excess capacity in the waterline is approximately 200 gpm during maximum day conditions while maintaining a 35 psi residual system pressure during the peak hour. In addition, a fire demand of 1000 gpm at the development site indicates that the 16" waterline has ample capacity to deliver the flow.

Based upon evaluation of the 2017 modeled improvements, that include the 16" Post waterline plus the City's 12" equivalent share of the GBRA waterline, it is estimated that the excess capacity in the 16" waterline is approximately 450 gpm during maximum day conditions while maintaining at 35 psi residual system pressure during the peak hour.

Memorandum

ALAN PLUMMER ASSOCIATES, INC.
ENVIRONMENTAL ENGINEERS - DESIGNERS - SCIENTISTS

Job No.: 600-0800

To: Mr. Jim Klein, P.E.

From: Curtis Steger, P.E.
Texas P.E. No. 87905

CC: Ms. Laurie Anderson, P.E.
Mr. Stephen J. Coonan, P.E.

Date: 5/21/03

Re: Shelacy Development Service

Per our telephone conversation on May 19, 2003, I have evaluated the City's ability to provide service to the proposed Shelacy development that lies west of Old Bastrop Highway, East of Centerpoint Road, and generally south of Posey Road near the southeastern boundary of the City's CCN. The developer is estimating that the first phase of the development, consisting of approximately 300 service unit equivalents (SUE), will be constructed within the next year. Previous information provided by the City indicates there will be 6,600 SUEs upon completion of the development. Based upon previous correspondence between APAI and the City, it was assumed that a peak day flow of 0.7 gpm per service unit would be needed. Therefore a total of approximately 210 gpm will be needed for the first phase of the development and 4,620 gpm will be needed for the ultimate development.

The CAMPO population projections, the basis for previous planning recommendations, limited the growth within the traffic serial zones (TSZ) that the Shelacy development lies within to 1,300 people between 2002 and 2027. Based upon historic City population density data, the average residential SUE has 2.3 people, therefore, the CAMPO projections limited growth in this are to approximately 570 SUEs. Due to the large difference in CAMPO planned versus Developer planned SUE counts, additional coordination is suggested prior to evaluating the effects of the complete build out upon the water treatment and distribution system facilities.

The developer has indicated that they wish to construct a 12" waterline from the existing 12" waterline at Posey and IH-35, along Posey Road, to the development. The first analysis was based upon evaluation of the current 2002 model with modifications to reflect the current operation of the distribution system south of Centerpoint Road and East of IH-35 as being part of the McCarty Pressure plane. These operational changes were initiated during April 2003.

The current model indicates that the minimum pressure at the highpoint of the South Ridge Estates during the maximum day demand is approximately 40 psi. With the addition of the previously described 12" waterline to serve the Shelacy Development, the system is capable of delivering 120 gpm to the development without adversely affecting the remainder of the pressures in the system, that is maintaining at least 35 psi during the peak hour. This flow

would serve approximately 170 SUEs. The fire flow analysis indicated that an additional demand of 300 gpm was available to the development without allowing the residual system pressure to drop below 20 psi. This is due to the high elevation of the services within the South Ridge Estates and the 24,000 linear feet of 12" supply waterline that is not looped.

The second analysis of the Shelacy Development supply was based upon the currently proposed 2007 system model. This model currently plans to serve the southeast portion of the distribution system, the area that the proposed Shelacy Development is situated, from the Oak Ridge ground storage tank, which is ultimately supplied with treated surface water via the McCarty and SWTP planes. This analysis indicated that construction of a 12" waterline from Hunter Road along Posey Road crossing IH-35 was necessary in addition to the previously described 12" waterline that ultimately serves the Shelacy Development. With the addition of this waterline, the system is capable of delivering more than the required Phase capacity of 210 gpm without adversely affecting the remainder of the pressures in the system. The fire flow analysis indicated that an additional demand of 600 gpm was available to the development without allowing the residual system pressure to drop below 20 psi.

Memorandum

ALAN PLUMMER ASSOCIATES, INC.
ENVIRONMENTAL ENGINEERS - DESIGNERS - SCIENTISTS

Job No.: 600-0800

To: Ms. Laurie Anderson, P.E.

From: Curtis Steger, P.E.
Texas P.E. No. 87905

CC: Mr. Jim Klein, P.E.
Mr. Stephen J. Coonan, P.E.

Date: 6/3/03

Re: La Hacienda Development Service-Update

Per our telephone conversation on May 30, 2003, I have evaluated six alternatives regarding the City's ability to provide service to the proposed La Hacienda development that lies west of Old Bastrop Highway, East of Centerpoint Road, and generally south of Posey Road near the southeastern boundary of the City's CCN. The developer is planning to construct 200-300 service unit equivalents (SUE) per year until the complete build-out of the development of 1,800 units is complete. Based upon previous correspondence between APAI and the City, it was assumed that a peak day flow of 0.7 gpm per service unit would be needed. Therefore a total of approximately 210 gpm will be needed for the first year of the development and 1,260 gpm will be needed for the ultimate development.

The CAMPO population projections, the basis for previous planning recommendations, limited the growth within the traffic serial zones (TSZ) that the La Hacienda development lies within to 1,300 people between 2002 and 2027. Based upon historic City population density data, the average residential SUE has 2.3 people, therefore, the CAMPO projections limited growth in this area to approximately 570 SUEs. Due to the large difference in CAMPO projected versus Developer planned SUE counts, additional coordination is suggested prior to evaluating the effects of the complete build out upon the water treatment and distribution system facilities.

A previous memorandum, dated May 21, 2003, evaluated this development being served via a 12" waterline along Posey Road. This memorandum indicated that service was limited to 120 gpm (~170 SUEs) without adversely affecting the remainder of the pressures in the system, that is maintaining at least 35 psi during the peak hour. The limiting location throughout the evaluation was the highpoint of the South Ridge Estates. This memorandum provides six alternative evaluations regarding the City's ability to provide service to the development.

Alternative 1

The developer indicates that they are willing to construct a 16-inch (in.) pipeline from the existing 12-in. waterline at Old Bastrop Road and SH 123, south along Old Bastrop Road, to the development. This alignment follows the proposed El Camino Real alignment, however, the pipeline diameter is smaller. This alternative analysis is based upon evaluation of the

current 2002 model with modifications to reflect the current operation of the distribution system south of Centerpoint Road and East of IH-35 as being part of the McCarty Pressure plane. These operational changes were initiated during April 2003.

With the addition of the previously described 16-in. waterline, the system is capable of delivering 120 gpm to the development without adversely affecting the remainder of the system pressures. The fire flow analysis indicated that an additional demand of 750 gpm was available to the development without allowing the residual system pressure to drop below 20 psi.

Alternative 2

The second alternative analysis to supply the development incorporated a booster pump station at the existing Soyars standpipe plus the pipeline improvements identified in Alternative 1. This pump station would boost into the McCarty Lower Pressure Plane during peak demand periods to increase system pressure. The maximum day (MD) demand extended period simulation (EPS) model run indicated that the system is capable of delivering 350 gpm (500 SUEs) to the development without adversely affecting the remainder of the system pressures. The fire flow analysis indicated that an additional demand of 800 gpm was available to the development without allowing the residual system pressure to drop below 20 psi.

Alternative 3

The third alternative is the upsizing of the 16-in. pipeline evaluated in Alternative 1 to the diameters identified in the June 2003 Draft Water Master Plan Report. These diameters range from 12-in. to 24-in. The MD EPS model run indicated that the system is capable of delivering 150 gpm (~210 SUEs) to the development without adversely affecting the remainder of the system pressures. The fire flow analysis indicated that approximately the same results as Alternative 1.

Alternative 4

The fourth alternative analysis to supply the development incorporated a booster pump station at the existing Soyars standpipe with the increased size of the El Camino Real Pipeliene. The MD EPS model run indicated that the system is capable of delivering approximately 400 gpm (~570 SUEs) to the development without adversely affecting the remainder of the system pressures. The fire flow analysis indicated similar results to Alternative 2.

Alternative 5

The fifth alternative evaluated the removal of the South Ridge Estates and Eagle Point from the City's distribution system. This scenario included Alternative 1 improvements and is capable of delivering approximately 400 gpm (~570 SUEs) to the development without adversely affecting the remainder of the system pressures. The fire flow analysis indicated that an additional demand of approximately 850 gpm was available to the development without allowing the residual system pressure to drop below 20 psi.

Alternative 6

The sixth alternative evaluated the removal of the South Ridge Estates and Eagle Point from the City's distribution system. This scenario included Alternative 2 improvements and is capable of delivering approximately 700 gpm (1000 SUEs) to the development without adversely affecting the remainder of the system pressures. The fire flow analysis indicated that an additional demand of approximately 1,000 gpm was available to the development without allowing the residual system pressure to drop below 20 psi.

Based upon an average development rate of 250 SUEs per year, these improvements would provide service through 2007, at which time the remainder of the El Camino Real pipeline is schedule to be completed. Running the 2007 model with the completed El Camino Real improvements would result in an available capacity in excess of the 1,260 gpm need for complete build-out of 1,800 SUEs and a fire flow in excess of 1700 gpm.

Memorandum

ALAN PLUMMER ASSOCIATES, INC.
ENVIRONMENTAL ENGINEERS - DESIGNERS - SCIENTISTS

Job No.: 600-0800

To: Ms. Laurie Anderson, P.E.

From: Curtis Steger, P.E.
Texas P.E. No. 87905

CC: Mr. Jim Klein, P.E.
Mr. Stephen J. Coonan, P.E.

Date: 07/03/03

Re: Crystal Clear Fire Protection

The City of San Marcos has requested that APAI evaluate the necessary improvements to provide fire protection for the portion of the Crystal Clear WSC service area that lies within the recently annexed portion of the City of San Marcos. As part of the fire flow evaluation process, the City of San Marcos Fire Department recently conducted field fire flow testing for this area and determined that all existing fire hydrants, except for one, were capable of producing 750 gpm while maintaining 20 psi residual system pressure. The single fire hydrant that was not capable of producing 750 gpm was able to produce 720 gpm.

Per our telephone conversation on July 3, 2003, I have analyzed two options to provide fire protection for the portion of the Crystal Clear WSC service area that does not currently have fire hydrants. Streets within this area include: Laurel Hill Road, Suttles Avenue, James Street, Dees Street, portions of Philo Street, and portions of Reimer Avenue.

Option 1

Option 1 consists of installation of fire hydrants, hydrant leads, valves, wet connections, and all necessary road repair at the seven locations shown on Figure 1. This option assumes the distribution infrastructure is capable of conveying the design flow of 750 gpm. Hydrants in this alternative are spaced such that no residence is more than 500 linear feet from a hydrant, per the City's design criteria. The opinion of probable construction cost for this option is $58,000 and is shown on Table 1.

Option 2

Option 2 consists of installation of approximately 5,850 linear feet of 8-inch fire line plus the seven Option 1 hydrant improvements as shown on Figure 2. This option will connect to the existing 8-inch fire line that provides fire protection service to the San Marcos Independent School District (Miller Junior High School), loop through the project area, and connect to the 16-inch waterline along Hunter Road. The opinion of probable construction cost for this option is $340,000 and is shown on Table 2.

Figure 1
Crystal Clear Fire Protection
Option 1

Table 1
City of San Marcos
Crystal Clear Fire Protection - Option 1

ENGINEER'S OPINION OF PROBABLE CONSTRUCTION COST		APAI JOB NO. 600-0800	
CLIENT City of San Marcos		[X] NO DESIGN COMPLETED	
PROJECT Crystal Clear WSC Fire Protection		[ ] PRELIMINARY DESIGN	
		[ ] FINAL DESIGN	
PROJECT LOCATION City of San Marcos		[ ] OTHER	
PREPARED BY CRS	DATE 7/3/2003	REVIEWED BY CWS	DATE 7/3/2003

		QUANTITY		MATERIAL AND LABOR	
ITEM	DESCRIPTION	NO. UNITS	UNIT MEAS.	COST PER UNIT	TOTAL COST
1	Fire Hydrant Installation (Including fire hydrants,	7	EA.	$6,000	$42,000
	hydrant leads, valves, wet connections,				
	and all necessary road repair)				
	Contingencies (20%)				$8,000.00
	Engineering (15%)				$8,000.00
	Construction Total				**$58,000**

Table 2
City of San Marcos
Crystal Clear Fire Protection - Option 2

ENGINEER'S OPINION OF PROBABLE CONSTRUCTION COST		APAI JOB NO. 600-0800	
CLIENT City of San Marcos		[X] NO DESIGN COMPLETED	
PROJECT Crystal Clear WSC Fire Protection		[ ] PRELIMINARY DESIGN	
		[ ] FINAL DESIGN	
PROJECT LOCATION City of San Marcos		[ ] OTHER	
PREPARED BY CRS	DATE 7/3/2003	REVIEWED BY CWS	DATE 7/3/2003

		QUANTITY		MATERIAL AND LABOR	
ITEM	DESCRIPTION	NO. UNITS	UNIT MEAS.	COST PER UNIT	TOTAL COST
1	8" C900 Fire Protection Line	5,850	L.F.	$35	$205,000
2	Fire Hydrant Installation (Including fire hydrants,	7	EA.	$6,000	$42,000
	hydrant leads, valves, wet connections,				
	and all necessary road repair)				
	Contingencies (20%)				$49,000.00
	Engineering (15%)				$44,000.00
	Construction Total				**$340,000**

APPENDIX E

CAPITAL IMPROVEMENTS PROGRAM PROJECT INPUT FORMS

City of San Marcos
Fiscal Years 2003-2012
Capital Improvements Program Project Input Form

Project Name:	Highway 123 12" Line					Project Category:		Water				
Department:	Engineering/ W & WW Utilities					Project Manager:		Engineering				
Project Costs:	Prior Funding	Yr. 03/04	Yr. 04/05	Yr. 05/06	Yr. 06/07	Yr. 07/08	Yr. 08/09	Yr. 09/10	Yr. 10/11	Yr. 11/12	Yr. 12/13	Total
Design/Studies		41,000	-	-	-	-	-	-	-	-	-	41,000
Land/R.O.W.	-	-	-	-	-	-	-	-	-	-	-	-
Construction		453,000					-					453,000
Equipment	-	-	-	-	-	-	-	-	-	-	-	-
Other Costs	-	-	-	-	-	-	-	-	-	-	-	-
Contingency Funds	-	16,000	-	-	-	-	-	-	-	-	-	16,000
Total	**$0**	**$510,000**	**$0**	**$0**	**$0**	**$0**	**$0**	**$0**	**$0**	**$0**	**$0**	**$510,000**
Funding Sources:	Prior Funding	Yr. 03/04	Yr. 04/05	Yr. 05/06	Yr. 06/07	Yr. 07/08	Yr. 08/09	Yr. 09/10	Yr. 10/11	Yr. 11/12	Yr. 12/13	Total
Operating Transfer	-	-	-	-	-	-	-	-	-	-	-	-
(Grants)	-	-	-	-	-	-	-	-	-	-	-	-
Revenue Bonds		-	-	-	-	-	-	-	-	-	-	-
Cert. of Obligation	-	-	-	-	-	-	-	-	-	-	-	-
G. O. Bonds	-	-	-	-	-	-	-	-	-	-	-	-
Impact Fees	-	-			-	-	-	-	-	-	-	-
Total	**$0**	**$0**	**$0**	**$0**	**$0**	**$0**	**$0**	**$0**	**$0**	**$0**	**$0**	**$0**

Description and Purpose

Construct 12" water main between Wonder World Drive and Clovis Barker Road. This waterline will close a loop allowing for better service to customers along Clovis Barker.

History and Current Status

This project was included in the Impact Fee calculations.

Operating Budget Impact

Basis for Estimate	2002/03	2003/04	2004/05	2005/06	2006/07	2007/08	2008/09	2009/10	2010/11	2011/12

City of San Marcos
Fiscal Years 2003-2012
Capital Improvements Program Project Input Form

Project Name:	Davis Lane 12" Water Line					Project Category:		Water				
Department:	Engineering/ W & WW Utilities					Project Manager:		Engineering				
Project Costs:	Prior Funding	Yr. 03/04	Yr. 04/05	Yr. 05/06	Yr. 06/07	Yr. 07/08	Yr. 08/09	Yr. 09/10	Yr. 10/11	Yr. 11/12	Yr. 12/13	Total
Design/Studies		-	-	-	-	-	-	-	-	-	-	-
Land/R.O.W.	-	-	-	-	-	-	-	-	-	-	-	-
Construction		253,000					-					253,000
Equipment	-	-	-	-	-	-	-	-	-	-	-	-
Other Costs	-	-	-	-	-	-	-	-	-	-	-	-
Contingency Funds	-		-	-	-	-	-	-	-	-	-	-
Total	**$0**	**$253,000**	**$0**	**$0**	**$0**	**$0**	**$0**	**$0**	**$0**	**$0**	**$0**	**$253,000**
Funding Sources:	Prior Funding	Yr. 03/04	Yr. 04/05	Yr. 05/06	Yr. 06/07	Yr. 07/08	Yr. 08/09	Yr. 09/10	Yr. 10/11	Yr. 11/12	Yr. 12/13	Total
Operating Transfer	-	-	-	-	-	-	-	-	-	-	-	-
(Grants)	-	-	-	-	-	-	-	-	-	-	-	-
Revenue Bonds	40,000	-	-	-	-	-	-	-	-	-	-	40,000
Cert. of Obligation	-	-	-	-	-	-	-	-	-	-	-	-
G. O. Bonds	-	-	-	-	-	-	-	-	-	-	-	-
Impact Fees	-	-			-	-	-	-	-	-	-	-
Total	**$40,000**	**$0**	**$0**	**$0**	**$0**	**$0**	**$0**	**$0**	**$0**	**$0**	**$0**	**$40,000**

Description and Purpose

Construct 12" water main along Davis Lane from 960 feet west of River Road 2700 feet along Davis Lane. This project was part of a Davis Lane project, and the City was unable to obtain the necessary right-of-way, so construction has been delayed.

History and Current Status

This project was included in the Impact Fee calculations.

Operating Budget Impact

Basis for Estimate	2002/03	2003/04	2004/05	2005/06	2006/07	2007/08	2008/09	2009/10	2010/11	2011/12

City of San Marcos
Fiscal Years 2003-2012
Capital Improvements Program Project Input Form

Project Name:	Stagecoach Trail to McCarty Tank 16-inch W					Project Category:		Water				
Department:	Engineering/ W & WW Utilities					Project Manager:		Engineering				
Project Costs:	Prior Funding	Yr. 13/14	Yr. 14/15	Yr. 15/16	Yr. 16/17	Yr. 17/18	Yr. 18/19	Yr. 19/20	Yr. 20/21	Yr. 21/22	Yr. 22/23	Total
Design/Studies		-	-	50,000	-	-	-	-	-	-	-	50,000
Land/R.O.W.	-	-	-	20,000	-	-	-	-	-	-	-	20,000
Construction												-
Equipment	-	-	-	500,000	-	-	-	-	-	-	-	500,000
Other Costs	-	-	-	-	-	-	-	-	-	-	-	-
Contingency Funds	-		-	56,000	-	-	-	-	-	-	-	56,000
Total		**$0**	**$0**	**$626,000**	**$0**	**$0**	**$0**	**$0**	**$0**	**$0**	**$0**	**$626,000**
Funding Sources:	Prior Funding	Yr. 13/14	Yr. 14/15	Yr. 15/16	Yr. 16/17	Yr. 17/18	Yr. 18/19	Yr. 19/20	Yr. 20/21	Yr. 21/22	Yr. 22/23	Total
Operating Transfer	-	-	-	-	-	-	-	-	-	-	-	-
(Grants)	-	-	-	-	-	-	-	-	-	-	-	-
Revenue Bonds	-	-	-	82,625	-	-	-	-	-	-	-	82,625
Cert. of Obligation	-	-	-	-	-	-	-	-	-	-	-	-
G. O. Bonds	-	-	-	-	-	-	-	-	-	-	-	-
Impact Fees	-	-	-	543,375	-	-	-	-	-	-	-	543,375
Total	**$0**	**$0**	**$0**	**$626,000**	**$0**	**$0**	**$0**	**$0**	**$0**	**$0**	**$0**	**$626,000**

Description and Purpose

Construct 16" water line from Summit Ridge to the McCarty Tank (5800lf). This line will connect to the Craddock to Summit Ridge line (project12) and will be part of the system to connect the McCarty Tank to the RR 12 tank. This facility was recommended in the Water Master Plan.

History and Current Status

This improvement was identified in the Water Master Plan as project #3. Impact fee funding in the amount of $543,375 was calculated as the pro-rata share of the costs associated with new development.

Operating Budget Impact

Basis for Estimate	2002/03	2003/04	2004/05	2005/06	2006/07	2007/08	2008/09	2009/10	2010/11	2011/12

City of San Marcos
Fiscal Years 2003-2012
Capital Improvements Program Project Input Form

Project Name:	Westover Water Improvements					Project Category:		Water				
Department:	Engineering / W & WW Utilities					Project Manager:		Engineering				
Project Costs:	Prior Funding	Yr. 03/04	Yr. 04/05	Yr. 05/06	Yr. 06/07	Yr. 07/08	Yr. 08/09	Yr. 09/10	Yr. 10/11	Yr. 11/12	Yr. 12/13	Total
Design/Studies		25,000	-	-	-	-	-	-	-	-	-	25,000
Land/R.O.W.		-	-	-	-	-	-	-	-	-	-	-
Construction		280,000	-	-	-	-	-	-	-	-	-	280,000
Equipment		-	-	-	-	-	-	-	-	-	-	-
Other Costs		-	-	-	-	-	-	-	-	-	-	-
Contingency Funds		64,000	-	-	-	-	-	-	-	-	-	64,000
Total		**$369,000**	**$0**	**$0**	**$0**	**$0**	**$0**	**$0**	**$0**	**$0**	**$0**	**$369,000**
Funding Sources:	Prior Funding	Yr. 03/04	Yr. 04/05	Yr. 05/06	Yr. 06/07	Yr. 07/08	Yr. 08/09	Yr. 09/10	Yr. 10/11	Yr. 11/12	Yr. 12/13	Total
Operating Transfer	-	-	-	-	-	-	-	-	-	-	-	-
(Grants)	-	-	-	-	-	-	-	-	-	-	-	-
Revenue Bonds	369,000	-	-	-	-	-	-	-	-	-	-	369,000
Cert. of Obligation	-	-	-	-	-	-	-	-	-	-	-	-
G. O. Bonds	-	-	-	-	-	-	-	-	-	-	-	-
Other	-	-	-	-	-	-	-	-	-	-	-	-
Total	**$369,000**	**$0**	**$0**	**$0**	**$0**	**$0**	**$0**	**$0**	**$0**	**$0**	**$0**	**$369,000**

Description and Purpose

Construct 2500 lf of 8" water line in Clyde, Earle and DelMar between Bishop and Girard. These water lines will be constructed with the Westover Street Improvement Project and will complete the water grid in this area.

History and Current Status

The design for this project is underway.

Operating Budget Impact

Basis for Estimate	2002/03	2003/04	2004/05	2005/06	2006/07	2007/08	2008/09	2009/10	2010/11	2011/12

City of San Marcos
Fiscal Years 2003-2012
Capital Improvements Program Project Input Form

Project Name:	Camino Real Transmission Imp Phase I					Project Category:		Water				
Department:	Engineering / W & WW Utilities					Project Manager:		Engineering				
Project Costs:	Prior Funding	Yr. 03/04	Yr. 04/05	Yr. 05/06	Yr. 06/07	Yr. 07/08	Yr. 08/09	Yr. 09/10	Yr. 10/11	Yr. 11/12	Yr. 12/13	Total
Design/Studies		400,000	-	-	-	-	-	-	-	-	-	400,000
Land/R.O.W.	-	-	50,000	-	-	-	-	-	-	-	-	50,000
Construction	-		3,115,000	-	-	-	-	-	-	-	-	3,115,000
Equipment	-	-	-	-	-	-	-	-	-	-	-	-
Other Costs	-	-	-	-	-	-	-	-	-	-	-	-
Contingency Funds	-		419,000	-	-	-	-	-	-	-	-	419,000
Total	**$0**	**$400,000**	**$3,584,000**	**$0**	**$0**	**$0**	**$0**	**$0**	**$0**	**$0**	**$0**	**$3,984,000**
Funding Sources:	Prior Funding	Yr. 03/04	Yr. 04/05	Yr. 05/06	Yr. 06/07	Yr. 07/08	Yr. 08/09	Yr. 09/10	Yr. 10/11	Yr. 11/12	Yr. 12/13	Total
Operating Transfer	-	-	-	-	-	-	-	-	-	-	-	-
(Grants)	-	-	-	-	-	-	-	-	-	-	-	-
Revenue Bonds	-	-	3,584,000	-	-	-	-	-	-	-	-	3,584,000
Cert. of Obligation	-	-	-	-	-	-	-	-	-	-	-	-
G. O. Bonds	-	-	-	-	-	-	-	-	-	-	-	-
Impact Fees	-	400,000	-	-	-	-	-	-	-	-	-	400,000
Total	**$0**	**$400,000**	**$3,584,000**	**$0**	**$0**	**$0**	**$0**	**$0**	**$0**	**$0**	**$0**	**$3,984,000**

Description and Purpose

Construct 30" water line along Old Bastrop Hwy from the Surface Water Treatment Plant to Staples Road (FM 621). This is a distance of 16,900 lf and includes a segment under the San Marcos River. This water line is the first segment of a major transmission main to distribute water from the Surface Water Treatment Plant to the Southeast area of San Marcos. The recently completed Water Master Plan indicates that this system is required to provide water to future developments planned for this portion of the City's Water Service Area and to provide a source of surface water to existing customers currently relying on groundwater.

History and Current Status

This project was identified in the Water Master plan as project #5. Impact Fee funding in the amount of $2,221,800 was calculated as the pro-rata cost of development over the next ten years for all phases of the El Camino Real Transmission Imp. project.

Operating Budget Impact

Basis for Estimate	2002/03	2003/04	2004/05	2005/06	2006/07	2007/08	2008/09	2009/10	2010/11	2011/12

City of San Marcos
Fiscal Years 2003-2012
Capital Improvements Program Project Input Form

Project Name:	El Camino Real Transmission Imp Phase 2					Project Category:		Water				
Department:	Engineering / W & WW Utilities					Project Manager:		Engineering				
Project Costs:	Prior Funding	Yr. 03/04	Yr. 04/05	Yr. 05/06	Yr. 06/07	Yr. 07/08	Yr. 08/09	Yr. 09/10	Yr. 10/11	Yr. 11/12	Yr. 12/13	Total
Design/Studies		160,000	-	-	-	-	-	-	-	-	-	160,000
Land/R.O.W.	-	30,000	-	-	-	-	-	-	-	-	-	30,000
Construction	-		1,303,000	-	-	-	-	-	-	-	-	1,303,000
Equipment	-	-	-	-	-	-	-	-	-	-	-	-
Other Costs	-	-	-	-	-	-	-	-	-	-	-	-
Contingency Funds	-		100,000	-	-	-	-	-	-	-	-	100,000
Total	**$0**	**$190,000**	**$1,403,000**	**$0**	**$0**	**$0**	**$0**	**$0**	**$0**	**$0**	**$0**	**$1,593,000**
Funding Sources:	Prior Funding	Yr. 03/04	Yr. 04/05	Yr. 05/06	Yr. 06/07	Yr. 07/08	Yr. 08/09	Yr. 09/10	Yr. 10/11	Yr. 11/12	Yr. 12/13	Total
Operating Transfer	-	-	-	-	-	-	-	-	-	-	-	-
(Grants)	-	-	-	-	-	-	-	-	-	-	-	-
Revenue Bonds	-	-	603,000	-	-	-	-	-	-	-	-	603,000
Cert. of Obligation	-	-	-	-	-	-	-	-	-	-	-	-
G. O. Bonds	-	-	-	-	-	-	-	-	-	-	-	-
Impact Fees	-	190,000	800,000	-	-	-	-	-	-	-	-	990,000
Total	**$0**	**$190,000**	**$1,403,000**	**$0**	**$0**	**$0**	**$0**	**$0**	**$0**	**$0**	**$0**	**$1,593,000**

Description and Purpose

Construct 24" transmission main in Old Bastrop Hwy between Staples and Redwood (5,600 lf). Also construct 24" transmission main in Old Bastrop Hwy between Redwood and SH 123 (4700lf). This is the second segment of the transmission main to provide service to the southeastern portion of the City's water service area.

History and Current Status

This alignment and sizing were identified in the Water Master Plan as project #5b.

Operating Budget Impact

Basis for Estimate	2002/03	2003/04	2004/05	2005/06	2006/07	2007/08	2008/09	2009/10	2010/11	2011/12

City of San Marcos
Fiscal Years 2003-2012
Capital Improvements Program Project Input Form

Project Name:	El Camino Real Transmission Improvemen					Project Category:		Water				
Department:	Engineering / W & WW Utilities					Project Manager:		Engineering				
Project Costs:	Prior Funding	Yr. 13/14	Yr. 14/15	Yr. 15/16	Yr. 16/17	Yr. 17/18	Yr. 18/19	Yr. 19/20	Yr. 20/21	Yr. 21/22	Yr. 22/23	Total
Design/Studies		-	120,000	-	-	-	-	-	-	-	-	120,000
Land/R.O.W.	-	-	-	-	-	-	-	-	-	-	-	-
Construction	-		10,000	1,309,000	-	-	-	-	-	-	-	1,319,000
Equipment	-	-	-	-	-	-	-	-	-	-	-	-
Other Costs	-	-	-	-	-	-	-	-	-	-	-	-
Contingency Funds	-		20,000	-	-	-	-	-	-	-	-	20,000
Total	**$0**	**$0**	**$150,000**	**$1,309,000**	**$0**	**$0**	**$0**	**$0**	**$0**	**$0**	**$0**	**$1,459,000**
Funding Sources:	Prior Funding	Yr. 13/14	Yr. 14/15	Yr. 15/16	Yr. 16/17	Yr. 17/18	Yr. 18/19	Yr. 19/20	Yr. 20/21	Yr. 21/22	Yr. 22/23	Total
Operating Transfer	-	-	-	-	-	-	-	-	-	-	-	-
(Grants)	-	-	-	-	-	-	-	-	-	-	-	-
Revenue Bonds	-	-	-	478,000	-	-	-	-	-	-	-	478,000
Cert. of Obligation	-	-	-	-	-	-	-	-	-	-	-	-
G. O. Bonds	-	-	-	-	-	-	-	-	-	-	-	-
Impact Fees	-	-	150,000	831,000	-	-	-	-	-	-	-	981,000
Total	**$0**	**$0**	**$150,000**	**$1,309,000**	**$0**	**$0**	**$0**	**$0**	**$0**	**$0**	**$0**	**$1,459,000**

Description and Purpose

Cosntruct a 24" water distribution main in Old Bastrop Hwy between Hwy 123 and Centerpoint (10,700 lf). This is the 3rd segment of the transmission main to provide water to the southeast segment of the City's water service area. This main sizing and location were recommended in the Water Master Plan.

History and Current Status

This project's sizing and location was identified in the Water Master Plan as project #5c

Operating Budget Impact

Basis for Estimate	2002/03	2003/04	2004/05	2005/06	2006/07	2007/08	2008/09	2009/10	2010/11	2011/12

City of San Marcos
Fiscal Years 2003-2012
Capital Improvements Program Project Input Form

Project Name:	12-inch Comanche to University Water					Project Category:		Water				
Department:	Engineering / W & WW Utilities					Project Manager:		Engineering				
Project Costs:	Prior Funding	Yr. 03/04	Yr. 04/05	Yr. 05/06	Yr. 06/07	Yr. 07/08	Yr. 08/09	Yr. 09/10	Yr. 10/11	Yr. 11/12	Yr. 12/13	Total
Design/Studies	-	-	65,000	-	-	-	-	-	-	-	-	65,000
Land/R.O.W.	-	-	-	-	-	-	-	-	-	-	-	-
Construction	-	-	542,000	-	-	-	-	-	-	-	-	542,000
Equipment	-	-	-	-	-	-	-	-	-	-	-	-
Other Costs	-	-	-	-	-	-	-	-	-	-	-	-
Contingency Funds	-	-	60,000	-	-	-	-	-	-	-	-	60,000
Total	**$0**	**$0**	**$667,000**	**$0**	**$0**	**$0**	**$0**	**$0**	**$0**	**$0**	**$0**	**$667,000**
Funding Sources:	Prior Funding	Yr. 03/04	Yr. 03/04	Yr. 05/06	Yr. 06/07	Yr. 07/08	Yr. 08/09	Yr. 09/10	Yr. 10/11	Yr. 11/12	Yr. 12/13	Total
Operating Transfer	-	-	-	-	-	-	-	-	-	-	-	-
(Grants)	-	-	-	-	-	-	-	-	-	-	-	-
Revenue Bonds	-	-	667,000	-	-	-	-	-	-	-	-	667,000
Cert. of Obligation	-	-	-	-	-	-	-	-	-	-	-	-
G. O. Bonds	-	-	-	-	-	-	-	-	-	-	-	-
Other	-	-	-	-	-	-	-	-	-	-	-	-
Total	**$0**	**$0**	**$667,000**	**$0**	**$0**	**$0**	**$0**	**$0**	**$0**	**$0**	**$0**	**$667,000**

Description and Purpose

Construct 2,800 lf of 12" water line on Comanche at Live Oak to Lindsey, to Fredricksberg, to Pat Garrison and continuing on Pat Garrison to University at Guadalupe. This main will strengthen the distribution network in the center of the City. This main sizing was recommended in the Water Master Plan.

History and Current Status

This project was identified in the Water Master Plan as project # 6.

Operating Budget Impact

Basis for Estimate	2002/03	2003/04	2004/05	2005/06	2006/07	2007/08	2008/09	2009/10	2010/11	2011/12

City of San Marcos
Fiscal Years 2003-2012
Capital Improvements Program Project Input Form

Project Name:	IH 35 S 12" Water from FM 3407 to Civic C	Project Category:	Water
Department:	Engineering / W & WW Utilities	Project Manager:	Engineering

Project Costs:	Prior Funding	Yr. 03/04	Yr. 04/05	Yr. 05/06	Yr. 06/07	Yr. 07/08	Yr. 08/09	Yr. 09/10	Yr. 10/11	Yr. 11/12	Yr. 12/13	Total
Design/Studies		-		-	-	-	-	-	-	-	-	-
Land/R.O.W.	-	-	20,000	-	-	-	-	-	-	-	-	20,000
Construction	-		710,000		-	-	-	-	-	-	-	710,000
Equipment	-	-	-	-	-	-	-	-	-	-	-	-
Other Costs	-	-	-	-	-	-	-	-	-	-	-	-
Contingency Funds	-		50,000		-	-	-	-	-	-	-	50,000
Total	**$0**	**$0**	**$780,000**	**$0**	**$0**	**$0**	**$0**	**$0**	**$0**	**$0**	**$0**	**$780,000**
Funding Sources:	Prior Funding	Yr. 03/04	Yr. 04/05	Yr. 05/06	Yr. 06/07	Yr. 07/08	Yr. 08/09	Yr. 09/10	Yr. 10/11	Yr. 11/12	Yr. 12/13	Total
Operating Transfer	-	-	-	-	-	-	-	-	-	-	-	-
(Grants)	-	-	-	-	-	-	-	-	-	-	-	-
Revenue Bonds	-	-	730,000	-	-	-	-	-	-	-	-	730,000
Cert. of Obligation	-	-	-	-	-	-	-	-	-	-	-	-
G. O. Bonds	-	-	-	-	-	-	-	-	-	-	-	-
Other	-	-	-	-	-	-	-	-	-	-	-	-
Total	**$0**	**$0**	**$730,000**	**$0**	**$0**	**$0**	**$0**	**$0**	**$0**	**$0**	**$0**	**$730,000**

Description and Purpose

Construct approximately 6800lf of 12" water line along the northbound frontage road of IH-35 from near Clovis Barker to Wonder World Drive. The existing water line in this area is primarily 6" AC pipe. This water line will connect existing 12" water in Wonder World to a recently constructed 12" water line in Civic Center Loop. This line will remove line constrictions and provide increased reliability for customers in this portion of the City's service area. This project was recommended in the recent Water Master Plan.

History and Current Status

This project was identified in the Water Master Plan as project #7. It was also included in the Impact Fee calcuations and those funds could be used if available. It is anticipated that deisgn for the project will be completed by Engineering staff.

Operating Budget Impact

Basis for Estimate	2002/03	2003/04	2004/05	2005/06	2006/07	2007/08	2008/09	2009/10	2010/11	2011/12

City of San Marcos
Fiscal Years 2003-2012
Capital Improvements Program Project Input Form

Project Name:	24" Transmission Main from Springlake to Commanche	Project Category:	Water
Department:	Engineering / W & WW Utilities	Project Manager:	Engineering

Project Costs:	Prior Funding	Yr. 03/04	Yr. 04/05	Yr. 05/06	Yr. 06/07	Yr. 07/08	Yr. 08/09	Yr. 09/10	Yr. 10/11	Yr. 11/12	Yr. 12/13	Total
Design/Studies		-	100,000	-	-	-	-	-	-	-	-	100,000
Land/R.O.W.	-	-	20,000	-	-	-	-	-	-	-	-	20,000
Construction	-	-		860,000	-	-	-	-	-	-	-	860,000
Equipment	-	-	-	-	-	-	-	-	-	-	-	-
Other Costs	-	-	-	-	-	-	-	-	-	-	-	-
Contingency Funds	-	-		60,000	-	-	-	-	-	-	-	60,000
Total	**$0**	**$0**	**$120,000**	**$920,000**	**$0**	**$0**	**$0**	**$0**	**$0**	**$0**	**$0**	**$1,040,000**
Funding Sources:	Prior Funding	Yr. 03/04	Yr. 04/05	Yr. 05/06	Yr. 06/07	Yr. 07/08	Yr. 08/09	Yr. 09/10	Yr. 10/11	Yr. 11/12	Yr. 12/13	Total
Operating Transfer	-	-	-	-	-	-	-	-	-	-	-	-
(Grants)	-	-	-	-	-	-	-	-	-	-	-	-
Revenue Bonds	-	-	120,000	920,000	-	-	-	-	-	-	-	1,040,000
Cert. of Obligation	-	-	-	-	-	-	-	-	-	-	-	-
G. O. Bonds	-	-	-	-	-	-	-	-	-	-	-	-
Other	-	-	-	-	-	-	-	-	-	-	-	-
Total	**$0**	**$0**	**$120,000**	**$920,000**	**$0**	**$0**	**$0**	**$0**	**$0**	**$0**	**$0**	**$1,040,000**

Description and Purpose

Construct 5200 lf of 24" water line from Spring Lake to Comanche. This transmission main will increase the quantity of surface water that can be delivered to the Comanche Tank.

History and Current Status

This project was identified in the Water Master Plan as project # 8. This project is included in the Impact Fee calculations and can be used if available.

Operating Budget Impact

Basis for Estimate	2002/03	2003/04	2004/05	2005/06	2006/07	2007/08	2008/09	2009/10	2010/11	2011/12

City of San Marcos
Fiscal Years 2003-2012
Capital Improvements Program Project Input Form

Project Name:	Posey Road 12-inch Water - Old Bastrop to Hunter					Project Category:		Water				
Department:	Engineering/ W & WW Utilities					Project Manager:		Engineering				
Project Costs:	Prior Funding	Yr. 23/24	Yr. 24/25	Yr. 25/26	Yr. 26/27	Yr. 27/28	Yr. 28/29	Yr. 29/30	Yr. 30/31	Yr. 31/32	Yr. 32/33	Total
Design/Studies		300,000	-	-	-	-			-	-	-	300,000
Land/R.O.W.	-	59,000	-	-	-	-			-	-	-	59,000
Construction		2,000,000										2,000,000
Equipment	-	-	-	-	-	-	-		-	-	-	-
Other Costs	-	-	-	-	-	-	-		-	-	-	-
Contingency Funds	-		-	-	-	-	-		-	-	-	-
Total		**$2,359,000**	**$0**	**$0**	**$0**	**$0**	**$0**	**$0**	**$0**	**$0**	**$0**	**$2,359,000**
Funding Sources:	Prior Funding	Yr. 23/24	Yr. 24/25	Yr. 25/26	Yr. 26/27	Yr. 27/28	Yr. 28/29	Yr. 29/30	Yr. 30/31	Yr. 31/32	Yr. 32/33	Total
Operating Transfer	-	-	-	-	-	-	-	-	-	-	-	-
(Grants)	-	-	-	-	-	-	-	-	-	-	-	-
Revenue Bonds	-	2,359,000	-	-	-	-			-	-	-	2,359,000
Cert. of Obligation	-	-	-	-	-	-	-	-	-	-	-	-
G. O. Bonds	-	-	-	-	-	-	-	-	-	-	-	-
Other	-	-	-	-	-	-	-	-	-	-	-	-
Total	**$0**	**$2,359,000**	**$0**	**$0**	**$0**	**$0**	**$0**	**$0**	**$0**	**$0**	**$0**	**$2,359,000**

Description and Purpose

Construct a 12" main in Posey Road from Hunter Rd to Old Bastrop Hwy. (10700lf). This facility will provide a connection from the new distribution mains on Old Bastrop Hwy to the Oakridge and Deerwood Estates service area as well as open Posey Road for development. This facility was recommended in the Water Master Plan.

History and Current Status

This project was identified in the Water Master Plan as project #9. It was also included in the Impact Fee calculations and impact fee funding may be used if available.

Operating Budget Impact

Basis for Estimate	2002/03	2003/04	2004/05	2005/06	2006/07	2007/08	2008/09	2009/10	2010/11	2011/12

City of San Marcos
Fiscal Years 2003-2012
Capital Improvements Program Project Input Form

Project Name:	Old Bastrop Hwy 16-inch - Centerpoint to Posey					Project Category:		Water				
Department:	Engineering/ W & WW Utilities					Project Manager:		Engineering				
Project Costs:	Prior Funding	Yr. 13/14	Yr. 14/15	Yr. 15/16	Yr. 16/17	Yr. 17/18	Yr. 18/19	Yr. 19/20	Yr. 20/21	Yr. 21/22	Yr. 22/23	Total
Design/Studies		-	-	-	-		20,000		-		-	20,000
Land/R.O.W.	-	-	-	-	-		20,000		-		-	20,000
Construction							510,000					510,000
Equipment	-	-	-	-	-		-	-	-		-	-
Other Costs	-	-	-	-	-		-	-	-		-	-
Contingency Funds	-		-	-	-		60,000		-		-	60,000
Total		**$0**	**$0**	**$0**	**$0**	**$0**	**$610,000**	**$0**	**$0**	**$0**	**$0**	**$610,000**
Funding Sources:	Prior Funding	Yr. 13/14	Yr. 14/15	Yr. 15/16	Yr. 16/17	Yr. 17/18	Yr. 18/19	Yr. 19/20	Yr. 20/21	Yr. 21/22	Yr. 22/23	Total
Operating Transfer	-	-	-	-	-	-	-	-	-	-	-	-
(Grants)	-	-	-	-	-	-	-	-	-	-	-	-
Revenue Bonds	-	-	-	-	-		610,000		-		-	610,000
Cert. of Obligation	-	-	-	-	-	-	-	-	-	-	-	-
G. O. Bonds	-	-	-	-	-	-	-	-	-	-	-	-
Other	-	-	-	-	-	-	-	-	-	-	-	-
Total	**$0**	**$0**	**$0**	**$0**	**$0**	**$0**	**$610,000**	**$0**	**$0**	**$0**	**$0**	**$610,000**

Description and Purpose

Construct a 16" water line in Old Bastrop Highway from Centerpoint Rd to Posey Road (5700lf). This line would provide service to and area of the City's CCN not currently served by water. This facility was recommended in the Water Master Plan.

History and Current Status

This project was identified in the Water Master Plan as project #10. It was also included in the Impact Fee calculations and impact fee may be used to fund the project if available.

Operating Budget Impact

Basis for Estimate	2002/03	2003/04	2004/05	2005/06	2006/07	2007/08	2008/09	2009/10	2010/11	2011/12

City of San Marcos
Fiscal Years 2003-2012
Capital Improvements Program Project Input Form

Project Name:	12" Water Line Centerpoint to Southridge Estates					Project Category:		Water				
Department:	Engineering / W & WW Utilities					Project Manager:		Engineering				
Project Costs:	Prior Funding	Yr. 13/14	Yr. 14/15	Yr. 15/16	Yr. 16/17	Yr. 17/18	Yr. 18/19	Yr. 19/20	Yr. 20/21	Yr. 21/22	Yr. 22/23	Total
Design/Studies		-	-	-		-	100,000	-	-	-	-	100,000
Land/R.O.W.	-	-	-	-		-	50,000	-	-	-	-	50,000
Construction	-		-	-	-		675,000	-	-	-	-	675,000
Equipment	-	-	-	-	-	-	-	-	-	-	-	-
Other Costs	-	-	-	-	-	-	-	-	-	-	-	-
Contingency Funds	-		-	-	-		39,000	-	-	-	-	39,000
Total	**$0**	**$0**	**$0**	**$0**	**$0**	**$0**	**$864,000**	**$0**	**$0**	**$0**	**$0**	**$864,000**
Funding Sources:	Prior Funding	Yr. 13/14	Yr. 14/15	Yr. 15/16	Yr. 16/17	Yr. 17/18	Yr. 18/19	Yr. 19/20	Yr. 20/21	Yr. 21/22	Yr. 22/23	Total
Operating Transfer	-	-	-	-	-	-	-	-	-	-	-	-
(Grants)	-	-	-	-	-	-	-	-	-	-	-	-
Revenue Bonds	-	-	-	-			864,000	-	-	-	-	864,000
Cert. of Obligation	-	-	-	-	-	-	-	-	-	-	-	-
G. O. Bonds	-	-	-	-	-	-	-	-	-	-	-	-
Other	-	-	-	-	-	-	-	-	-	-	-	-
Total	**$0**	**$0**	**$0**	**$0**	**$0**	**$0**	**$864,000**	**$0**	**$0**	**$0**	**$0**	**$864,000**

Description and Purpose

Construct a 12" water line from Old Bastrop Road and Centerpoint along Centerpoint to Southridge Estates. This area is currently served by 2" water lines which do not have capacity for future development. Extension of a 12" line would also allow fire protection for this area of the City's water service area. This project was identified in the Water Master Plan.

History and Current Status

This project was identified in the Water Master Plan as project #11. It was also a project in the Impact Fee study and impact funding may be used if available.

Operating Budget Impact

Basis for Estimate	2002/03	2003/04	2004/05	2005/06	2006/07	2007/08	2008/09	2009/10	2010/11	2011/12

City of San Marcos
Fiscal Years 2003-2012
Capital Improvements Program Project Input Form

Project Name:	Purgatory Creek Park 16-inch W					Project Category:		Water				
Department:	Engineering / W & WW Utilities					Project Manager:		Engineering				
Project Costs:	Prior Funding	Yr. 03/04	Yr. 04/05	Yr. 05/06	Yr. 06/07	Yr. 07/08	Yr. 08/09	Yr. 09/10	Yr. 10/11	Yr. 11/12	Yr. 12/13	Total
Design/Studies		100,000	-	-	-	-	-	-	-	-	-	100,000
Land/R.O.W.	-	18,000	-	-	-	-	-	-	-	-	-	18,000
Construction	-		700,000	-	-	-	-	-	-	-	-	700,000
Equipment	-	-	-	-	-	-	-	-	-	-	-	-
Other Costs	-	-	-	-	-	-	-	-	-	-	-	-
Contingency Funds	-		100,000	-	-	-	-	-	-	-	-	100,000
Total	**$0**	**$118,000**	**$800,000**	**$0**	**$0**	**$0**	**$0**	**$0**	**$0**	**$0**	**$0**	**$918,000**
Funding Sources:	Prior Funding	Yr. 03/04	Yr. 04/05	Yr. 05/06	Yr. 06/07	Yr. 07/08	Yr. 08/09	Yr. 09/10	Yr. 10/11	Yr. 11/12	Yr. 12/13	Total
Operating Transfer	-	-	-	-	-	-	-	-	-	-	-	-
(Grants)	-	-	-	-	-	-	-	-	-	-	-	-
Revenue Bonds	-	-	526,770	-	-	-	-	-	-	-	-	526,770
Cert. of Obligation	-	-	-	-	-	-	-	-	-	-	-	-
G. O. Bonds	-	-	-	-	-	-	-	-	-	-	-	-
Impact Fees	-	118,000	273,230	-	-	-	-	-	-	-	-	391,230
Total	**$0**	**$118,000**	**$800,000**	**$0**	**$0**	**$0**	**$0**	**$0**	**$0**	**$0**	**$0**	**$918,000**

Description and Purpose

Construct 16" water line from Craddock at Franklin to Stagecoach Trail. This line will provide a source of surface water to the McCarty Tank from the upper pressure plane thereby increasing capacity for new development and providing system reliability of existing customers. The design of this line will be completed with the planning of the Purgatory Creek Park Master Plan.

History and Current Status

This project was identified in the Water Master Plan as project #12. Impact Fee funding in the amount of $391,230 was calculated as the pro-rata share of the cost associated with development over the next 10-years.

Operating Budget Impact

Basis for Estimate	2002/03	2003/04	2004/05	2005/06	2006/07	2007/08	2008/09	2009/10	2010/11	2011/12

City of San Marcos
Fiscal Years 2003-2012
Capital Improvements Program Project Input Form

Project Name:	Post Road- City Limits to Champions 16"					Project Category:		Water				
Department:	Engineering/ W & WW Utilities					Project Manager:		Engineering				
Project Costs:	Prior Funding	Yr. 13/14	Yr. 14/15	Yr. 15/16	Yr. 16/17	Yr. 17/18	Yr. 18/19	Yr. 19/20	Yr. 20/21	Yr. 21/22	Yr. 22/23	Total
Design/Studies		-	300,000	-		-	-			-	-	300,000
Land/R.O.W.	-	-	200,000	-		-	-		-	-	-	200,000
Construction			2,163,000									2,163,000
Equipment	-	-		-		-	-	-	-	-	-	-
Other Costs	-	-		-		-	-	-	-	-	-	-
Contingency Funds	-			-		-	-	-	-	-	-	-
Total		**$0**	**$2,663,000**	**$0**	**$0**	**$0**	**$0**	**$0**	**$0**	**$0**	**$0**	**$2,663,000**
Funding Sources:	Prior Funding	Yr. 13/14	Yr. 14/15	Yr. 15/16	Yr. 16/17	Yr. 17/18	Yr. 18/19	Yr. 19/20	Yr. 20/21	Yr. 21/22	Yr. 22/23	Total
Operating Transfer	-	-	-	-	-	-	-	-	-	-	-	-
(Grants)	-	-	-	-	-	-	-	-	-	-	-	-
Revenue Bonds	-	-	2,663,000	-		-	-			-	-	2,663,000
Cert. of Obligation	-	-	-	-	-	-	-	-	-	-	-	-
G. O. Bonds	-	-	-	-	-	-	-	-	-	-	-	-
Other	-	-	-	-	-	-	-	-	-	-	-	-
Total	**$0**	**$0**	**$2,663,000**	**$0**	**$0**	**$0**	**$0**	**$0**	**$0**	**$0**	**$0**	**$2,663,000**

Description and Purpose

Construct 16" water line along Post Road from Moss Cliff to Yarrington. This 18,400 lf line would extend water service to the limits of the City's CCN. This water line was recommended in the Water Master Plan.

History and Current Status

This project is included in the Impact Fee calculations and impact fee funds can be used if available.

Operating Budget Impact

Basis for Estimate	2002/03	2003/04	2004/05	2005/06	2006/07	2007/08	2008/09	2009/10	2010/11	2011/12

City of San Marcos
Fiscal Years 2003-2012
Capital Improvements Program Project Input Form

Project Name:	River Ridge 16"					Project Category:		Water				
Department:	Engineering/ W & WW Utilities					Project Manager:		Engineering				
Project Costs:	Prior Funding	Yr. 13/14	Yr. 14/15	Yr. 15/16	Yr. 16/17	Yr. 17/18	Yr. 18/19	Yr. 19/20	Yr. 20/21	Yr. 21/22	Yr. 22/23	Total
Design/Studies		80,000			-	-	-	-	-	-	-	80,000
Land/R.O.W.	-	65,000	-			-	-	-	-	-	-	65,000
Construction		572,000										572,000
Equipment	-	-	-		-	-	-	-	-	-	-	-
Other Costs	-	-	-		-	-	-	-	-	-	-	-
Contingency Funds	-	50,000	-			-	-	-	-	-	-	50,000
Total		**$767,000**	**$0**	**$0**	**$0**	**$0**	**$0**	**$0**	**$0**	**$0**	**$0**	**$767,000**
Funding Sources:	Prior Funding	Yr. 13/14	Yr. 14/15	Yr. 15/16	Yr. 16/17	Yr. 17/18	Yr. 18/19	Yr. 19/20	Yr. 20/21	Yr. 21/22	Yr. 22/23	Total
Operating Transfer	-	-	-	-	-	-	-	-	-	-	-	-
(Grants)	-	-	-	-	-	-	-	-	-	-	-	-
Revenue Bonds	-	-	-	195,000	572,000	-	-	-	-	-	-	767,000
Cert. of Obligation	-	-	-	-	-	-	-	-	-	-	-	-
G. O. Bonds	-	-	-	-	-	-	-	-	-	-	-	-
Other	-	-	-	-	-	-	-	-	-	-	-	-
Total	**$0**	**$0**	**$0**	**$195,000**	**$572,000**	**$0**	**$0**	**$0**	**$0**	**$0**	**$0**	**$767,000**

Description and Purpose

Construct a 12" line along the proposed extension of River Ridge from IH-35 to SH 21 (8100lf). This water line would connect with the City lines at the City of San Marcos Airport and along IH-35 and provide service and a loop to this portion of the City's CCN. This project was recommended in the Water Master Plan.

History and Current Status

This project was identified in the Water Master Plan as project #14. It was also include in the Impact Fee calculations and impact fee funds can be used if available.

Operating Budget Impact

Basis for Estimate	2002/03	2003/04	2004/05	2005/06	2006/07	2007/08	2008/09	2009/10	2010/11	2011/12

City of San Marcos
Fiscal Years 2003-2012
Capital Improvements Program Project Input Form

Project Name:	Hunter Road 12-inch Water - Posey to Centerpoint					Project Category:		Water				
Department:	Engineering/ W & WW Utilities					Project Manager:		Engineering				
Project Costs:	Prior Funding	Yr. 13/14	Yr. 14/15	Yr. 15/16	Yr. 16/17	Yr. 17/18	Yr. 18/19	Yr. 19/20	Yr. 20/21	Yr. 21/22	Yr. 22/23	Total
Design/Studies		-	-		-	-	-	-	-	-	-	-
Land/R.O.W.	-	-	-	75,000	-		-	-	-	-	-	75,000
Construction				500,000								500,000
Equipment	-	-	-	-	-	-	-	-	-	-	-	-
Other Costs	-	-	-	-	-	-	-	-	-	-	-	-
Contingency Funds	-		-	28,000	-		-	-	-	-	-	28,000
Total		**$0**	**$0**	**$603,000**	**$0**	**$0**	**$0**	**$0**	**$0**	**$0**	**$0**	**$603,000**
Funding Sources:	Prior Funding	Yr. 13/14	Yr. 14/15	Yr. 15/16	Yr. 16/17	Yr. 17/18	Yr. 18/19	Yr. 19/20	Yr. 20/21	Yr. 21/22	Yr. 22/23	Total
Operating Transfer	-	-	-	-	-	-	-	-	-	-	-	-
(Grants)	-	-	-	-	-	-	-	-	-	-	-	-
Revenue Bonds	-	-	-	603,000	-		-	-	-	-	-	603,000
Cert. of Obligation	-	-	-	-	-	-	-	-	-	-	-	-
G. O. Bonds	-	-	-	-	-	-	-	-	-	-	-	-
Other	-	-	-	-	-	-	-	-	-	-	-	-
Total	**$0**	**$0**	**$0**	**$603,000**	**$0**	**$0**	**$0**	**$0**	**$0**	**$0**	**$0**	**$603,000**

Description and Purpose

Construct or oversize 12" water line along Hunter Road between Centerpoint and Posey Road (6,400lf). This facility would extend service from the SWTP to an area currently not served. This facility would also be a part of the City's transmission network for the 826 pressure plane to this portion of the CCN. This facility was recommended in the Water Master Plan.

History and Current Status

This project is identified in the Water Master Plan as project #15. It was also included in the calculation of impact fess and impact fees may be used for funding if available.

Operating Budget Impact

Basis for Estimate	2002/03	2003/04	2004/05	2005/06	2006/07	2007/08	2008/09	2009/10	2010/11	2011/12

City of San Marcos
Fiscal Years 2003-2012
Capital Improvements Program Project Input Form

Project Name:	S Bishop 12-inch Water - Belvin to FM3407					Project Category:		Water				
Department:	Engineering/W & WW Utilities					Project Manager:		Engineering				
Project Costs:	Prior Funding	Yr. 03/04	Yr. 04/05	Yr. 05/06	Yr. 06/07	Yr. 07/08	Yr. 08/09	Yr. 09/10	Yr. 10/11	Yr. 11/12	Yr. 12/13	Total
Design/Studies		-	-			-	-	40,000	-	-	-	40,000
Land/R.O.W.	-	-	-	-	-	-	-	-	-	-	-	-
Construction								450,000				450,000
Equipment	-	-	-	-	-	-	-	-	-	-	-	-
Other Costs	-	-	-	-	-	-	-	-	-	-	-	-
Contingency Funds	-		-	-		-	-	16,000	-	-	-	16,000
Total		**$0**	**$0**	**$0**	**$0**	**$0**	**$0**	**$506,000**	**$0**	**$0**	**$0**	**$506,000**
Funding Sources:	Prior Funding	Yr. 03/04	Yr. 04/05	Yr. 05/06	Yr. 06/07	Yr. 07/08	Yr. 08/09	Yr. 09/10	Yr. 10/11	Yr. 11/12	Yr. 12/13	Total
Operating Transfer	-	-	-	-	-	-	-	-	-	-	-	-
(Grants)	-	-	-	-	-	-	-	-	-	-	-	-
Revenue Bonds	-	-	-	-	466,000	-	-	-	-	-	-	466,000
Cert. of Obligation	-	-	-	-	-	-	-	-	-	-	-	-
G. O. Bonds	-	-	-	-	-	-	-	-	-	-	-	-
Impact Fees	-	-		40,000	-	-	-	-	-	-	-	40,000
Total	**$0**	**$0**	**$0**	**$40,000**	**$466,000**	**$0**	**$0**	**$0**	**$0**	**$0**	**$0**	**$506,000**

Description and Purpose

Construct a 12" water line in the extension of S Bishop Street from Belvin to Wonder World (FM 3407). This 5400lf extension would provide service along the new roadway extension and strengthen the distribution network in this area.

History and Current Status

This project was identified in the Water Master Plan as project #16. It was also included in the impact fee calculations and funding from impact fees can be used if available.

Operating Budget Impact

Basis for Estimate	2002/03	2003/04	2004/05	2005/06	2006/07	2007/08	2008/09	2009/10	2010/11	2011/12

City of San Marcos
Fiscal Years 2003-2012
Capital Improvements Program Project Input Form

Project Name:	Leah Dr 12-inch Water - Cottonwood Pkwy to Civic Center					Project Category:		Water				
Department:	Engineering/W & WW Utilities					Project Manager:		Engineering				
Project Costs:	Prior Funding	Yr. 03/04	Yr. 04/05	Yr. 05/06	Yr. 06/07	Yr. 07/08	Yr. 08/09	Yr. 09/10	Yr. 10/11	Yr. 11/12	Yr. 12/13	Total
Design/Studies		-	-		-	-	-	-	-	-	-	-
Land/R.O.W.	-	-	-		40,000	-	-	-	-	-	-	40,000
Construction						225,000						225,000
Equipment	-	-	-	-	-	-	-	-	-	-	-	-
Other Costs	-	-	-	-	-	-	-	-	-	-	-	-
Contingency Funds	-		-	-		29,000	-	-	-	-	-	29,000
Total		**$0**	**$0**	**$0**	**$40,000**	**$254,000**	**$0**	**$0**	**$0**	**$0**	**$0**	**$294,000**
Funding Sources:	Prior Funding	Yr. 03/04	Yr. 04/05	Yr. 05/06	Yr. 06/07	Yr. 07/08	Yr. 08/09	Yr. 09/10	Yr. 10/11	Yr. 11/12	Yr. 12/13	Total
Operating Transfer	-	-	-	-	-	-	-	-	-	-	-	-
(Grants)	-	-	-	-	-	-	-	-	-	-	-	-
Revenue Bonds	-	-	-	-	254,000	-	-	-	-	-	-	254,000
Cert. of Obligation	-	-	-	-	-	-	-	-	-	-	-	-
G. O. Bonds	-	-	-	-	-	-	-	-	-	-	-	-
Impact Fees	-	-	-		40,000	-	-	-	-	-	-	40,000
Total	**$0**	**$0**	**$0**	**$0**	**$294,000**	**$0**	**$0**	**$0**	**$0**	**$0**	**$0**	**$294,000**

Description and Purpose

Construct a 12" water line in the extension of Leah Drive from Cottonwood Parkway to Civic Center Loop (3100lf). This line was recommended in the Water Master Plan to increase system reliability. This project will be coordinated with the roadway extension project.

History and Current Status

This project is identified in the Water Master Plan as project #17. It was also included in the Impact Fee calulcations and imapct fees can be used to fund the project if available. It is anticipated that the design for the project will be completed by Engineering Dept. staff.

Operating Budget Impact

Basis for Estimate	2002/03	2003/04	2004/05	2005/06	2006/07	2007/08	2008/09	2009/10	2010/11	2011/12

City of San Marcos
Fiscal Years 2003-2012
Capital Improvements Program Project Input Form

Project Name:	Airport 12-inch Water - River Ridge to WM					Project Category:		Water				
Department:	Engineering/W & WW Utilities					Project Manager:		Engineering				
Project Costs:	Prior Funding	Yr. 23/24	Yr. 24/25	Yr. 25/26	Yr. 26/27	Yr. 27/28	Yr. 28/29	Yr. 29/30	Yr. 30/31	Yr. 31/32	Yr. 32/33	Total
Design/Studies		-	-	-		-	-	-	-	-	-	-
Land/R.O.W.	-	-	-	-		-	-	-	-	-	-	-
Construction					850,000							850,000
Equipment	-	-	-	-	-	-	-	-	-	-	-	-
Other Costs	-	-	-	-	-	-	-	-	-	-	-	-
Contingency Funds	-		-	-	61,000	-	-	-		-	-	61,000
Total		**$0**	**$0**	**$0**	**$911,000**	**$0**	**$0**	**$0**	**$0**	**$0**	**$0**	**$911,000**
Funding Sources:	Prior Funding	Yr. 23/24	Yr. 24/25	Yr. 25/26	Yr. 26/27	Yr. 27/28	Yr. 28/29	Yr. 29/30	Yr. 30/31	Yr. 31/32	Yr. 32/33	Total
Operating Transfer	-	-	-	-	-	-	-	-	-	-	-	-
(Grants)	-	-	-	-	-	-	-	-	-	-	-	-
Revenue Bonds	-	-	-	-	911,000	-	-	-		-	-	911,000
Cert. of Obligation	-	-	-	-	-	-	-	-	-	-	-	-
G. O. Bonds	-	-	-	-	-	-	-	-	-	-	-	-
Other	-	-	-	-	-	-	-	-	-	-	-	-
Total	**$0**	**$0**	**$0**	**$0**	**$911,000**	**$0**	**$0**	**$0**	**$0**	**$0**	**$0**	**$911,000**

Description and Purpose

Extend the water line in SH-21 approximately 9600lf from the Airport entrance to William Petus Road. This line will accommodate future planned development along SH-21, including expansion of businesses at the airport. This line was recommended in the Water Master Plan.

History and Current Status

This project was identified in the Water Master Plan as project #18. It was also included in the Impact Fee calculations and may be funded from impact fees if availabe. It is anticipated that design of the project will be by Engineering Dept. staff.

Operating Budget Impact

Basis for Estimate	2002/03	2003/04	2004/05	2005/06	2006/07	2007/08	2008/09	2009/10	2010/11	2011/12

City of San Marcos
Fiscal Years 2003-2012
Capital Improvements Program Project Input Form

Project Name:	Old Bastrop Hwy 12-inch - Posey to Francis Harris					Project Category:		Water				
Department:	Engineering/ W & WW Utilities					Project Manager:		Engineering				
Project Costs:	Prior Funding	Yr. 23/24	Yr. 24/25	Yr. 25/26	Yr. 26/27	Yr. 27/28	Yr. 28/29	Yr. 29/30	Yr. 30/31	Yr. 31/32	Yr. 32/33	Total
Design/Studies		40,000	-	-	-		-	-	-		-	40,000
Land/R.O.W.	-	20,000	-	-	-		-	-	-		-	20,000
Construction		300,000										300,000
Equipment	-	-	-	-	-		-	-	-	-	-	-
Other Costs	-	-	-	-	-		-	-	-	-	-	-
Contingency Funds	-	27,000	-	-	-		-	-	-		-	27,000
Total		**$387,000**	**$0**	**$0**	**$0**	**$0**	**$0**	**$0**	**$0**	**$0**	**$0**	**$387,000**
Funding Sources:	Prior Funding	Yr. 23/24	Yr. 24/25	Yr. 25/26	Yr. 26/27	Yr. 27/28	Yr. 28/29	Yr. 29/30	Yr. 30/31	Yr. 31/32	Yr. 32/33	Total
Operating Transfer	-	-	-	-	-	-	-	-	-	-	-	-
(Grants)	-	-	-	-	-	-	-	-	-	-	-	-
Revenue Bonds	-	387,000	-	-	-		-	-	-		-	387,000
Cert. of Obligation	-	-	-	-	-	-	-	-	-	-	-	-
G. O. Bonds	-	-	-	-	-	-	-	-	-	-	-	-
Other	-	-	-	-	-	-	-	-	-	-	-	-
Total	**$0**	**$387,000**	**$0**	**$0**	**$0**	**$0**	**$0**	**$0**	**$0**	**$0**	**$0**	**$387,000**

Description and Purpose

Construct a 12" water line in Old Bastrop Highway from Posey Road to Francis Harris (4100lf). This line would provide service to and area of the City's CCN not currently served by water. This facility was recommended in the Water Master Plan.

History and Current Status

This project was identified in the Water Master Plan as project #19. It was also included in the Impact Fee calculations and impact fee may be used to fund the project if available.

Operating Budget Impact

Basis for Estimate	2002/03	2003/04	2004/05	2005/06	2006/07	2007/08	2008/09	2009/10	2010/11	2011/12

City of San Marcos
Fiscal Years 2003-2012
Capital Improvements Program Project Input Form

Project Name:	IH 35 12-inch - Posey to CCN					Project Category:		Water				
Department:	Engineering/ W & WW Utilities					Project Manager:		Engineering				
Project Costs:	Prior Funding	Yr. 23/24	Yr. 24/25	Yr. 25/26	Yr. 26/27	Yr. 27/28	Yr. 28/29	Yr. 29/30	Yr. 30/31	Yr. 31/32	Yr. 32/33	Total
Design/Studies		-	150,000	-	-	-			-	-	-	150,000
Land/R.O.W.	-	-	24,000	-	-	-			-	-	-	24,000
Construction			888,000									888,000
Equipment	-	-	-	-	-	-	-		-	-	-	-
Other Costs	-	-	-	-	-	-	-		-	-	-	-
Contingency Funds	-		-	-	-	-	-			-	-	-
Total		**$0**	**$1,062,000**	**$0**	**$0**	**$0**	**$0**	**$0**	**$0**	**$0**	**$0**	**$1,062,000**
Funding Sources:	Prior Funding	Yr. 23/24	Yr. 24/25	Yr. 25/26	Yr. 26/27	Yr. 27/28	Yr. 28/29	Yr. 29/30	Yr. 30/31	Yr. 31/32	Yr. 32/33	Total
Operating Transfer	-	-	-	-	-	-	-	-	-	-	-	-
(Grants)	-	-	-	-	-	-	-	-	-	-	-	-
Revenue Bonds	-	-	1,062,000	-	-	-				-	-	1,062,000
Cert. of Obligation	-	-	-	-	-	-	-	-	-	-	-	-
G. O. Bonds	-	-	-	-	-	-	-	-	-	-	-	-
Other	-	-	-	-	-	-	-	-	-	-	-	-
Total	**$0**	**$0**	**$1,062,000**	**$0**	**$0**	**$0**	**$0**	**$0**	**$0**	**$0**	**$0**	**$1,062,000**

Description and Purpose

Construct 12-inch main along north and south bound frontage roads of IH 35 from Posey Road south to the limits of the City's CCN. This project would provide water service and fire protection for developments along the interstate within the City's service area.

History and Current Status

This project was identified in the Water Master Plan as project #20. It was also included in the Impact Fee calculation and impact fee funds may be used if available.

Operating Budget Impact

Basis for Estimate	2002/03	2003/04	2004/05	2005/06	2006/07	2007/08	2008/09	2009/10	2010/11	2011/12

City of San Marcos
Fiscal Years 2003-2012
Capital Improvements Program Project Input Form

Project Name:	Hwy 21 - SWTP tp River Ridge					Project Category:		Water				
Department:	Engineering/ W & WW Utilities					Project Manager:		Engineering				
Project Costs:	Prior Funding	Yr. 13/14	Yr. 14/15	Yr. 15/16	Yr. 16/17	Yr. 17/18	Yr. 18/19	Yr. 19/20	Yr. 20/21	Yr. 21/22	Yr. 22/23	Total
Design/Studies		100,000	-	-		-		-	-	-	-	100,000
Land/R.O.W.	-	-	-	-	-	-		-	-	-	-	-
Construction		556,000										556,000
Equipment	-	-	-	-	-	-		-	-	-	-	-
Other Costs	-	-	-	-	-	-		-	-	-	-	-
Contingency Funds	-		-	-	-	-		-	-	-	-	-
Total		**$656,000**	**$0**	**$0**	**$0**	**$0**	**$0**	**$0**	**$0**	**$0**	**$0**	**$656,000**
Funding Sources:	Prior Funding	Yr. 13/14	Yr. 14/15	Yr. 15/16	Yr. 16/17	Yr. 17/18	Yr. 18/19	Yr. 19/20	Yr. 20/21	Yr. 21/22	Yr. 22/23	Total
Operating Transfer	-	-	-	-	-	-	-	-	-	-	-	-
(Grants)	-	-	-	-	-	-	-	-	-	-	-	-
Revenue Bonds	-	656,000	-	-		-	-	-	-	-	-	656,000
Cert. of Obligation	-	-	-	-	-	-	-	-	-	-	-	-
G. O. Bonds	-	-	-	-	-	-	-	-	-	-	-	-
Other	-	-	-	-	-	-	-	-	-	-	-	-
Total	**$0**	**$656,000**	**$0**	**$0**	**$0**	**$0**	**$0**	**$0**	**$0**	**$0**	**$0**	**$656,000**

Description and Purpose

Construct 16-inch distribution main parallel to Hwy 21 from the Surface Water Treatment Plan (SWTP) to River Ridge. This main will provide an additional source of water from the SWTP to the northern portion of the City's CCN. This facility was identified in the Water Master Plan.

History and Current Status

This project was identified in the Water Master Plan as project #21. It was also included in the Impact Fee calulations and impact fee funds may be used if available.

Operating Budget Impact

Basis for Estimate	2002/03	2003/04	2004/05	2005/06	2006/07	2007/08	2008/09	2009/10	2010/11	2011/12

City of San Marcos
Fiscal Years 2003-2012
Capital Improvements Program Project Input Form

Project Name:	McCarty Road 16-inch Water - IH 35 to Old Bastrop					Project Category:		Water				
Department:	Engineering/ W & WW Utilities					Project Manager:		Engineering				
Project Costs:	Prior Funding	Yr. 13/14	Yr. 14/15	Yr. 15/16	Yr. 16/17	Yr. 17/18	Yr. 18/19	Yr. 19/20	Yr. 20/21	Yr. 21/22	Yr. 22/23	Total
Design/Studies		-	-	120,000	-	-			-	-	-	120,000
Land/R.O.W.	-	-	-	15,000	-	-			-	-	-	15,000
Construction				1,150,000								1,150,000
Equipment	-	-	-	-	-	-	-		-	-	-	-
Other Costs	-	-	-	-	-	-	-		-	-	-	-
Contingency Funds	-		-	65,000	-	-	-			-	-	65,000
Total		**$0**	**$0**	**$1,350,000**	**$0**	**$0**	**$0**	**$0**	**$0**	**$0**	**$0**	**$1,350,000**
Funding Sources:	Prior Funding	Yr. 13/14	Yr. 14/15	Yr. 15/16	Yr. 16/17	Yr. 17/18	Yr. 18/19	Yr. 19/20	Yr. 20/21	Yr. 21/22	Yr. 22/23	Total
Operating Transfer	-	-	-	-	-	-	-	-	-	-	-	-
(Grants)	-	-	-	-	-	-	-	-	-	-	-	-
Revenue Bonds	-	-	-	1,350,000	-	-				-	-	1,350,000
Cert. of Obligation	-	-	-	-	-	-	-	-	-	-	-	-
G. O. Bonds	-	-	-	-	-	-	-	-	-	-	-	-
Other	-	-	-	-	-	-	-	-	-	-	-	-
Total	**$0**	**$0**	**$0**	**$1,350,000**	**$0**	**$0**	**$0**	**$0**	**$0**	**$0**	**$0**	**$1,350,000**

Description and Purpose

Construct a 16" water line along McCarty Road from IH-35 to Old Bastrop Hwy. (8300lf). This facility will provide service to developing areas along McCarty Road. It will also connect the IH-35 main with the main in Old Bastrop Hwy. This facility was recommended in the Water Master Plan.

History and Current Status

This project was identified in the Water Master Plan as project #22. It was also included in the Impact Fee calculation and impact fee funds may be used if available.

Operating Budget Impact

Basis for Estimate	2002/03	2003/04	2004/05	2005/06	2006/07	2007/08	2008/09	2009/10	2010/11	2011/12

City of San Marcos
Fiscal Years 2003-2012
Capital Improvements Program Project Input Form

Project Name:	Centerpoint Rd 24-inch Transmission Main - IH-35 to Old Bastrop Hwy					Project Category:		Water				
Department:	Engineering/ W & WW Utilities					Project Manager:		Engineering				
Project Costs:	Prior Funding	Yr. 13/14	Yr. 14/15	Yr. 15/16	Yr. 16/17	Yr. 17/18	Yr. 18/19	Yr. 19/20	Yr. 20/21	Yr. 21/22	Yr. 22/23	Total
Design/Studies		-	-	90,000	-	-		-	-	-	-	90,000
Land/R.O.W.	-	-	-	20,000	-	-		-	-	-	-	20,000
Construction				800,000								800,000
Equipment	-	-	-	-	-	-	-	-	-	-	-	-
Other Costs	-	-	-	-	-	-	-	-	-	-	-	-
Contingency Funds	-		-	24,000	-	-	-		-	-	-	24,000
Total		**$0**	**$0**	**$934,000**	**$0**	**$0**	**$0**	**$0**	**$0**	**$0**	**$0**	**$934,000**
Funding Sources:	Prior Funding	Yr. 13/14	Yr. 14/15	Yr. 15/16	Yr. 16/17	Yr. 17/18	Yr. 18/19	Yr. 19/20	Yr. 20/21	Yr. 21/22	Yr. 22/23	Total
Operating Transfer	-	-	-	-	-	-	-	-	-	-	-	-
(Grants)	-	-	-	-	-	-	-	-	-	-	-	-
Revenue Bonds	-	-	-	934,000	-	-			-	-	-	934,000
Cert. of Obligation	-	-	-	-	-	-	-	-	-	-	-	-
G. O. Bonds	-	-	-	-	-	-	-	-	-	-	-	-
Other	-	-	-	-	-	-	-	-	-	-	-	-
Total	**$0**	**$0**	**$0**	**$934,000**	**$0**	**$0**	**$0**	**$0**	**$0**	**$0**	**$0**	**$934,000**

Description and Purpose

Construct a 24" distribution main in Centerpoint Road from IH-35 to Old Bastrop Hwy. (6300lf). This facility will provide a connection from the new distribution main in Old Bastrop Hwy to the Outlet Mall area. This facility was recommended in the Water Master Plan.

History and Current Status

This project was identified in the Water Master Plan as project #23. It was also included in the Impact Fee calculations and impact fee funding may be used if available.

Operating Budget Impact

Basis for Estimate	2002/03	2003/04	2004/05	2005/06	2006/07	2007/08	2008/09	2009/10	2010/11	2011/12

City of San Marcos
Fiscal Years 2003-2012
Capital Improvements Program Project Input Form

Project Name:	IH 35 S 12-inch Water - N of McCarty to Centerpoint					Project Category:		Water				
Department:	Engineering/ W & WW Utilities					Project Manager:		Engineering				
Project Costs:	Prior Funding	Yr. 03/04	Yr. 04/05	Yr. 05/06	Yr. 06/07	Yr. 07/08	Yr. 08/09	Yr. 09/10	Yr. 10/11	Yr. 11/12	Yr. 12/13	Total
Design/Studies		-	-	-	-	-		-	-	-	-	-
Land/R.O.W.	-	-	-	-	-	60,000		-	-	-	-	60,000
Construction						590,000						590,000
Equipment	-	-	-	-	-	-	-	-	-	-	-	-
Other Costs	-	-	-	-	-	-	-	-	-	-	-	-
Contingency Funds	-		-	-	-	28,000		-	-	-	-	28,000
Total		**$0**	**$0**	**$0**	**$0**	**$678,000**	**$0**	**$0**	**$0**	**$0**	**$0**	**$678,000**
Funding Sources:	Prior Funding	Yr. 03/04	Yr. 04/05	Yr. 05/06	Yr. 06/07	Yr. 07/08	Yr. 08/09	Yr. 09/10	Yr. 10/11	Yr. 11/12	Yr. 12/13	Total
Operating Transfer	-	-	-	-	-	-	-	-	-	-	-	-
(Grants)	-	-	-	-	-	-	-	-	-	-	-	-
Revenue Bonds	-	-	-	-	-	678,000		-	-	-	-	678,000
Cert. of Obligation	-	-	-	-	-	-	-	-	-	-	-	-
G. O. Bonds	-	-	-	-	-	-	-	-	-	-	-	-
Other	-	-	-	-	-	-	-	-	-	-	-	-
Total	**$0**	**$0**	**$0**	**$0**	**$0**	**$678,000**	**$0**	**$0**	**$0**	**$0**	**$0**	**$678,000**

Description and Purpose

Construct a 12" water line along the west side of IH-35 from North of McCarty to Centerpoint (6300lf). This facility was recommended in the Water Master Plan.

History and Current Status

This line was identified in the Water Master Plan as project #24. It was also included in the Impact Fee calcualtions and impact fees may be used to fund the project if available.

Operating Budget Impact

Basis for Estimate	2002/03	2003/04	2004/05	2005/06	2006/07	2007/08	2008/09	2009/10	2010/11	2011/12

City of San Marcos
Fiscal Years 2003-2012
Capital Improvements Program Project Input Form

Project Name:	Redwood Road 16-inch Water - Hwy 123 to FM 621					Project Category:		Water				
Department:	Engineering/ W & WW Utilities					Project Manager:		Engineering				
Project Costs:	Prior Funding	Yr. 03/04	Yr. 04/05	Yr. 05/06	Yr. 06/07	Yr. 07/08	Yr. 08/09	Yr. 09/10	Yr. 10/11	Yr. 11/12	Yr. 12/13	Total
Design/Studies		-	-		20,000	-		-	-	-	-	20,000
Land/R.O.W.	-	-	-		50,000	-	-	-	-	-	-	50,000
Construction					675,000							675,000
Equipment	-	-	-	-	-	-	-	-	-	-	-	-
Other Costs	-	-	-	-	-	-		-	-	-	-	-
Contingency Funds	-		-		37,000	-		-	-	-	-	37,000
Total		**$0**	**$0**	**$0**	**$782,000**	**$0**	**$0**	**$0**	**$0**	**$0**	**$0**	**$782,000**
Funding Sources:	Prior Funding	Yr. 03/04	Yr. 04/05	Yr. 05/06	Yr. 06/07	Yr. 07/08	Yr. 08/09	Yr. 09/10	Yr. 10/11	Yr. 11/12	Yr. 12/13	Total
Operating Transfer	-	-	-	-	-	-	-	-	-	-	-	-
(Grants)	-	-	-	-	-	-	-	-	-	-	-	-
Revenue Bonds	-	-	-		782,000	-	-	-	-	-	-	782,000
Cert. of Obligation	-	-	-	-	-	-	-	-	-	-	-	-
G. O. Bonds	-	-	-	-	-	-	-	-	-	-	-	-
Other	-	-	-	-	-	-	-	-	-	-	-	-
Total	**$0**	**$0**	**$0**	**$0**	**$782,000**	**$0**	**$0**	**$0**	**$0**	**$0**	**$0**	**$782,000**

Description and Purpose

Construct 16" water line in Redwood Road from Hwy 123 to FM 621 (5400lf). This system will provide a loop for this portion of town. This facility was recommended in the Water Master Plan.

History and Current Status

This project was identified in the Water Master Plan as project #25. It was also included in the Impact Fee calculations and impact fee funds may be used if available. It is anticipated that the design will be completed by the Engineering Dept. staff.

Operating Budget Impact

Basis for Estimate	2002/03	2003/04	2004/05	2005/06	2006/07	2007/08	2008/09	2009/10	2010/11	2011/12

City of San Marcos
Fiscal Years 2003-2012
Capital Improvements Program Project Input Form

Project Name:	Staples Road 16-inch W - DeZavala to Old Bastrop Highway	Project Category:	Water
Department:	Engineering/ W & WW Utilities	Project Manager:	Engineering

Project Costs:	Prior Funding	Yr. 03/04	Yr. 04/05	Yr. 05/06	Yr. 06/07	Yr. 07/08	Yr. 08/09	Yr. 09/10	Yr. 10/11	Yr. 11/12	Yr. 12/13	Total
Design/Studies		-	-	-	-	60,000	-	-	-	-	-	60,000
Land/R.O.W.	-	-	-	-	-	-	-	-	-	-	-	-
Construction						640,000						640,000
Equipment	-	-	-	-	-	-	-	-	-	-	-	-
Other Costs	-	-	-	-	-	-	-	-	-	-	-	-
Contingency Funds	-		-	-	-	32,000	-	-	-	-	-	32,000
Total		**$0**	**$0**	**$0**	**$0**	**$732,000**	**$0**	**$0**	**$0**	**$0**	**$0**	**$732,000**
Funding Sources:	Prior Funding	Yr. 03/04	Yr. 04/05	Yr. 05/06	Yr. 06/07	Yr. 07/08	Yr. 08/09	Yr. 09/10	Yr. 10/11	Yr. 11/12	Yr. 12/13	Total
Operating Transfer	-	-	-	-	-	-	-	-	-	-	-	-
(Grants)	-	-	-	-	-	-	-	-	-	-	-	-
Revenue Bonds	-	-	-	-	-	732,000	-	-	-	-	-	732,000
Cert. of Obligation	-	-	-	-	-	-	-	-	-	-	-	-
G. O. Bonds	-	-	-	-	-	-	-	-	-	-	-	-
Other	-	-	-	-	-	-	-	-	-	-	-	-
Total	**$0**	**$0**	**$0**	**$0**	**$0**	**$732,000**	**$0**	**$0**	**$0**	**$0**	**$0**	**$732,000**

Description and Purpose

Construct 16" water line in FM 621 from Old Bastrop Hwy to De Zavala (6800lf). This water line will provide service to an area not currently served and strengthen the distribution network in the southeast service area. This facility was recommended in the Water Master Plan.

History and Current Status

This project was identified in the Water Master Plan as project #26. It was also included in the Impact Fee calculations and impact fee funds may be used if available.

Operating Budget Impact

Basis for Estimate	2002/03	2003/04	2004/05	2005/06	2006/07	2007/08	2008/09	2009/10	2010/11	2011/12

City of San Marcos
Fiscal Years 2003-2012
Capital Improvements Program Project Input Form

Project Name:	Northeast Elevated Storage Tank					Project Category:		Water				
Department:	Engineering/ W & WW Utilities					Project Manager:		Engineering				
Project Costs:	Prior Funding	Yr. 23/24	Yr. 24/25	Yr. 25/26	Yr. 26/27	Yr. 27/28	Yr. 28/29	Yr. 29/30	Yr. 30/31	Yr. 31/32	Yr. 32/33	Total
Design/Studies		100,000	-	-		-		-			-	100,000
Land/R.O.W.	-	-	-	-		-		-	-	-	-	-
Construction		900,000										900,000
Equipment	-	-	-	-		-		-	-	-	-	-
Other Costs	-	-	-	-		-		-	-	-	-	-
Contingency Funds	-	53,000	-	-		-		-			-	53,000
Total		**$1,053,000**	**$0**	**$0**	**$0**	**$0**	**$0**	**$0**	**$0**	**$0**	**$0**	**$1,053,000**
Funding Sources:	Prior Funding	Yr. 23/24	Yr. 24/25	Yr. 25/26	Yr. 26/27	Yr. 27/28	Yr. 28/29	Yr. 29/30	Yr. 30/31	Yr. 31/32	Yr. 32/33	Total
Operating Transfer	-	-	-	-	-	-	-	-	-	-	-	-
(Grants)	-	-	-	-	-	-	-	-	-	-	-	-
Revenue Bonds	-	1,053,000	-	-		-	-	-			-	1,053,000
Cert. of Obligation	-	-	-	-	-	-	-	-	-	-	-	-
G. O. Bonds	-	-	-	-	-	-	-	-	-	-	-	-
Other	-	-	-	-	-	-	-	-	-	-	-	-
Total	**$0**	**$1,053,000**	**$0**	**$0**	**$0**	**$0**	**$0**	**$0**	**$0**	**$0**	**$0**	**$1,053,000**

Description and Purpose

Construct 0.5 million gallon elevated storage tank in the northeast part of the City. The exact location of the tank will be determined by land availablity and development patterns. This tank is required to provide elevated storage for TCEQ compliance, reduce pumping and maintain system pressure.

History and Current Status

This project was identified in the Water Master Plan as project #21. It was also included in the Impact Fee calulations and impact fee funds may be used if available.

Operating Budget Impact

Basis for Estimate	2002/03	2003/04	2004/05	2005/06	2006/07	2007/08	2008/09	2009/10	2010/11	2011/12

City of San Marcos
Fiscal Years 2003-2012
Capital Improvements Program Project Input Form

Project Name:	Water System Security					Project Category:		Water				
Department:	W & WW Utilities					Project Manager:		W & WW Utilities				
Project Costs:	Prior Funding	Yr. 03/04	Yr. 04/05	Yr. 05/06	Yr. 06/07	Yr. 07/08	Yr. 08/09	Yr. 09/10	Yr. 10/11	Yr. 11/12	Yr. 12/13	Total
Design/Studies		-	-	-	-	-	-	-	-	-	-	-
Land/R.O.W.	-	-	-	-	-	-	-	-	-	-	-	-
Construction		186,284	100,000	100,000	-	-	-	-	-	-	-	386,284
Equipment			-	-	-	-	-	-	-	-	-	-
Other Costs			-	-	-	-	-	-	-	-	-	-
Contingency Funds			-	-	-	-	-	-	-	-	-	-
Total		**$186,284**	**$100,000**	**$100,000**	**$0**	**$0**	**$0**	**$0**	**$0**	**$0**	**$0**	**$386,284**
Funding Sources:	Prior Funding	Yr. 03/04	Yr. 04/05	Yr. 05/06	Yr. 06/07	Yr. 07/08	Yr. 08/09	Yr. 09/10	Yr. 10/11	Yr. 11/12	Yr. 12/13	Total
Operating Transfer	-	-	-	-	-	-	-	-	-	-	-	-
(Grants)	-	-	-	-	-	-	-	-	-	-	-	-
Revenue Bonds	86,284	100,000	100,000	100,000	-	-	-	-	-	-	-	386,284
Cert. of Obligation	-	-	-	-	-	-	-	-	-	-	-	-
G. O. Bonds	-	-	-	-	-	-	-	-	-	-	-	-
Other	-	-	-	-	-	-	-	-	-	-	-	-
Total	**$86,284**	**$100,000**	**$100,000**	**$100,000**	**$0**	**$0**	**$0**	**$0**	**$0**	**$0**	**$0**	**$386,284**

Description and Purpose

This project will assess security vulnerabilities of the water system and implement recommendations for security enhancements to facilities and procedures. The events of September 11, 2001 brought focus to the potential for terrorist acts against public infrastructure. This project will assure the customers of the City system that the City has taken necessary precautions to protect the water system.

History and Current Status

Operating Budget Impact

Basis for Estimate	2002/03	2003/04	2004/05	2005/06	2006/07	2007/08	2008/09	2009/10	2010/11	2011/12

City of San Marcos
Fiscal Years 2003-2012
Capital Improvements Program Project Input Form

Project Name:	Gravel 8" Main					Project Category:		Water				
Department:	Engineering/W & WW Utilities					Project Manager:		Engineering				
Project Costs:	Prior Funding	Yr. 03/04	Yr. 04/05	Yr. 05/06	Yr. 06/07	Yr. 07/08	Yr. 08/09	Yr. 09/10	Yr. 10/11	Yr. 11/12	Yr. 12/13	Total
Design/Studies		-	-		30,000	-	-	-	-	-	-	30,000
Land/R.O.W.	-	-	-	-	-	-	-	-	-	-	-	-
Construction						130,000						130,000
Equipment	-	-	-			-	-	-	-	-	-	-
Other Costs	-	-	-			-	-	-	-	-	-	-
Contingency Funds	-		-			20,000	-	-	-	-	-	20,000
Total		**$0**	**$0**	**$0**	**$30,000**	**$150,000**	**$0**	**$0**	**$0**	**$0**	**$0**	**$180,000**
Funding Sources:	Prior Funding	Yr. 03/04	Yr. 04/05	Yr. 05/06	Yr. 06/07	Yr. 07/08	Yr. 08/09	Yr. 09/10	Yr. 10/11	Yr. 11/12	Yr. 12/13	Total
Operating Transfer	-	-	-	-	-	-	-	-	-	-	-	-
(Grants)	-	-	-	-	-	-	-	-	-	-	-	-
Revenue Bonds	-	-	-		30,000	150,000	-	-	-	-	-	180,000
Cert. of Obligation	-	-	-	-	-	-	-	-	-	-	-	-
G. O. Bonds	-	-	-	-	-	-	-	-	-	-	-	-
Other	-	-	-	-	-	-	-	-	-	-	-	-
Total	**$0**	**$0**	**$0**	**$0**	**$30,000**	**$150,000**	**$0**	**$0**	**$0**	**$0**	**$0**	**$180,000**

Description and Purpose

Construct 8" water line along the extension of Gravel Street to it's intersection with S Bishop (1800lf). This line will provide service to an area not currently being served, and increase system reliability by providing a loop from the existing dead end line in Gravel. This project will be coordinated with the Gravel Street Extension street project

History and Current Status

Operating Budget Impact

Basis for Estimate	2002/03	2003/04	2004/05	2005/06	2006/07	2007/08	2008/09	2009/10	2010/11	2011/12

City of San Marcos
Fiscal Years 2003-2012
Capital Improvements Program Project Input Form

Project Name:	Southwest Fire Hydrant Improvements					Project Category:		Water				
Department:	Engineering/ W & WW Utilities					Project Manager:		Engineering				
Project Costs:	Prior Funding	Yr. 03/04	Yr. 04/05	Yr. 05/06	Yr. 06/07	Yr. 07/08	Yr. 08/09	Yr. 09/10	Yr. 10/11	Yr. 11/12	Yr. 12/13	Total
Design/Studies		-	-	-	-	-		-	-	-	-	-
Land/R.O.W.	-	-	-	-	-	-		-	-	-	-	-
Construction		100,000										100,000
Equipment	-	-	-	-	-	-		-	-	-	-	-
Other Costs	-	-	-	-	-	-		-	-	-	-	-
Contingency Funds	-		-	-	-	-		-	-	-	-	-
Total		**$100,000**	**$0**	**$0**	**$0**	**$0**		**$0**	**$0**	**$0**	**$0**	**$100,000**
Funding Sources:	Prior Funding	Yr. 03/04	Yr. 04/05	Yr. 05/06	Yr. 06/07	Yr. 07/08	Yr. 08/09	Yr. 09/10	Yr. 10/11	Yr. 11/12	Yr. 12/13	Total
Operating Transfer	-	-	-	-	-	-	-	-	-	-	-	-
(Grants)	-	-	-	-	-	-	-	-	-	-	-	-
Revenue Bonds	100,000		-	-	-	-	-	-	-	-	-	100,000
Cert. of Obligation	-	-	-	-	-	-	-	-	-	-	-	-
G. O. Bonds	-	-	-	-	-	-	-	-	-	-	-	-
Other	-	-	-	-	-	-	-	-	-	-	-	-
Total	**$100,000**	**$0**	**$0**	**$0**	**$0**	**$0**	**$0**	**$0**	**$0**	**$0**	**$0**	**$100,000**

Description and Purpose

Install fire hydrants and modify distribution system in recently annexed area to improve fire protection.

History and Current Status

City has discussed improvements with Crystal Clear Water Supply Corporation, the water supplier in this area. Exact locations for improvements will be coordinated with the Fire Dept.

Operating Budget Impact

Basis for Estimate	2002/03	2003/04	2004/05	2005/06	2006/07	2007/08	2008/09	2009/10	2010/11	2011/12

City of San Marcos
Fiscal Years 2003-2012
Capital Improvements Program Project Input Form

Project Name:	Rio Vista Water System Improvements					Project Category:		Water				
Department:	Engineering / W & WW Utilities					Project Manager:		Engineering				
Project Costs:	Prior Funding	Yr. 03/04	Yr. 04/05	Yr. 05/06	Yr. 06/07	Yr. 07/08	Yr. 08/09	Yr. 09/10	Yr. 10/11	Yr. 11/12	Yr. 12/13	Total
Design/Studies			-	-	-	-	-	-	-	-	-	-
Land/R.O.W.	-	45,000	-	-	-	-	-	-	-	-	-	45,000
Construction	-		1,300,000	-	-	-	-	-	-	-	-	1,300,000
Equipment	-	-	-	-	-	-	-	-	-	-	-	-
Other Costs	-	-	-	-	-	-	-	-	-	-	-	-
Contingency Funds	-		150,000	-	-	-	-	-	-	-	-	150,000
Total	**$0**	**$45,000**	**$1,450,000**	**$0**	**$0**	**$0**	**$0**	**$0**	**$0**	**$0**	**$0**	**$1,495,000**
Funding Sources:	Prior Funding	Yr. 03/04	Yr. 04/05	Yr. 05/06	Yr. 06/07	Yr. 07/08	Yr. 08/09	Yr. 09/10	Yr. 10/11	Yr. 11/12	Yr. 12/13	Total
Operating Transfer	-	-	-	-	-	-	-	-	-	-	-	-
(Grants)	-	-	-	-	-	-	-	-	-	-	-	-
Revenue Bonds	150,000	-	1,345,000	-	-	-	-	-	-	-	-	1,495,000
Cert. of Obligation	-	-	-	-	-	-	-	-	-	-	-	-
G. O. Bonds	-	-	-	-	-	-	-	-	-	-	-	-
Other	-	-	-	-	-	-	-	-	-	-	-	-
Total	**$150,000**	**$0**	**$1,345,000**	**$0**	**$0**	**$0**	**$0**	**$0**	**$0**	**$0**	**$0**	**$1,495,000**

Description and Purpose

This project will replace existing water lines in Rio Vista Terrace Subdivision with lines that meet current standards. (approximately 16,000 lf of line) This project will provide improved reliability of service to the residential customers in this subdivision. The project will also upgrade water lines which are deficient due to size or age.

History and Current Status

The project design is underway by City staff. It will be part of an overall project in the area to address water, wastewater, street and drainage improvements.

Operating Budget Impact

Basis for Estimate	2002/03	2003/04	2004/05	2005/06	2006/07	2007/08	2008/09	2009/10	2010/11	2011/12

City of San Marcos
Fiscal Years 2003-2012
Capital Improvements Program Project Input Form

Project Name:	Main Extensions/Replacements					Project Category:		Water				
Department:	Engineering / W & WW Utilities					Project Manager:		Engineering				
Project Costs:	Prior Funding	Yr. 03/04	Yr. 04/05	Yr. 05/06	Yr. 06/07	Yr. 07/08	Yr. 08/09	Yr. 09/10	Yr. 10/11	Yr. 11/12	Yr. 12/13	Total
Design/Studies		-	-	-	-	-	-	-	-	-	-	-
Land/R.O.W.	-	-	-	-	-	-	-	-	-	-	-	-
Construction		330,000	200,000	200,000	200,000	200,000	200,000	200,000	200,000	200,000	200,000	2,130,000
Equipment	-	-	-	-	-	-	-	-	-	-	-	-
Other Costs	-	-	-	-	-	-	-	-	-	-	-	-
Contingency Funds	-		-	-	-	-	-	-	-	-	-	-
Total	**$0**	**$330,000**	**$200,000**	**$200,000**	**$200,000**	**$200,000**	**$200,000**	**$200,000**	**$200,000**	**$200,000**	**$200,000**	**$2,130,000**
Funding Sources:	Prior Funding	Yr. 03/04	Yr. 04/05	Yr. 05/06	Yr. 06/07	Yr. 07/08	Yr. 08/09	Yr. 09/10	Yr. 10/11	Yr. 11/12	Yr. 12/13	Total
Operating Transfer	-	-	-	-	-	-	-	-	-	-	-	-
(Grants)	-	-	-	-	-	-	-	-	-	-	-	-
Revenue Bonds	130,000	200,000	200,000	200,000	200,000	200,000	200,000	200,000	200,000	200,000	200,000	2,130,000
Cert. of Obligation	-	-	-	-	-	-	-	-	-	-	-	-
G. O. Bonds	-	-	-	-	-	-	-	-	-	-	-	-
Other	-	-	-	-	-	-	-	-	-	-	-	-
Total	**$130,000**	**$200,000**	**$200,000**	**$200,000**	**$200,000**	**$200,000**	**$200,000**	**$200,000**	**$200,000**	**$200,000**	**$200,000**	**$2,130,000**

Description and Purpose

Replace mains identified through leak detection and maintenance records. As existing mains are identified as requiring replacement, these funds are available. This provides funding to quickly address problem mains, which improves customer service and reduces maintenance costs.

History and Current Status

Operating Budget Impact

Basis for Estimate	2002/03	2003/04	2004/05	2005/06	2006/07	2007/08	2008/09	2009/10	2010/11	2011/12

City of San Marcos
Fiscal Years 2003-2012
Capital Improvements Program Project Input Form

Project Name:	Post Road 8" Water Line Replacement					Project Category:		Water				
Department:	Engineering / W & WW Utilities					Project Manager:		Engineering				
Project Costs:	Prior Funding	Yr. 03/04	Yr. 04/05	Yr. 05/06	Yr. 06/07	Yr. 07/08	Yr. 08/09	Yr. 09/10	Yr. 10/11	Yr. 11/12	Yr. 12/13	Total
Design/Studies			-	-	-	-	-	-	-	-	-	-
Land/R.O.W.	-	50,000		-	-	-	-	-	-	-	-	50,000
Construction	-	280,000		-	-	-	-	-	-	-	-	280,000
Equipment	-	-		-	-	-	-	-	-	-	-	-
Other Costs	-	-		-	-	-	-	-	-	-	-	-
Contingency Funds	-	40,000		-	-	-	-	-	-	-	-	40,000
Total	**$0**	**$370,000**	**$0**	**$0**	**$0**	**$0**	**$0**	**$0**	**$0**	**$0**	**$0**	**$370,000**
Funding Sources:	Prior Funding	Yr. 03/04	Yr. 04/05	Yr. 05/06	Yr. 06/07	Yr. 07/08	Yr. 08/09	Yr. 09/10	Yr. 10/11	Yr. 11/12	Yr. 12/13	Total
Operating Transfer	-	-	-	-	-	-	-	-	-	-	-	-
(Grants)	-	-	-	-	-	-	-	-	-	-	-	-
Revenue Bonds	-	370,000	-	-	-	-	-	-	-	-	-	370,000
Cert. of Obligation	-	-	-	-	-	-	-	-	-	-	-	-
G. O. Bonds	-	-	-	-	-	-	-	-	-	-	-	-
Other	-	-	-	-	-	-	-	-	-	-	-	-
Total	**$0**	**$370,000**	**$0**	**$0**	**$0**	**$0**	**$0**	**$0**	**$0**	**$0**	**$0**	**$370,000**

Description and Purpose

Replace " AC water line in Post Road between Lime Kiln Road and north City Limits line with a new PVC water line. The existing AC water line in Post Road conflicts with street reconstruction and is a continuous mainteance problem. It is most efficient to replace this line with the reconstruction and widening of Post Road.

History and Current Status

Operating Budget Impact

Basis for Estimate	2002/03	2003/04	2004/05	2005/06	2006/07	2007/08	2008/09	2009/10	2010/11	2011/12

City of San Marcos
Fiscal Years 2003-2012
Capital Improvements Program Project Input Form

Project Name:	Lockwood-Del Sol Water Replacement					Project Category:		Water				
Department:	Engineering/ W & WW Utilities					Project Manager:		Engineering				
Project Costs:	Prior Funding	Yr. 03/04	Yr. 04/05	Yr. 05/06	Yr. 06/07	Yr. 07/08	Yr. 08/09	Yr. 09/10	Yr. 10/11	Yr. 11/12	Yr. 12/13	Total
Design/Studies		-	-	-	-	-		-	-	-	-	-
Land/R.O.W.	-	-	-	-	-	-		-	-	-	-	-
Construction		125,000										125,000
Equipment	-	-	-	-	-	-		-	-	-	-	-
Other Costs	-	-	-	-	-	-		-	-	-	-	-
Contingency Funds	-		-	-	-	-		-	-	-	-	-
Total		**$125,000**	**$0**	**$0**	**$0**	**$0**	**$0**	**$0**	**$0**	**$0**	**$0**	**$125,000**
Funding Sources:	Prior Funding	Yr. 03/04	Yr. 04/05	Yr. 05/06	Yr. 06/07	Yr. 07/08	Yr. 08/09	Yr. 09/10	Yr. 10/11	Yr. 11/12	Yr. 12/13	Total
Operating Transfer	-	-	-	-	-	-	-	-	-	-	-	-
CDBG	125,000		-	-	-	-	-	-	-	-	-	125,000
Revenue Bonds	-	-	-	-	-	-	-	-	-	-	-	-
Cert. of Obligation	-	-	-	-	-	-	-	-	-	-	-	-
G. O. Bonds	-	-	-	-	-	-	-	-	-	-	-	-
Other	-	-	-	-	-	-	-	-	-	-	-	-
Total	**$125,000**	**$0**	**$0**	**$0**	**$0**	**$0**	**$0**	**$0**	**$0**	**$0**	**$0**	**$125,000**

Description and Purpose

Replace & extend water lines in Del Sol and Lockwood to create a looped system and provide water service from the street versus the alley. This project was identified through citizen complaints and maintenance records. The project will be coordinated with the wastewater replacement project in the alley between Lockwood and Parkdale.

History and Current Status

The City Council authorized the use of CDBG funds for this construction on Feb. 10, 2003

Operating Budget Impact

Basis for Estimate	2002/03	2003/04	2004/05	2005/06	2006/07	2007/08	2008/09	2009/10	2010/11	2011/12

City of San Marcos
Fiscal Years 2003-2012
Capital Improvements Program Project Input Form

Project Name:	Water Distribution Improvements					Project Category:		Water				
Department:	W & WW Utilities					Project Manager:		W & WW Utilities				
Project Costs:	Prior Funding	Yr. 03/04	Yr. 04/05	Yr. 05/06	Yr. 06/07	Yr. 07/08	Yr. 08/09	Yr. 09/10	Yr. 10/11	Yr. 11/12	Yr. 12/13	Total
Design/Studies		-	-	-	-	-	-	-	-	-	-	-
Land/R.O.W.	-	-	-	-	-	-	-	-	-	-	-	-
Construction		124,494	150,000	150,000	150,000	150,000	150,000	150,000	150,000	150,000	150,000	1,474,494
Equipment	-	-	-	-	-	-	-	-	-	-	-	-
Other Costs	-	-	-	-	-	-	-	-	-	-	-	-
Contingency Funds	-		-	-	-	-	-	-	-	-	-	-
Total	**$0**	**$124,494**	**$150,000**	**$150,000**	**$150,000**	**$150,000**	**$150,000**	**$150,000**	**$150,000**	**$150,000**	**$150,000**	**$1,474,494**
Funding Sources:	Prior Funding	Yr. 03/04	Yr. 04/05	Yr. 05/06	Yr. 06/07	Yr. 07/08	Yr. 08/09	Yr. 09/10	Yr. 10/11	Yr. 11/12	Yr. 12/13	Total
Operating Transfer	-	-	-	-	-	-	-	-	-	-	-	-
(Grants)	-	-	-	-	-	-	-	-	-	-	-	-
Revenue Bonds	124,494	-	150,000	150,000	150,000	150,000	150,000	150,000	150,000	150,000	150,000	1,474,494
Cert. of Obligation	-	-	-	-	-	-	-	-	-	-	-	-
G. O. Bonds	-	-	-	-	-	-	-	-	-	-	-	-
Other	-	-	-	-	-	-	-	-	-	-	-	-
Total	**$124,494**	**$0**	**$150,000**	**$150,000**	**$150,000**	**$150,000**	**$150,000**	**$150,000**	**$150,000**	**$150,000**	**$150,000**	**$1,474,494**

Description and Purpose

Replace, repair and add water valves and fire hydrants throughout the water system. Funding may also be used for City construction of replacement water mains. As the water distribution system ages, water valves and fire hydrants begin to malfunction and leak. Valves and hydrants are a key element to the distribution system.

History and Current Status

The City has not had a plan for inspection/repair/replacement of valves and fire hydrants. This funding will allow such a plan to be developed and implemented.

Operating Budget Impact

Basis for Estimate	2002/03	2003/04	2004/05	2005/06	2006/07	2007/08	2008/09	2009/10	2010/11	2011/12

City of San Marcos
Fiscal Years 2003-2012
Capital Improvements Program Project Input Form

Project Name:	Water Pump Station Improvements					Project Category:		Water				
Department:	W & WW Utilities					Project Manager:		W & WW Utilities				
Project Costs:	Prior Funding	Yr. 03/04	Yr. 04/05	Yr. 05/06	Yr. 06/07	Yr. 07/08	Yr. 08/09	Yr. 09/10	Yr. 10/11	Yr. 11/12	Yr. 12/13	Total
Design/Studies		-	-	-	-	-	-	-	-	-	-	-
Land/R.O.W.	-	-	-	-	-	-	-	-	-	-	-	-
Construction		102,525	150,000	150,000	150,000	150,000	150,000	150,000	150,000	150,000	150,000	1,452,525
Equipment	-	-	-	-	-	-	-	-	-	-	-	-
Other Costs	-	-	-	-	-	-	-	-	-	-	-	-
Contingency Funds	-		-	-	-	-	-	-	-	-	-	-
Total	**$0**	**$102,525**	**$150,000**	**$150,000**	**$150,000**	**$150,000**	**$150,000**	**$150,000**	**$150,000**	**$150,000**	**$150,000**	**$1,452,525**
Funding Sources:	Prior Funding	Yr. 03/04	Yr. 04/05	Yr. 05/06	Yr. 06/07	Yr. 07/08	Yr. 08/09	Yr. 09/10	Yr. 10/11	Yr. 11/12	Yr. 12/13	Total
Operating Transfer	-	-	-	-	-	-	-	-	-	-	-	-
(Grants)	-	-	-	-	-	-	-	-	-	-	-	-
Revenue Bonds	102,525	-	150,000	150,000	150,000	150,000	150,000	150,000	150,000	150,000	150,000	1,452,525
Cert. of Obligation	-	-	-	-	-	-	-	-	-	-	-	-
G. O. Bonds	-	-	-	-	-	-	-	-	-	-	-	-
Other	-	-	-	-	-	-	-	-	-	-	-	-
Total	**$102,525**	**$0**	**$150,000**	**$150,000**	**$150,000**	**$150,000**	**$150,000**	**$150,000**	**$150,000**	**$150,000**	**$150,000**	**$1,452,525**

Description and Purpose

Funding will be used for systematic repair, replacement and upgrade of existing water pump stations, including pumps, flowmeters, valves, analyzers, motor control panels, motors, etc. The normal operation and maintenance budget only provides for day to day maintenance. This funding will allow for scheduled replacement and upgrading of equipment.

History and Current Status

Operating Budget Impact

Basis for Estimate	2002/03	2003/04	2004/05	2005/06	2006/07	2007/08	2008/09	2009/10	2010/11	2011/12

City of San Marcos
Fiscal Years 2003-2012
Capital Improvements Program Project Input Form

Project Name:	Water Well Improvements					Project Category:		Water				
Department:	W & WW Utilities					Project Manager:		W & WW Utilities				
Project Costs:	Prior Funding	Yr. 03/04	Yr. 04/05	Yr. 05/06	Yr. 06/07	Yr. 07/08	Yr. 08/09	Yr. 09/10	Yr. 10/11	Yr. 11/12	Yr. 12/13	Total
Design/Studies		-	-	-	-	-	-	-	-	-	-	-
Land/R.O.W.	-	-	-	-	-	-	-	-	-	-	-	-
Construction	-		50,000	50,000	360,000	-	-	-	-	-	-	460,000
Equipment	-	-	-	-	-	-	-	-	-	-	-	-
Other Costs	-	-	-	-	-	-	-	-	-	-	-	-
Contingency Funds	-		-	-	-	-	-	-	-	-	-	-
Total	**$0**	**$0**	**$50,000**	**$50,000**	**$360,000**	**$0**	**$0**	**$0**	**$0**	**$0**	**$0**	**$460,000**
Funding Sources:	Prior Funding	Yr. 03/04	Yr. 04/05	Yr. 05/06	Yr. 06/07	Yr. 07/08	Yr. 08/09	Yr. 09/10	Yr. 10/11	Yr. 11/12	Yr. 12/13	Total
Operating Transfer	-	-	-	-	-	-	-	-	-	-	-	-
(Grants)	-	-	-	-	-	-	-	-	-	-	-	-
Revenue Bonds	-	-	50,000	50,000	360,000	-	-	-	-	-	-	460,000
Cert. of Obligation	-	-	-	-	-	-	-	-	-	-	-	-
G. O. Bonds	-	-	-	-	-	-	-	-	-	-	-	-
Other	-	-	-	-	-	-	-	-	-	-	-	-
Total	**$0**	**$0**	**$50,000**	**$50,000**	**$360,000**	**$0**	**$0**	**$0**	**$0**	**$0**	**$0**	**$460,000**

Description and Purpose

Inspect and upgrade water well facilities to insure the integrity of water production. Construction scope may include casing of wells, and rehab of well piping systems.

History and Current Status

The City currently operates well facilities at 5 locations. As the City reduces its reliance on groundwater, these wells can be taken out of service for analysis of feasibility of improvements, or abandonment.

Operating Budget Impact

Basis for Estimate	2002/03	2003/04	2004/05	2005/06	2006/07	2007/08	2008/09	2009/10	2010/11	2011/12

City of San Marcos
Fiscal Years 2003-2012
Capital Improvements Program Project Input Form

Project Name:	Water Storage Tank Modifications					Project Category:		Water				
Department:	Engineering / W & WW Utilities					Project Manager:		Engineering				
Project Costs:	Prior Funding	Yr. 03/04	Yr. 04/05	Yr. 05/06	Yr. 06/07	Yr. 07/08	Yr. 08/09	Yr. 09/10	Yr. 10/11	Yr. 11/12	Yr. 12/13	Total
Design/Studies		-	-	20,000	-	-	-	-	-	-	-	20,000
Land/R.O.W.	-	-	-	50,000	-	-	-	-	-	-	-	50,000
Construction	-		-	-	200,000	-	-	-	-	-	-	200,000
Equipment	-	-	-	-	-	-	-	-	-	-	-	-
Other Costs	-	-	-	-	-	-	-	-	-	-	-	-
Contingency Funds	-		-	-	-	-	-	-	-	-	-	-
Total	**$0**	**$0**	**$0**	**$70,000**	**$200,000**	**$0**	**$0**	**$0**	**$0**	**$0**	**$0**	**$270,000**
Funding Sources:	Prior Funding	Yr. 03/04	Yr. 04/05	Yr. 05/06	Yr. 06/07	Yr. 07/08	Yr. 08/09	Yr. 09/10	Yr. 10/11	Yr. 11/12	Yr. 12/13	Total
Operating Transfer	-	-	-	-	-	-	-	-	-	-	-	-
(Grants)	-	-	-	-	-	-	-	-	-	-	-	-
Revenue Bonds	-	-	-	70,000	200,000	-	-	-	-	-	-	270,000
Cert. of Obligation	-	-	-	-	-	-	-	-	-	-	-	-
G. O. Bonds	-	-	-	-	-	-	-	-	-	-	-	-
Other	-	-	-	-	-	-	-	-	-	-	-	-
Total	**$0**	**$0**	**$0**	**$70,000**	**$200,000**	**$0**	**$0**	**$0**	**$0**	**$0**	**$0**	**$270,000**

Description and Purpose

Dismantle the Franklin and Midway storage tanks. These tanks are no longer functional in the water distribution system. There is a possibility these tanks can be used in other locations, and they may be moved as part of construction of new facilities in other parts of town. The Water Master Plan has identified Soyars and Trunk Hill as locations where new ground storage tanks are required.

History and Current Status

Operating Budget Impact

Basis for Estimate	2002/03	2003/04	2004/05	2005/06	2006/07	2007/08	2008/09	2009/10	2010/11	2011/12

City of San Marcos
Fiscal Years 2003-2012
Capital Improvements Program Project Input Form

Project Name:	Victory Gardens Water Improvements					Project Category:		Water				
Department:	Engineering/W & WW Utilities					Project Manager:		Engineering				
Project Costs:	Prior Funding	Yr. 03/04	Yr. 04/05	Yr. 05/06	Yr. 06/07	Yr. 07/08	Yr. 08/09	Yr. 09/10	Yr. 10/11	Yr. 11/12	Yr. 12/13	Total
Design/Studies	-	-	-	50,000	-	-	-	-	-	-	-	50,000
Land/R.O.W.	-	-	-	-	-	-	-	-	-	-	-	-
Construction	-	-	-	-	425,000	-	-	-	-	-	-	425,000
Equipment	-	-	-	-	-	-	-	-	-	-	-	-
Other Costs	-	-	-	-	-	-	-	-	-	-	-	-
Contingency Funds	-	-	-	-	70,000	-	-	-	-	-	-	70,000
Total	**$0**	**$0**	**$0**	**$50,000**	**$495,000**	**$0**	**$0**	**$0**	**$0**	**$0**	**$0**	**$545,000**
Funding Sources:	Prior Funding	Yr. 03/04	Yr. 04/05	Yr. 05/06	Yr. 06/07	Yr. 07/08	Yr. 08/09	Yr. 09/10	Yr. 10/11	Yr. 11/12	Yr. 12/13	Total
Operating Transfer	-	-	-	-	-	-	-	-	-	-	-	-
(Grants)	-	-	-	-	-	-	-	-	-	-	-	-
Revenue Bonds	-	-	-	50,000	495,000	-	-	-	-	-	-	545,000
Cert. of Obligation	-	-	-	-	-	-	-	-	-	-	-	-
G. O. Bonds	-	-	-	-	-	-	-	-	-	-	-	-
Other	-	-	-	-	-	-	-	-	-	-	-	-
Total	**$0**	**$0**	**$0**	**$50,000**	**$495,000**	**$0**	**$0**	**$0**	**$0**	**$0**	**$0**	**$545,000**

Description and Purpose

Replace approximately 8,450 linear feet of existing 2- and 6-inch water lines in this neighborhood. This project was identified in coordination with proposed wastewater and drainage improvements.

History and Current Status

Operating Budget Impact

Basis for Estimate	2002/03	2003/04	2004/05	2005/06	2006/07	2007/08	2008/09	2009/10	2010/11	2011/12

City of San Marcos
Fiscal Years 2003-2012
Capital Improvements Program Project Input Form

Project Name:	Railroad Water Line Encasements					Project Category:		Water				
Department:	Engineering / W & WW Utilities					Project Manager:		Engineering				
Project Costs:	Prior Funding	Yr. 03/04	Yr. 04/05	Yr. 05/06	Yr. 06/07	Yr. 07/08	Yr. 08/09	Yr. 09/10	Yr. 10/11	Yr. 11/12	Yr. 12/13	Total
Design/Studies		-	-	25,000	-	-	-	-	-	-	-	25,000
Land/R.O.W.	-		-	20,000	-	-	-	-	-	-	-	20,000
Construction			-	370,000	-	-	-	-	-	-	-	370,000
Equipment	-	-	-	-	-	-	-	-	-	-	-	-
Other Costs	-	-	-	-	-	-	-	-	-	-	-	-
Contingency Funds	-	-	-	23,900	-	-	-	-	-	-	-	23,900
Total	**$0**	**$0**	**$0**	**$438,900**	**$0**	**$0**	**$0**	**$0**	**$0**	**$0**	**$0**	**$438,900**
Funding Sources:	Prior Funding	Yr. 03/04	Yr. 04/05	Yr. 05/06	Yr. 06/07	Yr. 07/08	Yr. 08/09	Yr. 09/10	Yr. 10/11	Yr. 11/12	Yr. 12/13	Total
Operating Transfer	-	-	-	-	-	-	-	-	-	-	-	-
(Grants)	-	-	-	-	-	-	-	-	-	-	-	-
Revenue Bonds			-	438,900	-	-	-	-	-	-	-	438,900
Cert. of Obligation	-	-	-	-	-	-	-	-	-	-	-	-
G. O. Bonds	-	-	-	-	-	-	-	-	-	-	-	-
Other	-	-	-	-	-	-	-	-	-	-	-	-
Total	**$0**	**$0**	**$0**	**$438,900**	**$0**	**$0**	**$0**	**$0**	**$0**	**$0**	**$0**	**$438,900**

Description and Purpose

Encase water lines crossing Union Pacific Railroad Tracks at 9 locations. The railroad requires that all utilities crossing their right of way be encased. Currently there are 9 crossings within the City which are not encased. Encasing these lines will also make it easier to repair breaks should they occur, and reduce the risk of liability should one of these lines leak or break. Design of these crossing has been completed, however some engineering services will be required to separate the project into construction contracts. The project will also require paying a fee and obtaining a license from the Railroad for each crossing.

History and Current Status

Operating Budget Impact

Basis for Estimate	2002/03	2003/04	2004/05	2005/06	2006/07	2007/08	2008/09	2009/10	2010/11	2011/12

City of San Marcos
Fiscal Years 2003-2012
Capital Improvements Program Project Input Form

Project Name:	Staples Road 12-inch Water - Broadway to DeZavala					Project Category:		Water				
Department:	Engineering/ W & WW Utilities					Project Manager:		Engineering				
Project Costs:	Prior Funding	Yr. 03/04	Yr. 04/05	Yr. 05/06	Yr. 06/07	Yr. 07/08	Yr. 08/09	Yr. 09/10	Yr. 10/11	Yr. 11/12	Yr. 12/13	Total
Design/Studies		-	-	-	-	-	-	-	-	-	-	-
Land/R.O.W.	-	-	-	-	-	-	-	-	-	-	-	-
Construction					205,000							205,000
Equipment	-	-	-	-	-	-	-	-	-	-	-	-
Other Costs	-	-	-	-	-	-	-	-	-	-	-	-
Contingency Funds	-		-	-	-	-	-	-	-	-	-	-
Total		**$0**	**$0**	**$0**	**$205,000**	**$0**	**$0**	**$0**	**$0**	**$0**	**$0**	**$205,000**
Funding Sources:	Prior Funding	Yr. 03/04	Yr. 04/05	Yr. 05/06	Yr. 06/07	Yr. 07/08	Yr. 08/09	Yr. 09/10	Yr. 10/11	Yr. 11/12	Yr. 12/13	Total
Operating Transfer	-	-	-	-	-	-	-	-	-	-	-	-
(Grants)	-	-	-	-	-	-	-	-	-	-	-	-
Revenue Bonds	-	-	-	-	205,000	-	-	-	-	-	-	205,000
Cert. of Obligation	-	-	-	-	-	-	-	-	-	-	-	-
G. O. Bonds	-	-	-	-	-	-	-	-	-	-	-	-
Other	-	-	-	-	-	-	-	-	-	-	-	-
Total	**$0**	**$0**	**$0**	**$0**	**$205,000**	**$0**	**$0**	**$0**	**$0**	**$0**	**$0**	**$205,000**

Description and Purpose

Construct a 12" water line along Staples Road from Broadway to DeZavala (2033lf). This water line will connect two existing 12" water lines and complete what is now a gap. This project was identified by the Water Department.

History and Current Status

Operating Budget Impact

Basis for Estimate	2002/03	2003/04	2004/05	2005/06	2006/07	2007/08	2008/09	2009/10	2010/11	2011/12

City of San Marcos
Fiscal Years 2003-2012
Capital Improvements Program Project Input Form

Project Name:	Water Master Plan					Project Category:		Water				
Department:	Engineering/ W & WW Utilities					Project Manager:		Engineering				
Project Costs:	Prior Funding	Yr. 03/04	Yr. 04/05	Yr. 05/06	Yr. 06/07	Yr. 07/08	Yr. 08/09	Yr. 09/10	Yr. 10/11	Yr. 11/12	Yr. 12/13	Total
Design/Studies		-	-	-	-	450,000	-	-	-	-	500,000	950,000
Land/R.O.W.	-	-	-	-	-	-	-	-	-	-	-	-
Construction												-
Equipment	-	-	-	-	-	-	-	-	-	-	-	-
Other Costs	-	-	-	-	-	-	-	-	-	-	-	-
Contingency Funds	-		-	-	-	-	-	-	-	-	-	-
Total		**$0**	**$0**	**$0**	**$0**	**$450,000**	**$0**	**$0**	**$0**	**$0**	**$500,000**	**$950,000**
Funding Sources:	Prior Funding	Yr. 03/04	Yr. 04/05	Yr. 05/06	Yr. 06/07	Yr. 07/08	Yr. 08/09	Yr. 09/10	Yr. 10/11	Yr. 11/12	Yr. 12/13	Total
Operating Transfer	-	-	-	-	-	-	-	-	-	-	-	-
(Grants)	-	-	-	-	-	-	-	-	-	-	-	-
Revenue Bonds	-	-	-	-	-	450,000	-	-	-	-	500,000	950,000
Cert. of Obligation	-	-	-	-	-	-	-	-	-	-	-	-
G. O. Bonds	-	-	-	-	-	-	-	-	-	-	-	-
Other	-	-	-	-	-	-	-	-	-	-	-	-
Total	**$0**	**$0**	**$0**	**$0**	**$0**	**$450,000**	**$0**	**$0**	**$0**	**$0**	**$500,000**	**$950,000**

Description and Purpose

Update the City's Water Master Plan. This planning document guides the construction of water facilities to serve anticipated development. The latest Water Master Plan was completed in 2003.

History and Current Status

Operating Budget Impact

Basis for Estimate	2002/03	2003/04	2004/05	2005/06	2006/07	2007/08	2008/09	2009/10	2010/11	2011/12

City of San Marcos
Fiscal Years 2003-2012
Capital Improvements Program Project Input Form

Project Name:	Deerwood Estates- Sleepy Hollow Water Line Replacements					Project Category:		Water				
Department:	Engineering/ W & WW Utilities					Project Manager:		Engineering				
Project Costs:	Prior Funding	Yr. 03/04	Yr. 04/05	Yr. 05/06	Yr. 06/07	Yr. 07/08	Yr. 08/09	Yr. 09/10	Yr. 10/11	Yr. 11/12	Yr. 12/13	Total
Design/Studies		-	-	-	-	-	40,000	-	-	-	-	40,000
Land/R.O.W.	-	-	-	-	-	-	-	-	-	-	-	-
Construction							3,420,000					3,420,000
Equipment	-	-	-	-	-	-	-	-	-	-	-	-
Other Costs	-	-	-	-	-	-	-	-	-	-	-	-
Contingency Funds	-		-	-	-	-	40,000	-	-	-	-	40,000
Total		**$0**	**$0**	**$0**	**$0**	**$0**	**$3,500,000**	**$0**	**$0**	**$0**	**$0**	**$3,500,000**
Funding Sources:	Prior Funding	Yr. 03/04	Yr. 04/05	Yr. 05/06	Yr. 06/07	Yr. 07/08	Yr. 08/09	Yr. 09/10	Yr. 10/11	Yr. 11/12	Yr. 12/13	Total
Operating Transfer	-	-	-	-	-	-	-	-	-	-	-	-
(Grants)	-	-	-	-	-	-	-	-	-	-	-	-
Revenue Bonds	-	-	-	-	-	-	3,500,000	-	-	-	-	3,500,000
Cert. of Obligation	-	-	-	-	-	-	-	-	-	-	-	-
G. O. Bonds	-	-	-	-	-	-	-	-	-	-	-	-
Other	-	-	-	-	-	-	-	-	-	-	-	-
Total	**$0**	**$0**	**$0**	**$0**	**$0**	**$0**	**$3,500,000**	**$0**	**$0**	**$0**	**$0**	**$3,500,000**

Description and Purpose

Replace the existing 2, 3, 4 and 6" lines in Deerwood Estates and Sleepy Hollow with 8" mains. (40,900lf). This project was identified by the Water Department to upgrade mains in our service area to City standards.

History and Current Status

Operating Budget Impact

Basis for Estimate	2002/03	2003/04	2004/05	2005/06	2006/07	2007/08	2008/09	2009/10	2010/11	2011/12

City of San Marcos
Fiscal Years 2003-2012
Capital Improvements Program Project Input Form

Project Name:	Hwy 123 AC Replacement					Project Category:		Water				
Department:	Engineering/ W & WW Utilities					Project Manager:		Engineering				
Project Costs:	Prior Funding	Yr. 03/04	Yr. 04/05	Yr. 05/06	Yr. 06/07	Yr. 07/08	Yr. 08/09	Yr. 09/10	Yr. 10/11	Yr. 11/12	Yr. 12/13	Total
Design/Studies		-	-	-	-	-	60,000	-	-	-	-	60,000
Land/R.O.W.	-	-	-	-	-	-	-	-	-	-	-	-
Construction							800,000					800,000
Equipment	-	-	-	-	-	-	-	-	-	-	-	-
Other Costs	-	-	-	-	-	-	-	-	-	-	-	-
Contingency Funds	-		-	-	-	-	90,000	-	-	-	-	90,000
Total		**$0**	**$0**	**$0**	**$0**	**$0**	**$950,000**	**$0**	**$0**	**$0**	**$0**	**$950,000**
Funding Sources:	Prior Funding	Yr. 03/04	Yr. 04/05	Yr. 05/06	Yr. 06/07	Yr. 07/08	Yr. 08/09	Yr. 09/10	Yr. 10/11	Yr. 11/12	Yr. 12/13	Total
Operating Transfer	-	-	-	-	-	-	-	-	-	-	-	-
(Grants)	-	-	-	-	-	-	-	-	-	-	-	-
Revenue Bonds	-	-	-	-	-	-	950,000	-	-	-	-	950,000
Cert. of Obligation	-	-	-	-	-	-	-	-	-	-	-	-
G. O. Bonds	-	-	-	-	-	-	-	-	-	-	-	-
Other	-	-	-	-	-	-	-	-	-	-	-	-
Total	**$0**	**$0**	**$0**	**$0**	**$0**	**$0**	**$950,000**	**$0**	**$0**	**$0**	**$0**	**$950,000**

Description and Purpose

Replace the existing 12" AC line along Hwy 123 between Wonder World and IH 35. AC lines are difficult to repair, and this line is reaching the end of it's design life. This project was identified by the Water Department.

History and Current Status

Operating Budget Impact

Basis for Estimate	2002/03	2003/04	2004/05	2005/06	2006/07	2007/08	2008/09	2009/10	2010/11	2011/12

City of San Marcos
Fiscal Years 2003-2012
Capital Improvements Program Project Input Form

Project Name:	Red Sky Subdivision Water Line Replacement	Project Category:	Water
Department:	Engineering/ W & WW Utilities	Project Manager:	Engineering

Project Costs:	Prior Funding	Yr. 03/04	Yr. 04/05	Yr. 05/06	Yr. 06/07	Yr. 07/08	Yr. 08/09	Yr. 09/10	Yr. 10/11	Yr. 11/12	Yr. 12/13	Total
Design/Studies		-	-	-	-	-	40,000	-	-	-	-	40,000
Land/R.O.W.	-	-	-	-	-	-	-	-	-	-	-	-
Construction							450,000					450,000
Equipment	-	-	-	-	-	-	-	-	-	-	-	-
Other Costs	-	-	-	-	-	-	-	-	-	-	-	-
Contingency Funds	-		-	-	-	-	40,000	-	-	-	-	40,000
Total		**$0**	**$0**	**$0**	**$0**	**$0**	**$530,000**	**$0**	**$0**	**$0**	**$0**	**$530,000**
Funding Sources:	Prior Funding	Yr. 03/04	Yr. 04/05	Yr. 05/06	Yr. 06/07	Yr. 07/08	Yr. 08/09	Yr. 09/10	Yr. 10/11	Yr. 11/12	Yr. 12/13	Total
Operating Transfer	-	-	-	-	-	-	-	-	-	-	-	-
(Grants)	-	-	-	-	-	-	-	-	-	-	-	-
Revenue Bonds	-	-	-	-	-	-	530,000	-	-	-	-	530,000
Cert. of Obligation	-	-	-	-	-	-	-	-	-	-	-	-
G. O. Bonds	-	-	-	-	-	-	-	-	-	-	-	-
Other	-	-	-	-	-	-	-	-	-	-	-	-
Total	**$0**	**$0**	**$0**	**$0**	**$0**	**$0**	**$530,000**	**$0**	**$0**	**$0**	**$0**	**$530,000**

Description and Purpose

Replace the existing 2" mains in this subdivision with 8" mains (7800lf). This project was identified by the Water Department. This project will bring customers in our service area up to City standards

History and Current Status

Operating Budget Impact

Basis for Estimate	2002/03	2003/04	2004/05	2005/06	2006/07	2007/08	2008/09	2009/10	2010/11	2011/12

City of San Marcos
Fiscal Years 2003-2012
Capital Improvements Program Project Input Form

Project Name:	Wallace Addition Water Imp					Project Category:		Water				
Department:	Engineering/ W & WW Utilities					Project Manager:		Engineering				
Project Costs:	Prior Funding	Yr. 03/04	Yr. 04/05	Yr. 05/06	Yr. 06/07	Yr. 07/08	Yr. 08/09	Yr. 09/10	Yr. 10/11	Yr. 11/12	Yr. 12/13	Total
Design/Studies		-	-	-	-	-	75,000	-	-	-	-	75,000
Land/R.O.W.	-	-	-	-	-	-	20,000	-	-	-	-	20,000
Construction							645,000					645,000
Equipment	-	-	-	-	-	-	-	-	-	-	-	-
Other Costs	-	-	-	-	-	-	-	-	-	-	-	-
Contingency Funds	-		-	-	-	-	60,000	-	-	-	-	60,000
Total		**$0**	**$0**	**$0**	**$0**	**$0**	**$800,000**	**$0**	**$0**	**$0**	**$0**	**$800,000**
Funding Sources:	Prior Funding	Yr. 03/04	Yr. 04/05	Yr. 05/06	Yr. 06/07	Yr. 07/08	Yr. 08/09	Yr. 09/10	Yr. 10/11	Yr. 11/12	Yr. 12/13	Total
Operating Transfer	-	-	-	-	-	-	-	-	-	-	-	-
(Grants)	-	-	-	-	-	-	-	-	-	-	-	-
Revenue Bonds	-	-	-	-	-	-	800,000	-	-	-	-	800,000
Cert. of Obligation	-	-	-	-	-	-	-	-	-	-	-	-
G. O. Bonds	-	-	-	-	-	-	-	-	-	-	-	-
Other	-	-	-	-	-	-	-	-	-	-	-	-
Total	**$0**	**$0**	**$0**	**$0**	**$0**	**$0**	**$800,000**	**$0**	**$0**	**$0**	**$0**	**$800,000**

Description and Purpose

Replace the existing 2, 6 and 8" AC water lines in this neighborhood. This project was identified by the Water Department. The project will be coordinated with the proposed drainage improvements.

History and Current Status

Operating Budget Impact

Basis for Estimate	2002/03	2003/04	2004/05	2005/06	2006/07	2007/08	2008/09	2009/10	2010/11	2011/12

City of San Marcos
Fiscal Years 2003-2012
Capital Improvements Program Project Input Form

Project Name:	Dunbar Water Replacement					Project Category:		Water				
Department:	Engineering/ W & WW Utilities					Project Manager:		Engineering				
Project Costs:	Prior Funding	Yr. 03/04	Yr. 04/05	Yr. 05/06	Yr. 06/07	Yr. 07/08	Yr. 08/09	Yr. 09/10	Yr. 10/11	Yr. 11/12	Yr. 12/13	Total
Design/Studies		-	-	-	-	-	-	100,000	-	-	-	100,000
Land/R.O.W.	-	-	-	-	-	-	-	-	-	-	-	-
Construction							-	830,000				830,000
Equipment	-	-	-	-	-	-	-	-	-	-	-	-
Other Costs	-	-	-	-	-	-	-	-	-	-	-	-
Contingency Funds	-		-	-	-	-	-	70,000	-	-	-	70,000
Total		**$0**	**$0**	**$0**	**$0**	**$0**	**$0**	**$1,000,000**	**$0**	**$0**	**$0**	**$1,000,000**
Funding Sources:	Prior Funding	Yr. 03/04	Yr. 04/05	Yr. 05/06	Yr. 06/07	Yr. 07/08	Yr. 08/09	Yr. 09/10	Yr. 10/11	Yr. 11/12	Yr. 12/13	Total
Operating Transfer	-	-	-	-	-	-	-	-	-	-	-	-
(Grants)	-	-	-	-	-	-	-	-	-	-	-	-
Revenue Bonds	-	-	-	-	-	-	-	1,000,000	-	-	-	1,000,000
Cert. of Obligation	-	-	-	-	-	-	-	-	-	-	-	-
G. O. Bonds	-	-	-	-	-	-	-	-	-	-	-	-
Other	-	-	-	-	-	-	-	-	-	-	-	-
Total	**$0**	**$0**	**$0**	**$0**	**$0**	**$0**	**$0**	**$1,000,000**	**$0**	**$0**	**$0**	**$1,000,000**

Description and Purpose

Replace the existing 2" water lines on Johnson, Faris, Wilson, MLK, Meade, San Antonio and S. Mitchell Streets (11,400lf). These lines are old and need to be replaced with 8" lines. This project was identified by the Water Department. The water line replacements will be coordinated with the storm sewer improvements.

History and Current Status

Operating Budget Impact

Basis for Estimate	2002/03	2003/04	2004/05	2005/06	2006/07	2007/08	2008/09	2009/10	2010/11	2011/12

City of San Marcos
Fiscal Years 2003-2012
Capital Improvements Program Project Input Form

Project Name:	Green Haven & Briarwood Water Improvements					Project Category:		Water				
Department:	Engineering/ W & WW Utilities					Project Manager:		Engineering				
Project Costs:	Prior Funding	Yr. 03/04	Yr. 04/05	Yr. 05/06	Yr. 06/07	Yr. 07/08	Yr. 08/09	Yr. 09/10	Yr. 10/11	Yr. 11/12	Yr. 12/13	Total
Design/Studies		-	-	-	-	-	-	50,000	-	-	-	50,000
Land/R.O.W.	-	-	-	-	-	-	-	-	-	-	-	-
Construction							-	500,000				500,000
Equipment	-	-	-	-	-	-	-	-	-	-	-	-
Other Costs	-	-	-	-	-	-	-	-	-	-	-	-
Contingency Funds	-		-	-	-	-	-	50,000	-	-	-	50,000
Total		**$0**	**$0**	**$0**	**$0**	**$0**	**$0**	**$600,000**	**$0**	**$0**	**$0**	**$600,000**
Funding Sources:	Prior Funding	Yr. 03/04	Yr. 04/05	Yr. 05/06	Yr. 06/07	Yr. 07/08	Yr. 08/09	Yr. 09/10	Yr. 10/11	Yr. 11/12	Yr. 12/13	Total
Operating Transfer	-	-	-	-	-	-	-	-	-	-	-	-
(Grants)	-	-	-	-	-	-	-	-	-	-	-	-
Revenue Bonds	-	-	-	-	-	-	-	600,000	-	-	-	600,000
Cert. of Obligation	-	-	-	-	-	-	-	-	-	-	-	-
G. O. Bonds	-	-	-	-	-	-	-	-	-	-	-	-
Other	-	-	-	-	-	-	-	-	-	-	-	-
Total	**$0**	**$0**	**$0**	**$0**	**$0**	**$0**	**$0**	**$600,000**	**$0**	**$0**	**$0**	**$600,000**

Description and Purpose

Replace the existing 1 and 2" water lines in the Green Haven Subdivision and along Briarwood with 8" lines (6450lf). The existing lines are undersized and need to be brought up to City standards. This project was identified by the Water Department and this project will bring customers in our service area up to City standards

History and Current Status

Operating Budget Impact

Basis for Estimate	2002/03	2003/04	2004/05	2005/06	2006/07	2007/08	2008/09	2009/10	2010/11	2011/12

City of San Marcos
Fiscal Years 2003-2012
Capital Improvements Program Project Input Form

Project Name:	Southridge Estates Water Line Replacemei					Project Category:		Water				
Department:	Engineering/ W & WW Utilities					Project Manager:		Engineering				
Project Costs:	Prior Funding	Yr. 03/04	Yr. 04/05	Yr. 05/06	Yr. 06/07	Yr. 07/08	Yr. 08/09	Yr. 09/10	Yr. 10/11	Yr. 11/12	Yr. 12/13	Total
Design/Studies		-	-	-	-	-	-	-	200,000	-	-	200,000
Land/R.O.W.	-	-	-	-	-	-	-	-	200,000	-	-	200,000
Construction							-		1,500,000			1,500,000
Equipment	-	-	-	-	-	-	-	-	-	-	-	-
Other Costs	-	-	-	-	-	-	-	-	-	-	-	-
Contingency Funds	-		-	-	-	-	-	-	100,000	-	-	100,000
Total		**$0**	**$0**	**$0**	**$0**	**$0**	**$0**	**$0**	**$2,000,000**	**$0**	**$0**	**$2,000,000**
Funding Sources:	Prior Funding	Yr. 03/04	Yr. 04/05	Yr. 05/06	Yr. 06/07	Yr. 07/08	Yr. 08/09	Yr. 09/10	Yr. 10/11	Yr. 11/12	Yr. 12/13	Total
Operating Transfer	-	-	-	-	-	-	-	-	-	-	-	-
(Grants)	-	-	-	-	-	-	-	-	-	-	-	-
Revenue Bonds	-	-	-	-	-	-	-	-	2,000,000	-	-	2,000,000
Cert. of Obligation	-	-	-	-	-	-	-	-	-	-	-	-
G. O. Bonds	-	-	-	-	-	-	-	-	-	-	-	-
Other	-	-	-	-	-	-	-	-	-	-	-	-
Total	**$0**	**$0**	**$0**	**$0**	**$0**	**$0**	**$0**	**$0**	**$2,000,000**	**$0**	**$0**	**$2,000,000**

Description and Purpose

Replace the existing 2" water mains with 8" mains (23,650lf). The larger mains will provide the ability to provide fire protection and more suitable pressure to this area. This project will bring customers in our service area up to City standards and was identified by the Water Department.

History and Current Status

Operating Budget Impact

Basis for Estimate	2002/03	2003/04	2004/05	2005/06	2006/07	2007/08	2008/09	2009/10	2010/11	2011/12

City of San Marcos
Fiscal Years 2003-2012
Capital Improvements Program Project Input Form

Project Name:	IH 35 S 12-inch Water - Marshall to Wonder World					Project Category:		Water				
Department:	Engineering/ W & WW Utilities					Project Manager:		Engineering				
Project Costs:	Prior Funding	Yr. 03/04	Yr. 04/05	Yr. 05/06	Yr. 06/07	Yr. 07/08	Yr. 08/09	Yr. 09/10	Yr. 10/11	Yr. 11/12	Yr. 12/13	Total
Design/Studies		-	-	-	-	-		-	-	40,000	-	40,000
Land/R.O.W.	-	-	-	-	-	-		-	-	-	-	-
Construction										450,000		450,000
Equipment	-	-	-	-	-	-		-	-	-	-	-
Other Costs	-	-	-	-	-	-		-	-	-	-	-
Contingency Funds	-		-	-	-	-		-	-	40,000	-	40,000
Total		**$0**	**$0**	**$0**	**$0**	**$0**	**$0**	**$0**	**$0**	**$530,000**	**$0**	**$530,000**
Funding Sources:	Prior Funding	Yr. 03/04	Yr. 04/05	Yr. 05/06	Yr. 06/07	Yr. 07/08	Yr. 08/09	Yr. 09/10	Yr. 10/11	Yr. 11/12	Yr. 12/13	Total
Operating Transfer	-	-	-	-	-	-	-	-	-	-	-	-
(Grants)	-	-	-	-	-	-	-	-	-	-	-	-
Revenue Bonds	-	-	-	-	-	-	-	-	-	530,000	-	530,000
Cert. of Obligation	-	-	-	-	-	-	-	-	-	-	-	-
G. O. Bonds	-	-	-	-	-	-	-	-	-	-	-	-
Other	-	-	-	-	-	-	-	-	-	-	-	-
Total	**$0**	**$0**	**$0**	**$0**	**$0**	**$0**	**$0**	**$0**	**$0**	**$530,000**	**$0**	**$530,000**

Description and Purpose

Replace the existing 8" water main along the west side of IH-35 between Marshall Street and Wonder World Drive with a 12" line (5315lf). This project was identified by the Water Department.

History and Current Status

Operating Budget Impact

Basis for Estimate	2002/03	2003/04	2004/05	2005/06	2006/07	2007/08	2008/09	2009/10	2010/11	2011/12

City of San Marcos
Fiscal Years 2003-2012
Capital Improvements Program Project Input Form

Project Name:	McCarty Hunter 16-inch Water					Project Category:		Water				
Department:	Engineering/ W & WW Utilities					Project Manager:		Engineering				
Project Costs:	Prior Funding	Yr. 13/14	Yr. 14/15	Yr. 15/16	Yr. 16/17	Yr. 17/18	Yr. 18/19	Yr. 19/20	Yr. 20/21	Yr. 21/22	Yr. 22/23	Total
Design/Studies			-	-	-	-	-	-	-	-	-	-
Land/R.O.W.	-		-	-	-	-	-	-	-	-	-	-
Construction		1,300,000										1,300,000
Equipment	-	-	-	-	-	-	-	-	-	-	-	-
Other Costs	-	-	-	-	-	-	-	-	-	-	-	-
Contingency Funds	-	104,000		-	-	-	-	-	-	-	-	104,000
Total		**$1,404,000**	**$0**	**$0**	**$0**	**$0**	**$0**	**$0**	**$0**	**$0**	**$0**	**$1,404,000**
Funding Sources:	Prior Funding	Yr. 13/14	Yr. 14/15	Yr. 15/16	Yr. 16/17	Yr. 17/18	Yr. 18/19	Yr. 19/20	Yr. 20/21	Yr. 21/22	Yr. 22/23	Total
Operating Transfer	-	-	-	-	-	-	-	-	-	-	-	-
(Grants)	-	-	-	-	-	-	-	-	-	-	-	-
Revenue Bonds	-	-	1,404,000	-	-	-	-	-	-	-	-	1,404,000
Cert. of Obligation	-	-	-	-	-	-	-	-	-	-	-	-
G. O. Bonds	-	-	-	-	-	-	-	-	-	-	-	-
Other	-	-	-	-	-	-	-	-	-	-	-	-
Total	**$0**	**$0**	**$1,404,000**	**$0**	**$0**	**$0**	**$0**	**$0**	**$0**	**$0**	**$0**	**$1,404,000**

Description and Purpose

Construct a 12" water line from the McCarty tank, down McCarty Road and Hunter Road to Soyars (14,900lf). This pipeline would provide water from the McCarty Tank to the 826 pressure plane. It would also provide water to the booster pump at Soyars which would boost to the 936 pressure plane (to Trunk Hill). This system was recommended in the Water Master Plan.

History and Current Status

This project was identified in the Water Master Plan as project #101. It is anticipated that design of the project will be by Engineering Staff.

Operating Budget Impact

Basis for Estimate	2002/03	2003/04	2004/05	2005/06	2006/07	2007/08	2008/09	2009/10	2010/11	2011/12

City of San Marcos
Fiscal Years 2003-2012
Capital Improvements Program Project Input Form

Project Name:	Middle Plane Booster & Pipeline toTrunk Hi					Project Category:		Water				
Department:	Engineering/ W & WW Utilities					Project Manager:		Engineering				
Project Costs:	Prior Funding	Yr. 03/04	Yr. 04/05	Yr. 05/06	Yr. 06/07	Yr. 07/08	Yr. 08/09	Yr. 09/10	Yr. 10/11	Yr. 11/12	Yr. 12/13	Total
Design/Studies			-	91,000	-	-	-	-	-	-	-	91,000
Land/R.O.W.	-		-	-	-	-	-	-	-	-	-	-
Construction				1,000,000								1,000,000
Equipment	-	-	-	-	-	-	-	-	-	-	-	-
Other Costs	-	-	-	-	-	-	-	-	-	-	-	-
Contingency Funds	-			49,000	-	-	-	-	-	-	-	49,000
Total		**$0**	**$0**	**$1,140,000**	**$0**	**$0**	**$0**	**$0**	**$0**	**$0**	**$0**	**$1,140,000**
Funding Sources:	Prior Funding	Yr. 03/04	Yr. 04/05	Yr. 05/06	Yr. 06/07	Yr. 07/08	Yr. 08/09	Yr. 09/10	Yr. 10/11	Yr. 11/12	Yr. 12/13	Total
Operating Transfer	-	-	-	-	-	-	-	-	-	-	-	-
(Grants)	-	-	-	-	-	-	-	-	-	-	-	-
Revenue Bonds	-	-		-	-	-	-	-	-	-	-	-
Cert. of Obligation	-	-	-	-	-	-	-	-	-	-	-	-
G. O. Bonds	-	-	-	-	-	-	-	-	-	-	-	-
Other	-	-	-	-	-	-	-	-	-	-	-	-
Total	**$0**	**$0**	**$0**	**$0**	**$0**	**$0**	**$0**	**$0**	**$0**	**$0**	**$0**	**$0**

Description and Purpose

Construct a 12" water line between the Soyars booster pump station and the Oak Ridge ground storage tank to allow treated surface water to be conveyed to the Oak Ridge Pressure Planes. It will be constructed in the McCarty Lower Pressure Plane and will generally follow Hunter Road between Centerpoint Road and Quail Run, then head west along Quail Run to the Oak Ridge ground storage tank where a PRV and rate of flow control (RFC) valve will be installed.

History and Current Status

Operating Budget Impact

Basis for Estimate	2002/03	2003/04	2004/05	2005/06	2006/07	2007/08	2008/09	2009/10	2010/11	2011/12

City of San Marcos
Fiscal Years 2003-2012
Capital Improvements Program Project Input Form

Project Name:	Connection of Bishops Crossing to Lower Plain					Project Category:		Water				
Department:	Engineering/ W & WW Utilities					Project Manager:		Engineering				
Project Costs:	Prior Funding	Yr. 13/14	Yr. 14/15	Yr. 15/16	Yr. 16/17	Yr. 17/18	Yr. 18/19	Yr. 19/20	Yr. 20/21	Yr. 21/22	Yr. 22/23	Total
Design/Studies			-	40,000	-	-	-	-	-	-	-	40,000
Land/R.O.W.	-		-	-	-	-	-	-	-	-	-	-
Construction				160,000								160,000
Equipment	-	-	-	-	-	-	-	-	-	-	-	-
Other Costs	-	-	-	-	-	-	-	-	-	-	-	-
Contingency Funds	-			12,000	-	-	-	-	-	-	-	12,000
Total		**$0**	**$0**	**$212,000**	**$0**	**$0**	**$0**	**$0**	**$0**	**$0**	**$0**	**$212,000**
Funding Sources:	Prior Funding	Yr. 13/14	Yr. 14/15	Yr. 15/16	Yr. 16/17	Yr. 17/18	Yr. 18/19	Yr. 19/20	Yr. 20/21	Yr. 21/22	Yr. 22/23	Total
Operating Transfer	-	-	-	-	-	-	-	-	-	-	-	-
(Grants)	-	-	-	-	-	-	-	-	-	-	-	-
Revenue Bonds	-	-		-	-	-	-	-	-	-	-	-
Cert. of Obligation	-	-	-	-	-	-	-	-	-	-	-	-
G. O. Bonds	-	-	-	-	-	-	-	-	-	-	-	-
Other	-	-	-	-	-	-	-	-	-	-	-	-
Total	**$0**	**$0**	**$0**	**$0**	**$0**	**$0**	**$0**	**$0**	**$0**	**$0**	**$0**	**$0**

Description and Purpose

Construct a 12" water line to provide service from the SWTP Lower Pressure Plane to connections in the Bishop's Crossing neighborhood that are below 700' msl.

History and Current Status

Operating Budget Impact

Basis for Estimate	2002/03	2003/04	2004/05	2005/06	2006/07	2007/08	2008/09	2009/10	2010/11	2011/12

City of San Marcos
Fiscal Years 2003-2012
Capital Improvements Program Project Input Form

Project Name:	Wonder World Drive Water Relocation					Project Category:		Water				
Department:	Engineering/ W & WW Utilities					Project Manager:		Engineering				
Project Costs:	Prior Funding	Yr. 03/04	Yr. 04/05	Yr. 05/06	Yr. 06/07	Yr. 07/08	Yr. 08/09	Yr. 09/10	Yr. 10/11	Yr. 11/12	Yr. 12/13	Total
Design/Studies		-	-	-	-	-		-	-	-	-	-
Land/R.O.W.	-	-	-	-	-	-		-	-	-	-	-
Construction		450,528										450,528
Equipment	-	-	-	-	-	-		-	-	-	-	-
Other Costs	-	-	-	-	-	-		-	-	-	-	-
Contingency Funds	-		-	-	-	-		-	-	-	-	-
Total		**$450,528**	**$0**	**$0**	**$0**	**$0**		**$0**	**$0**	**$0**	**$0**	**$450,528**
Funding Sources:	Prior Funding	Yr. 03/04	Yr. 04/05	Yr. 05/06	Yr. 06/07	Yr. 07/08	Yr. 08/09	Yr. 09/10	Yr. 10/11	Yr. 11/12	Yr. 12/13	Total
Operating Transfer	-	-	-	-	-	-	-	-	-	-	-	-
(Grants)	-	-	-	-	-	-	-	-	-	-	-	-
Revenue Bonds	450,528	-	-	-	-	-	-	-	-	-	-	450,528
Cert. of Obligation	-	-	-	-	-	-	-	-	-	-	-	-
G. O. Bonds	-	-	-	-	-	-	-	-	-	-	-	-
Other	-	-	-	-	-	-	-	-	-	-	-	-
Total	**$450,528**	**$0**	**$0**	**$0**	**$0**	**$0**	**$0**	**$0**	**$0**	**$0**	**$0**	**$450,528**

Description and Purpose

Relocation of 16-inch water on Wonder World Drive between IH-35 and Stagecoach Road to avoid conflict with the construction of the railroad overpass. Based upon the results of the Water Master Plan, the line size will be increased to a 16-inch. Meets City Council goal to invest in the future through responsible infrastructure planning.

History and Current Status

Design of the project is underway.

Operating Budget Impact

Basis for Estimate	2002/03	2003/04	2004/05	2005/06	2006/07	2007/08	2008/09	2009/10	2010/11	2011/12

City of San Marcos
Fiscal Years 2003-2012
Capital Improvements Program Project Input Form

Project Name:	Wonder World 16-inch Water					Project Category:		Water				
Department:	Engineering/ W & WW Utilities					Project Manager:		Engineering				
Project Costs:	Prior Funding	Yr. 03/04	Yr. 04/05	Yr. 05/06	Yr. 06/07	Yr. 07/08	Yr. 08/09	Yr. 09/10	Yr. 10/11	Yr. 11/12	Yr. 12/13	Total
Design/Studies		-	-	-	150,000	-	-	-	-	-	-	150,000
Land/R.O.W.	-	-	-	-	50,000		-	-	-	-	-	50,000
Construction						1,200,000						1,200,000
Equipment	-	-	-	-	-	-	-	-	-	-	-	-
Other Costs	-	-	-	-	-	-	-	-	-	-	-	-
Contingency Funds	-		-	-	28,735	28,735	-	-	-	-	-	57,470
Total		**$0**	**$0**	**$0**	**$228,735**	**$1,228,735**	**$0**	**$0**	**$0**	**$0**	**$0**	**$1,457,470**
Funding Sources:	Prior Funding	Yr. 03/04	Yr. 04/05	Yr. 05/06	Yr. 06/07	Yr. 07/08	Yr. 08/09	Yr. 09/10	Yr. 10/11	Yr. 11/12	Yr. 12/13	Total
Operating Transfer	-	-	-	-	-	-	-	-	-	-	-	-
(Grants)	-	-	-	-	-	-	-	-	-	-	-	-
Revenue Bonds	-	-	-	-	228,735	1,228,737	-	-	-	-	-	1,457,472
Cert. of Obligation	-	-	-	-	-	-	-	-	-	-	-	-
G. O. Bonds	-	-	-	-	-	-	-	-	-	-	-	-
Other	-	-	-	-	-	-	-	-	-	-	-	-
Total	**$0**	**$0**	**$0**	**$0**	**$228,735**	**$1,228,737**	**$0**	**$0**	**$0**	**$0**	**$0**	**$1,457,472**

Description and Purpose

Replace existing 16-inch water line in Wonder World Drive from Hwy 123 to IH 35 with a 16-inch main. This facility was recommended in the Water Master Plan to increase distribution capacity in the southeast portion of the City and around the medical facilities.

History and Current Status

This project was identified in the Water Master Plan as project #104. The portion of project 104 between IH-35 and Stagecoach is a part of the Wonder World Utility Relocation.

Operating Budget Impact

Basis for Estimate	2002/03	2003/04	2004/05	2005/06	2006/07	2007/08	2008/09	2009/10	2010/11	2011/12

City of San Marcos
Fiscal Years 2003-2012
Capital Improvements Program Project Input Form

Project Name:	Sleepy Hollow Upper Pipe 1					Project Category:		Water				
Department:	Engineering/ W & WW Utilities					Project Manager:		Engineering				
Project Costs:	Prior Funding	Yr. 13/14	Yr. 14/15	Yr. 15/16	Yr. 16/17	Yr. 17/18	Yr. 18/19	Yr. 19/20	Yr. 20/21	Yr. 21/22	Yr. 22/23	Total
Design/Studies			-	65,000	-	-	-	-	-	-	-	65,000
Land/R.O.W.	-		-	-	-	-	-	-	-	-	-	-
Construction				335,000								335,000
Equipment	-	-	-	-	-	-	-	-	-	-	-	-
Other Costs	-	-	-	-	-	-	-	-	-	-	-	-
Contingency Funds	-			30,000	-	-	-	-	-	-	-	30,000
Total		**$0**	**$0**	**$430,000**	**$0**	**$0**	**$0**	**$0**	**$0**	**$0**	**$0**	**$430,000**
Funding Sources:	Prior Funding	Yr. 13/14	Yr. 14/15	Yr. 15/16	Yr. 16/17	Yr. 17/18	Yr. 18/19	Yr. 19/20	Yr. 20/21	Yr. 21/22	Yr. 22/23	Total
Operating Transfer	-	-	-	-	-	-	-	-	-	-	-	-
(Grants)	-	-	-	-	-	-	-	-	-	-	-	-
Revenue Bonds	-	-		-	-	-	-	-	-	-	-	-
Cert. of Obligation	-	-	-	-	-	-	-	-	-	-	-	-
G. O. Bonds	-	-	-	-	-	-	-	-	-	-	-	-
Other	-	-	-	-	-	-	-	-	-	-	-	-
Total	**$0**	**$0**	**$0**	**$0**	**$0**	**$0**	**$0**	**$0**	**$0**	**$0**	**$0**	**$0**

Description and Purpose

Construct a 8" water line to connect the Trunk Hill Tank to the Sleepy Hollow Pressure Plane.

History and Current Status

Operating Budget Impact

Basis for Estimate	2002/03	2003/04	2004/05	2005/06	2006/07	2007/08	2008/09	2009/10	2010/11	2011/12

City of San Marcos
Fiscal Years 2003-2012
Capital Improvements Program Project Input Form

Project Name:	Center Point Rd - Hunter to IH 35					Project Category:		Water				
Department:	Engineering/ W & WW Utilities					Project Manager:		Engineering				
Project Costs:	Prior Funding	Yr. 13/14	Yr. 14/15	Yr. 15/16	Yr. 16/17	Yr. 17/18	Yr. 18/19	Yr. 19/20	Yr. 20/21	Yr. 21/22	Yr. 22/23	Total
Design/Studies			-	110,000	-	-	-	-	-	-	-	110,000
Land/R.O.W.	-		-	-	-	-	-	-	-	-	-	-
Construction				580,000								580,000
Equipment	-	-	-	-	-	-	-	-	-	-	-	-
Other Costs	-	-	-	-	-	-	-	-	-	-	-	-
Contingency Funds	-			53,000	-	-	-	-	-	-	-	53,000
Total		**$0**	**$0**	**$743,000**	**$0**	**$0**	**$0**	**$0**	**$0**	**$0**	**$0**	**$743,000**
Funding Sources:	Prior Funding	Yr. 13/14	Yr. 14/15	Yr. 15/16	Yr. 16/17	Yr. 17/18	Yr. 18/19	Yr. 19/20	Yr. 20/21	Yr. 21/22	Yr. 22/23	Total
Operating Transfer	-	-	-	-	-	-	-	-	-	-	-	-
(Grants)	-	-	-	-	-	-	-	-	-	-	-	-
Revenue Bonds	-	-		-	-	-	-	-	-	-	-	-
Cert. of Obligation	-	-	-	-	-	-	-	-	-	-	-	-
G. O. Bonds	-	-	-	-	-	-	-	-	-	-	-	-
Other	-	-	-	-	-	-	-	-	-	-	-	-
Total	**$0**	**$0**	**$0**	**$0**	**$0**	**$0**	**$0**	**$0**	**$0**	**$0**	**$0**	**$0**

Description and Purpose

Continuation of project 23. Construct a 1 mile 24" waterline from the termination of project 23 along Centerpoint Rd to the intersection of Hunter Road.

History and Current Status

Operating Budget Impact

Basis for Estimate	2002/03	2003/04	2004/05	2005/06	2006/07	2007/08	2008/09	2009/10	2010/11	2011/12

City of San Marcos
Fiscal Years 2003-2012
Capital Improvements Program Project Input Form

Project Name:	McCarty Rd to San Marcos Estates					Project Category:		Water				
Department:	Engineering/ W & WW Utilities					Project Manager:		Engineering				
Project Costs:	Prior Funding	Yr. 13/14	Yr. 14/15	Yr. 15/16	Yr. 16/17	Yr. 17/18	Yr. 18/19	Yr. 19/20	Yr. 20/21	Yr. 21/22	Yr. 22/23	Total
Design/Studies		40,000	-		-	-	-	-	-	-	-	40,000
Land/R.O.W.	-		-	-	-	-	-	-	-	-	-	-
Construction		230,000										230,000
Equipment	-	-	-	-	-	-	-	-	-	-	-	-
Other Costs	-	-	-	-	-	-	-	-	-	-	-	-
Contingency Funds	-	23,000			-	-	-	-	-	-	-	23,000
Total		**$293,000**	**$0**	**$0**	**$0**	**$0**	**$0**	**$0**	**$0**	**$0**	**$0**	**$293,000**
Funding Sources:	Prior Funding	Yr. 13/14	Yr. 14/15	Yr. 15/16	Yr. 16/17	Yr. 17/18	Yr. 18/19	Yr. 19/20	Yr. 20/21	Yr. 21/22	Yr. 22/23	Total
Operating Transfer	-	-	-	-	-	-	-	-	-	-	-	-
(Grants)	-	-	-	-	-	-	-	-	-	-	-	-
Revenue Bonds	-	-		-	-	-	-	-	-	-	-	-
Cert. of Obligation	-	-	-	-	-	-	-	-	-	-	-	-
G. O. Bonds	-	-	-	-	-	-	-	-	-	-	-	-
Other	-	-	-	-	-	-	-	-	-	-	-	-
Total	**$0**	**$0**	**$0**	**$0**	**$0**	**$0**	**$0**	**$0**	**$0**	**$0**	**$0**	**$0**

Description and Purpose

Construct a 12" waterline from the McCarty to Soyars Transmission Pipeline to areas of new development in the western part of the service area.

History and Current Status

Operating Budget Impact

Basis for Estimate	2002/03	2003/04	2004/05	2005/06	2006/07	2007/08	2008/09	2009/10	2010/11	2011/12

City of San Marcos
Fiscal Years 2003-2012
Capital Improvements Program Project Input Form

Project Name:	Railroad Water Line					Project Category:		Water				
Department:	Engineering/ W & WW Utilities					Project Manager:		Engineering				
Project Costs:	Prior Funding	Yr. 13/14	Yr. 14/15	Yr. 15/16	Yr. 16/17	Yr. 17/18	Yr. 18/19	Yr. 19/20	Yr. 20/21	Yr. 21/22	Yr. 22/23	Total
Design/Studies			-	65,000	-	-	-	-	-	-	-	65,000
Land/R.O.W.	-		-	-	-	-	-	-	-	-	-	-
Construction				375,000								375,000
Equipment	-	-	-	-	-	-	-	-	-	-	-	-
Other Costs	-	-	-	-	-	-	-	-	-	-	-	-
Contingency Funds	-			35,000	-	-	-	-	-	-	-	35,000
Total		**$0**	**$0**	**$475,000**	**$0**	**$0**	**$0**	**$0**	**$0**	**$0**	**$0**	**$475,000**
Funding Sources:	Prior Funding	Yr. 13/14	Yr. 14/15	Yr. 15/16	Yr. 16/17	Yr. 17/18	Yr. 18/19	Yr. 19/20	Yr. 20/21	Yr. 21/22	Yr. 22/23	Total
Operating Transfer	-	-	-	-	-	-	-	-	-	-	-	-
(Grants)	-	-	-	-	-	-	-	-	-	-	-	-
Revenue Bonds	-	-		-	-	-	-	-	-	-	-	-
Cert. of Obligation	-	-	-	-	-	-	-	-	-	-	-	-
G. O. Bonds	-	-	-	-	-	-	-	-	-	-	-	-
Other	-	-	-	-	-	-	-	-	-	-	-	-
Total	**$0**	**$0**	**$0**	**$0**	**$0**	**$0**	**$0**	**$0**	**$0**	**$0**	**$0**	**$0**

Description and Purpose

Construct a 12" waterline parrallel to the railroad tracks from McCarty Road to the 16" cross-countrywaterline between Hunter Road and IH-35.

History and Current Status

Operating Budget Impact

Basis for Estimate	2002/03	2003/04	2004/05	2005/06	2006/07	2007/08	2008/09	2009/10	2010/11	2011/12

City of San Marcos
Fiscal Years 2003-2012
Capital Improvements Program Project Input Form

Project Name:	SWTP 9.0 MGD Re-rating	Project Category:	Water
Department:	Engineering/ W & WW Utilities	Project Manager:	Engineering

Project Costs:	Prior Funding	Yr. 03/04	Yr. 04/05	Yr. 05/06	Yr. 06/07	Yr. 07/08	Yr. 08/09	Yr. 09/10	Yr. 10/11	Yr. 11/12	Yr. 12/13	Total
Design/Studies		150,000	-	-	-	-		-	-	-	-	150,000
Land/R.O.W.	-	-	-	-	-	-		-	-	-	-	-
Construction		450,000										450,000
Equipment	-	-	-	-	-	-		-	-	-	-	-
Other Costs	-	-	-	-	-	-		-	-	-	-	-
Contingency Funds	-		-	-	-	-		-	-	-	-	-
Total		**$600,000**	**$0**	**$0**	**$0**	**$0**		**$0**	**$0**	**$0**	**$0**	**$600,000**

Funding Sources:	Prior Funding	Yr. 03/04	Yr. 04/05	Yr. 05/06	Yr. 06/07	Yr. 07/08	Yr. 08/09	Yr. 09/10	Yr. 10/11	Yr. 11/12	Yr. 12/13	Total
Operating Transfer	-	-	-	-	-	-	-	-	-	-	-	-
(Grants)	-	-	-	-	-	-	-	-	-	-	-	-
Revenue Bonds	-	-	-	-	-	-	-	-	-	-	-	-
Cert. of Obligation	-	-	-	-	-	-	-	-	-	-	-	-
G. O. Bonds	-	-	-	-	-	-	-	-	-	-	-	-
Impact Fees	600,000	-	-	-	-	-	-	-	-	-	-	600,000
Total	**$600,000**	**$0**	**$0**	**$0**	**$0**	**$0**	**$0**	**$0**	**$0**	**$0**	**$0**	**$600,000**

Description and Purpose

Construct improvements to Surface Water Treatment Plant to increase capacity to 9.0 million gallons per day (MGD). Improvements will include additional high service pumping capacity with variable frequnecy drives, instrumentation, maodifing the disinfection process and chemical feed systems. The construction will provide an additional 3 MGD of capacity at a minimal cost.

History and Current Status

Design of the project is underway .

Operating Budget Impact

Basis for Estimate	2002/03	2003/04	2004/05	2005/06	2006/07	2007/08	2008/09	2009/10	2010/11	2011/12

City of San Marcos
Fiscal Years 2003-2012
Capital Improvements Program Project Input Form

Project Name:	SWTP Expansion to 18.0 MGD					Project Category:		Water				
Department:	Engineering/ W & WW Utilities					Project Manager:		Engineering				
Project Costs:	Prior Funding	Yr. 03/04	Yr. 04/05	Yr. 05/06	Yr. 06/07	Yr. 07/08	Yr. 08/09	Yr. 09/10	Yr. 10/11	Yr. 11/12	Yr. 12/13	Total
Design/Studies		-	-	-	500,000		-	-	-	-	-	500,000
Land/R.O.W.	-	-	-	-	-	-	-	-	-	-	-	-
Construction						7,500,000						7,500,000
Equipment	-	-	-	-	-	-	-	-	-	-	-	-
Other Costs	-	-	-	-	-	-	-	-	-	-	-	-
Contingency Funds	-		-	-	-	500,000	-	-	-	-	-	500,000
Total		**$0**	**$0**	**$0**	**$500,000**	**$8,000,000**	**$0**	**$0**	**$0**	**$0**	**$0**	**$8,500,000**
Funding Sources:	Prior Funding	Yr. 03/04	Yr. 04/05	Yr. 05/06	Yr. 06/07	Yr. 07/08	Yr. 08/09	Yr. 09/10	Yr. 10/11	Yr. 11/12	Yr. 12/13	Total
Operating Transfer	-	-	-	-	-	-	-	-	-	-	-	-
(Grants)	-	-	-	-	-	-	-	-	-	-	-	-
Revenue Bonds	-	-	-	-	500,000	8,000,000	-	-	-	-	-	8,500,000
Cert. of Obligation	-	-	-	-	-	-	-	-	-	-	-	-
G. O. Bonds	-	-	-	-	-	-	-	-	-	-	-	-
Other	-	-	-	-	-	-	-	-	-	-	-	-
Total	**$0**	**$0**	**$0**	**$0**	**$500,000**	**$8,000,000**	**$0**	**$0**	**$0**	**$0**	**$0**	**$8,500,000**

Description and Purpose

Expand the production capacity of the Surface Water Treatment Plant by 9 million gallons. Population projections indicate that additional capacity in the SWTP will be required in the year 2008.

History and Current Status

This project was identified in the Water Master Plan as project #111. This project was also included in the impact fee calculation and funding from impact fees can be used if available.

Operating Budget Impact

Basis for Estimate	2002/03	2003/04	2004/05	2005/06	2006/07	2007/08	2008/09	2009/10	2010/11	2011/12

City of San Marcos
Fiscal Years 2003-2012
Capital Improvements Program Project Input Form

Project Name:	2nd 9 MGD Plant Train					Project Category:		Water				
Department:	Engineering/ W & WW Utilities					Project Manager:		Engineering				
Project Costs:	Prior Funding	Yr. 13/14	Yr. 14/15	Yr. 15/16	Yr. 16/17	Yr. 17/18	Yr. 18/19	Yr. 19/20	Yr. 20/21	Yr. 21/22	Yr. 22/23	Total
Design/Studies			-		-	-	-	-	-	750,000	-	750,000
Land/R.O.W.	-		-	-	-	-	-	-	-	-	-	-
Construction											8,500,000	8,500,000
Equipment	-	-	-	-	-	-	-	-	-	-	-	-
Other Costs	-	-	-	-	-	-	-	-	-	-	-	-
Contingency Funds	-				-	-	-	-	-	-	750,000	750,000
Total		**$0**	**$0**	**$0**	**$0**	**$0**	**$0**	**$0**	**$0**	**$750,000**	**$9,250,000**	**$10,000,000**
Funding Sources:	Prior Funding	Yr. 13/14	Yr. 14/15	Yr. 15/16	Yr. 16/17	Yr. 17/18	Yr. 18/19	Yr. 19/20	Yr. 20/21	Yr. 21/22	Yr. 22/23	Total
Operating Transfer	-	-	-	-	-	-	-	-	-	-	-	-
(Grants)	-	-	-	-	-	-	-	-	-	-	-	-
Revenue Bonds	-	-		-	-	-	-	-	-	-	-	-
Cert. of Obligation	-	-	-	-	-	-	-	-	-	-	-	-
G. O. Bonds	-	-	-	-	-	-	-	-	-	-	-	-
Other	-	-	-	-	-	-	-	-	-	-	-	-
Total	**$0**	**$0**	**$0**	**$0**	**$0**	**$0**	**$0**	**$0**	**$0**	**$0**	**$0**	**$0**

Description and Purpose

Expand the production capacity of the Surface Water Treatment Plant by 9 million gallons. Population projections indicate that additional capacity in the SWTP will be required in the year 2023.

History and Current Status

Operating Budget Impact

Basis for Estimate	2002/03	2003/04	2004/05	2005/06	2006/07	2007/08	2008/09	2009/10	2010/11	2011/12

City of San Marcos
Fiscal Years 2003-2012
Capital Improvements Program Project Input Form

Project Name:	Soyars to 936 Plane (Pump replacement only)					Project Category:		Water				
Department:	Engineering/ W & WW Utilities					Project Manager:		Engineering				
Project Costs:	Prior Funding	Yr. 13/14	Yr. 14/15	Yr. 15/16	Yr. 16/17	Yr. 17/18	Yr. 18/19	Yr. 19/20	Yr. 20/21	Yr. 21/22	Yr. 22/23	Total
Design/Studies			-	15,000	-	-	-	-	-	-	-	15,000
Land/R.O.W.	-		-	-	-	-	-	-	-	-	-	-
Construction				125,000								125,000
Equipment	-	-	-	-	-	-	-	-	-	-	-	-
Other Costs	-	-	-	-	-	-	-	-	-	-	-	-
Contingency Funds	-			10,000	-	-	-	-	-	-	-	10,000
Total		**$0**	**$0**	**$150,000**	**$0**	**$0**	**$0**	**$0**	**$0**	**$0**	**$0**	**$150,000**
Funding Sources:	Prior Funding	Yr. 13/14	Yr. 14/15	Yr. 15/16	Yr. 16/17	Yr. 17/18	Yr. 18/19	Yr. 19/20	Yr. 20/21	Yr. 21/22	Yr. 22/23	Total
Operating Transfer	-	-	-	-	-	-	-	-	-	-	-	-
(Grants)	-	-	-	-	-	-	-	-	-	-	-	-
Revenue Bonds	-	-		-	-	-	-	-	-	-	-	-
Cert. of Obligation	-	-	-	-	-	-	-	-	-	-	-	-
G. O. Bonds	-	-	-	-	-	-	-	-	-	-	-	-
Other	-	-	-	-	-	-	-	-	-	-	-	-
Total	**$0**	**$0**	**$0**	**$0**	**$0**	**$0**	**$0**	**$0**	**$0**	**$0**	**$0**	**$0**

Description and Purpose

Modify existing pump station to boost from the 810' msl plane to the 936' msl plane. Modify caapacity to 1100 gpm at 155' TDH.

History and Current Status

Operating Budget Impact

Basis for Estimate	2002/03	2003/04	2004/05	2005/06	2006/07	2007/08	2008/09	2009/10	2010/11	2011/12

City of San Marcos
Fiscal Years 2003-2012
Capital Improvements Program Project Input Form

Project Name:	Modify McCarty to 936 Plane					Project Category:		Water				
Department:	Engineering/ W & WW Utilities					Project Manager:		Engineering				
Project Costs:	Prior Funding	Yr. 13/14	Yr. 14/15	Yr. 15/16	Yr. 16/17	Yr. 17/18	Yr. 18/19	Yr. 19/20	Yr. 20/21	Yr. 21/22	Yr. 22/23	Total
Design/Studies			-	70,000	-	-	-	-	-	-	-	70,000
Land/R.O.W.	-		-	-	-	-	-	-	-	-	-	-
Construction				503,000								503,000
Equipment	-	-	-	-	-	-	-	-	-	-	-	-
Other Costs	-	-	-	-	-	-	-	-	-	-	-	-
Contingency Funds	-			40,000	-	-	-	-	-	-	-	40,000
Total		**$0**	**$0**	**$613,000**	**$0**	**$0**	**$0**	**$0**	**$0**	**$0**	**$0**	**$613,000**
Funding Sources:	Prior Funding	Yr. 13/14	Yr. 14/15	Yr. 15/16	Yr. 16/17	Yr. 17/18	Yr. 18/19	Yr. 19/20	Yr. 20/21	Yr. 21/22	Yr. 22/23	Total
Operating Transfer	-	-	-	-	-	-	-	-	-	-	-	-
(Grants)	-	-	-	-	-	-	-	-	-	-	-	-
Revenue Bonds	-	-		-	-	-	-	-	-	-	-	-
Cert. of Obligation	-	-	-	-	-	-	-	-	-	-	-	-
G. O. Bonds	-	-	-	-	-	-	-	-	-	-	-	-
Other	-	-	-	-	-	-	-	-	-	-	-	-
Total	**$0**	**$0**	**$0**	**$0**	**$0**	**$0**	**$0**	**$0**	**$0**	**$0**	**$0**	**$0**

Description and Purpose

Modify existing pump station to boost from the 810' msl plane to the 936' msl plane. Modify caapacity to 2000 gpm at 155' TDH.

History and Current Status

Operating Budget Impact

Basis for Estimate	2002/03	2003/04	2004/05	2005/06	2006/07	2007/08	2008/09	2009/10	2010/11	2011/12

City of San Marcos
Fiscal Years 2003-2012
Capital Improvements Program Project Input Form

Project Name:	936-1020 North (middle-high) Pump Station					Project Category:		Water				
Department:	Engineering/ W & WW Utilities					Project Manager:		Engineering				
Project Costs:	Prior Funding	Yr. 23/24	Yr. 24/25	Yr. 25/26	Yr. 26/27	Yr. 27/28	Yr. 28/29	Yr. 29/30	Yr. 30/31	Yr. 31/32	Yr. 32/33	Total
Design/Studies			-	40,000	-	-	-	-	-	-	-	40,000
Land/R.O.W.	-		-	-	-	-	-	-	-	-	-	-
Construction				180,000								180,000
Equipment	-	-	-	-	-	-	-	-	-	-	-	-
Other Costs	-	-	-	-	-	-	-	-	-	-	-	-
Contingency Funds	-			13,000	-	-	-	-	-	-	-	13,000
Total		**$0**	**$0**	**$233,000**	**$0**	**$0**	**$0**	**$0**	**$0**	**$0**	**$0**	**$233,000**
Funding Sources:	Prior Funding	Yr. 23/24	Yr. 24/25	Yr. 25/26	Yr. 26/27	Yr. 27/28	Yr. 28/29	Yr. 29/30	Yr. 30/31	Yr. 31/32	Yr. 32/33	Total
Operating Transfer	-	-	-	-	-	-	-	-	-	-	-	-
(Grants)	-	-	-	-	-	-	-	-	-	-	-	-
Revenue Bonds	-	-		-	-	-	-	-	-	-	-	-
Cert. of Obligation	-	-	-	-	-	-	-	-	-	-	-	-
G. O. Bonds	-	-	-	-	-	-	-	-	-	-	-	-
Other	-	-	-	-	-	-	-	-	-	-	-	-
Total	**$0**	**$0**	**$0**	**$0**	**$0**	**$0**	**$0**	**$0**	**$0**	**$0**	**$0**	**$0**

Description and Purpose

Proposed 700 gpm at 100' TDH pump station. Constructe to serve the western edge of the service area as development occurs along Ranch Road 12. The pressure plane would operate on the same grade as Sleepy Hollow, 1,005' msl.

History and Current Status

Operating Budget Impact

Basis for Estimate	2002/03	2003/04	2004/05	2005/06	2006/07	2007/08	2008/09	2009/10	2010/11	2011/12

City of San Marcos
Fiscal Years 2003-2012
Capital Improvements Program Project Input Form

Project Name:	Sleepy Hollow 936 to 1,005 Plane					Project Category:		Water				
Department:	Engineering/ W & WW Utilities					Project Manager:		Engineering				
Project Costs:	Prior Funding	Yr. 13/14	Yr. 14/15	Yr. 15/16	Yr. 16/17	Yr. 17/18	Yr. 18/19	Yr. 19/20	Yr. 20/21	Yr. 21/22	Yr. 22/23	Total
Design/Studies			-	15,000	-	-	-	-	-	-	-	15,000
Land/R.O.W.	-		-	-	-	-	-	-	-	-	-	-
Construction				115,000								115,000
Equipment	-	-	-	-	-	-	-	-	-	-	-	-
Other Costs	-	-	-	-	-	-	-	-	-	-	-	-
Contingency Funds	-			8,000	-	-	-	-	-	-	-	8,000
Total		**$0**	**$0**	**$138,000**	**$0**	**$0**	**$0**	**$0**	**$0**	**$0**	**$0**	**$138,000**
Funding Sources:	Prior Funding	Yr. 13/14	Yr. 14/15	Yr. 15/16	Yr. 16/17	Yr. 17/18	Yr. 18/19	Yr. 19/20	Yr. 20/21	Yr. 21/22	Yr. 22/23	Total
Operating Transfer	-	-	-	-	-	-	-	-	-	-	-	-
(Grants)	-	-	-	-	-	-	-	-	-	-	-	-
Revenue Bonds	-	-		-	-	-	-	-	-	-	-	-
Cert. of Obligation	-	-	-	-	-	-	-	-	-	-	-	-
G. O. Bonds	-	-	-	-	-	-	-	-	-	-	-	-
Other	-	-	-	-	-	-	-	-	-	-	-	-
Total	**$0**	**$0**	**$0**	**$0**	**$0**	**$0**	**$0**	**$0**	**$0**	**$0**	**$0**	**$0**

Description and Purpose

Proposed 350 gpm at 100' TDH pump station. Will draw water from the SWTP Upper Pressure Plane, 936' msl, and lift to the 1,005' msl Sleepy Hollow Pressure Plane.

History and Current Status

Operating Budget Impact

Basis for Estimate	2002/03	2003/04	2004/05	2005/06	2006/07	2007/08	2008/09	2009/10	2010/11	2011/12

City of San Marcos
Fiscal Years 2003-2012
Capital Improvements Program Project Input Form

Project Name:	Soyars Booster Pump to McCarty Plane					Project Category:		Water				
Department:	Engineering/ W & WW Utilities					Project Manager:		Engineering				
Project Costs:	Prior Funding	Yr. 03/04	Yr. 04/05	Yr. 05/06	Yr. 06/07	Yr. 07/08	Yr. 08/09	Yr. 09/10	Yr. 10/11	Yr. 11/12	Yr. 12/13	Total
Design/Studies		30,000	-	-	-	-	-	-	-	-	-	30,000
Land/R.O.W.	-	-	-	-	-	-	-	-	-	-	-	-
Construction		250,000										250,000
Equipment	-	-	-	-	-	-	-	-	-	-	-	-
Other Costs	-	-	-	-	-	-	-	-	-	-	-	-
Contingency Funds	-	20,000	-	-	-	-	-	-	-	-	-	20,000
Total		**$300,000**	**$0**	**$0**	**$0**	**$0**	**$0**	**$0**	**$0**	**$0**	**$0**	**$300,000**
Funding Sources:	Prior Funding	Yr. 03/04	Yr. 04/05	Yr. 05/06	Yr. 06/07	Yr. 07/08	Yr. 08/09	Yr. 09/10	Yr. 10/11	Yr. 11/12	Yr. 12/13	Total
Operating Transfer	-	-	-	-	-	-	-	-	-	-	-	-
(Grants)	-	-	-	-	-	-	-	-	-	-	-	-
Revenue Bonds	-	150,000	-	-	-	-	-	-	-	-	-	150,000
Cert. of Obligation	-	-	-	-	-	-	-	-	-	-	-	-
G. O. Bonds	-	-	-	-	-	-	-	-	-	-	-	-
Developer	-	150,000	-	-	-	-	-	-	-	-	-	150,000
Total	**$0**	**$300,000**	**$0**	**$0**	**$0**	**$0**	**$0**	**$0**	**$0**	**$0**	**$0**	**$300,000**

Description and Purpose

Construct a 600gpm booster pumping station at the Soyars Tank site. This booster station will allow the Soyars tank to be used in conjunction with the McCarty tank to supply water to new developments in both the southeast and southwest water service areas. This project was recommended in the Water Master Plan to provide system redundancy and increased capacity to those areas served only on groundwater.

History and Current Status

This project was identified in the Water Master Plan as project # 124.

Operating Budget Impact

Basis for Estimate	2002/03	2003/04	2004/05	2005/06	2006/07	2007/08	2008/09	2009/10	2010/11	2011/12

City of San Marcos
Fiscal Years 2003-2012
Capital Improvements Program Project Input Form

Project Name:	Oak Ridge Capacity Improvements					Project Category:		Water				
Department:	Engineering/ W & WW Utilities					Project Manager:		Engineering				
Project Costs:	Prior Funding	Yr. 03/04	Yr. 04/05	Yr. 05/06	Yr. 06/07	Yr. 07/08	Yr. 08/09	Yr. 09/10	Yr. 10/11	Yr. 11/12	Yr. 12/13	Total
Design/Studies		-	-	13000	-	-	-		-	-	-	13,000
Land/R.O.W.	-	-	-	-	-	-	-		-	-	-	-
Construction				108000								108,000
Equipment	-	-	-		-	-	-		-	-	-	-
Other Costs	-	-	-	-	-	-	-	-	-	-	-	-
Contingency Funds	-		-	9000	-	-	-		-	-	-	9,000
Total		**$0**	**$0**	**$130,000**	**$0**	**$0**	**$0**	**$0**	**$0**	**$0**	**$0**	**$130,000**
Funding Sources:	Prior Funding	Yr. 03/04	Yr. 04/05	Yr. 05/06	Yr. 06/07	Yr. 07/08	Yr. 08/09	Yr. 09/10	Yr. 10/11	Yr. 11/12	Yr. 12/13	Total
Operating Transfer	-	-	-	-	-	-	-	-	-	-	-	-
(Grants)	-	-	-	-	-	-	-	-	-	-	-	-
Revenue Bonds	-	-	-		-	-	-	-	-	-	-	-
Cert. of Obligation	-	-	-	-	-	-	-	-	-	-	-	-
G. O. Bonds	-	-	-	-	-	-	-	-	-	-	-	-
	-	-	-	-	-	-	-	-	-	-	-	-
Total	**$0**	**$0**	**$0**	**$0**	**$0**	**$0**	**$0**	**$0**	**$0**	**$0**	**$0**	**$0**

Description and Purpose

Construct a 500 gpm pump station. Currently, both of the Oak Ridge Pressure Planes do not have adequate capacity to meet TCEQ requiremnets.

History and Current Status

This facility was identified in the Water Master Plan as project #130. The project was also included in the Impact Fee calculations and impact fee revenue could be used if available.

Operating Budget Impact

Basis for Estimate	2002/03	2003/04	2004/05	2005/06	2006/07	2007/08	2008/09	2009/10	2010/11	2011/12

City of San Marcos
Fiscal Years 2003-2012
Capital Improvements Program Project Input Form

Project Name:	Cottonwood 1 MG Elevated Tank					Project Category:		Water				
Department:	Engineering/ W & WW Utilities					Project Manager:		Engineering				
Project Costs:	Prior Funding	Yr. 03/04	Yr. 04/05	Yr. 05/06	Yr. 06/07	Yr. 07/08	Yr. 08/09	Yr. 09/10	Yr. 10/11	Yr. 11/12	Yr. 12/13	Total
Design/Studies		-	-		-	-	-	200,000	-	-	-	200,000
Land/R.O.W.	-	-	-	-	-	-	-		-	-	-	-
Construction								2,063,000				2,063,000
Equipment	-	-	-		-	-	-		-	-	-	-
Other Costs	-	-	-	-	-	-	-	-	-	-	-	-
Contingency Funds	-		-		-	-	-	100,000	-	-	-	100,000
Total		**$0**	**$0**	**$0**	**$0**	**$0**	**$0**	**$2,363,000**	**$0**	**$0**	**$0**	**$2,363,000**
Funding Sources:	Prior Funding	Yr. 03/04	Yr. 04/05	Yr. 05/06	Yr. 06/07	Yr. 07/08	Yr. 08/09	Yr. 09/10	Yr. 10/11	Yr. 11/12	Yr. 12/13	Total
Operating Transfer	-	-	-	-	-	-	-	-	-	-	-	-
(Grants)	-	-	-	-	-	-	-	-	-	-	-	-
Revenue Bonds	-	-	-		-	-	-	2,363,000	-	-	-	2,363,000
Cert. of Obligation	-	-	-	-	-	-	-	-	-	-	-	-
G. O. Bonds	-	-	-	-	-	-	-	-	-	-	-	-
	-	-	-	-	-	-	-	-	-	-	-	-
Total	**$0**	**$0**	**$0**	**$0**	**$0**	**$0**	**$0**	**$2,363,000**	**$0**	**$0**	**$0**	**$2,363,000**

Description and Purpose

Construct a 1,000,000 gallon elevated storage tank along Hwy 123 in the Cottonwood Creek Subdivision. This tank would have an elevation of 155ft. This facility was recommended in the Water Master Plan.

History and Current Status

This facility was identified in the Water Master Plan as project #130. The project was also included in the Impact Fee calculations and impact fee revenue could be used if available.

Operating Budget Impact

Basis for Estimate	2002/03	2003/04	2004/05	2005/06	2006/07	2007/08	2008/09	2009/10	2010/11	2011/12

City of San Marcos
Fiscal Years 2003-2012
Capital Improvements Program Project Input Form

Project Name:	Trunk Hill (936) Storage Tank					Project Category:		Water				
Department:	Engineering/ W & WW Utilities					Project Manager:		Engineering				
Project Costs:	Prior Funding	Yr. 13/14	Yr. 14/15	Yr. 15/16	Yr. 16/17	Yr. 17/18	Yr. 18/19	Yr. 19/20	Yr. 20/21	Yr. 21/22	Yr. 22/23	Total
Design/Studies			-	65,000	-	-	-	-	-	-	-	65,000
Land/R.O.W.	-		-	-	-	-	-	-	-	-	-	-
Construction				575,000								575,000
Equipment	-	-	-	-	-	-	-	-	-	-	-	-
Other Costs	-	-	-	-	-	-	-	-	-	-	-	-
Contingency Funds	-			35,000	-	-	-	-	-	-	-	35,000
Total		**$0**	**$0**	**$675,000**	**$0**	**$0**	**$0**	**$0**	**$0**	**$0**	**$0**	**$675,000**
Funding Sources:	Prior Funding	Yr. 13/14	Yr. 14/15	Yr. 15/16	Yr. 16/17	Yr. 17/18	Yr. 18/19	Yr. 19/20	Yr. 20/21	Yr. 21/22	Yr. 22/23	Total
Operating Transfer	-	-	-	-	-	-	-	-	-	-	-	-
(Grants)	-	-	-	-	-	-	-	-	-	-	-	-
Revenue Bonds	-	-		-	-	-	-	-	-	-	-	-
Cert. of Obligation	-	-	-	-	-	-	-	-	-	-	-	-
G. O. Bonds	-	-	-	-	-	-	-	-	-	-	-	-
Other	-	-	-	-	-	-	-	-	-	-	-	-
Total	**$0**	**$0**	**$0**	**$0**	**$0**	**$0**	**$0**	**$0**	**$0**	**$0**	**$0**	**$0**

Description and Purpose

Construct 1 0.5 MG tank with an overflow of 936' msl. The tank would be fed from the Soyars pump station and associated pipelines. The tank would increase the elevated storage capacity in the SWTP Upper pressure plane to 1.5 MG, which would allow for 15,000 total connections.

History and Current Status

Operating Budget Impact

Basis for Estimate	2002/03	2003/04	2004/05	2005/06	2006/07	2007/08	2008/09	2009/10	2010/11	2011/12

City of San Marcos
Fiscal Years 2003-2012
Capital Improvements Program Project Input Form

Project Name:	Technology Way Ground Storage w/ Fire Pump					Project Category:		Water				
Department:	Engineering/ W & WW Utilities					Project Manager:		Engineering				
Project Costs:	Prior Funding	Yr. 03/04	Yr. 04/05	Yr. 05/06	Yr. 06/07	Yr. 07/08	Yr. 08/09	Yr. 09/10	Yr. 10/11	Yr. 11/12	Yr. 12/13	Total
Design/Studies		-	40,000		-	-	-		-	-	-	40,000
Land/R.O.W.	-	-	-	-	-	-	-		-	-	-	-
Construction			440,000									440,000
Equipment	-	-	-		-	-	-		-	-	-	-
Other Costs	-	-	-	-	-	-	-	-	-	-	-	-
Contingency Funds	-		20,000		-	-	-		-	-	-	20,000
Total		**$0**	**$500,000**	**$0**	**$0**	**$0**	**$0**	**$0**	**$0**	**$0**	**$0**	**$500,000**
Funding Sources:	Prior Funding	Yr. 03/04	Yr. 04/05	Yr. 05/06	Yr. 06/07	Yr. 07/08	Yr. 08/09	Yr. 09/10	Yr. 10/11	Yr. 11/12	Yr. 12/13	Total
Operating Transfer	-	-	-	-	-	-	-	-	-	-	-	-
(Grants)	-	-	-	-	-	-	-	-	-	-	-	-
Revenue Bonds	-	-	-		-	-	-	-	-	-	-	-
Cert. of Obligation	-	-	-	-	-	-	-	-	-	-	-	-
G. O. Bonds	-	-	-	-	-	-	-	-	-	-	-	-
	-	-	-	-	-	-	-	-	-	-	-	-
Total	**$0**	**$0**	**$0**	**$0**	**$0**	**$0**	**$0**	**$0**	**$0**	**$0**	**$0**	**$0**

Description and Purpose

Relocation of the Butler ground storage tank and pump station to the industrial park on Technology Way. The relocation of the Butler ground storage tank and pump station would allow the city to provide fire protection service consistent with current commitments. The agreement requires the City to provide 3,000 gpm with a residual pressure of 75 psi to the industrial park.

History and Current Status

This facility was identified in the Water Master Plan as project #130. The project was also included in the Impact Fee calculations and impact fee revenue could be used if available.

Operating Budget Impact

Basis for Estimate	2002/03	2003/04	2004/05	2005/06	2006/07	2007/08	2008/09	2009/10	2010/11	2011/12